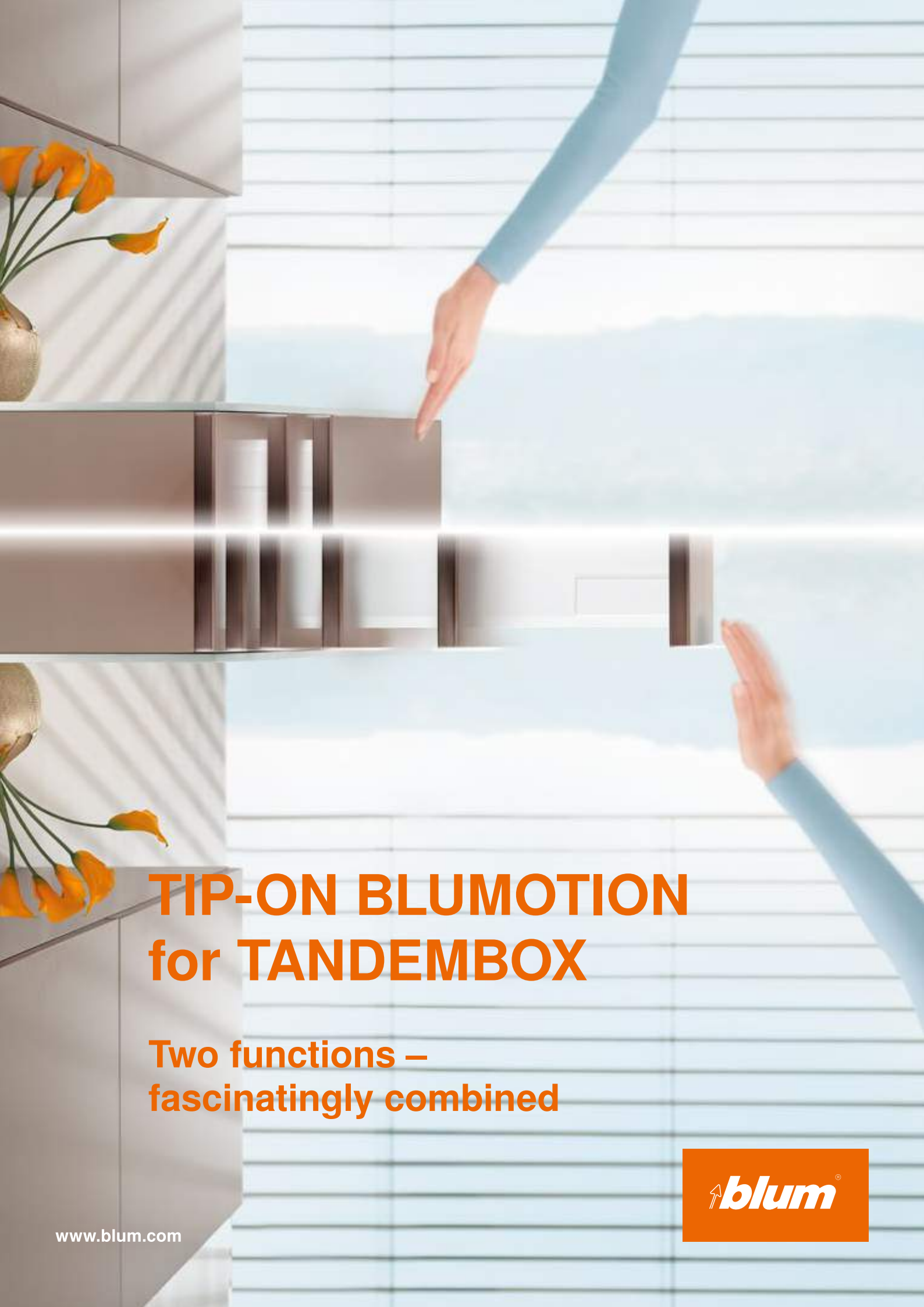

TIP-ON BLUMOTION for TANDEMBOX

Two functions – fascinatingly combined

www.blum.com

Contents

04 Innovative technology

06 Fascinating combination

08 High functionality

10 Extra convenience guaranteed

12 Optimised box system

14 Easy assembly

16 TIP-ON BLUMOTION for all living areas

24 Well-designed product details

26 moving ideas

Innovative technology

The focus of all our product development: our furniture users' many different needs
The result: a solution that provides optimal support for motion – 100 % mechanically.
TIP-ON BLUMOTION for TANDEMBOX combines the advantages of the TIP-ON mechanical opening support system with reliable BLUMOTION dampening for silent and effortless closing.

Watch TIP-ON BLUMOTION film:
www.blum.com/trailertiponblumotion

Fascinating combination

Opens with just a light touch, has a smooth running action and closes silently and effortlessly – experience completely harmonious and convenient motion with TIP-ON BLUMOTION technology for TANDEMBOX. And the best part: the motion is assisted 100 % mechanically.

A simple touch,

and the pull-out opens.

A light push, and it closes.

High functionality

The extensive trigger range of TIP-ON BLUMOTION for TANDEMBOX provides inspirational ease of use for handle-less pull-outs and drawers. An optional synchronisation can be used to extend the trigger range even further.

Small front gap

TIP-ON BLUMOTION can be adjusted to have a small front gap of 2.5 mm, meaning it is also ideal for kitchens.

Four-dimensional adjustment

The four-dimensional adjustment ensures a precise gap layout. The integrated depth adjustment can be made tool-free using the adjustment wheel.

Intelligent mechanics

TIP-ON BLUMOTION is more user-friendly and gives you a choice: pull or push to open.

Extra convenience guaranteed

With TIP-ON BLUMOTION, it is possible to refine any design concept with well-thought-out functionality – particularly if the design of the furniture avoids the use of handles completely, or if handle elements are being used for accentuation purposes. Once fitted with TIP-ON BLUMOTION, all pull-outs will have one thing in common: their ease of use will be extra impressive.

Pull-outs with j-handles
Individual design with integrated TIP-ON BLUMOTION: simple and ergonomic opening of pull-outs with a light touch even when your hands are full.

Pull-outs with handles as a design element
Sometimes, handles simply give furniture that extra something. TIP-ON BLUMOTION supports special design ideas by adding more functionality.

Pull-outs with recessed grips
TIP-ON BLUMOTION makes it easier to open pull-outs with recessed grips: a light touch is all that is needed, anywhere on the pull-out, thanks to the extensive trigger range.

Optimised box system

TANDEMBOX has been impressing users with its high ease of use and wide range of available design options for many years. Over the course of the development of TIP-ON BLUMOTION for TANDEMBOX, some of the main functions of the existing system were also optimised and tangibly improved.

Easy opening
Lower opening forces and an even smoother transition to the feather-light glide improve performance from the moment you open the pull-out.

Quality to the touch
You can feel the increased stability provided by the combination of the optimised drawer side and new front fixing bracket.

Optimised feather-light glide
Components in the drawer side and cabinet profile have been further developed to optimise the feather-light glide of TANDEMBOX and the smooth running action.

Easy assembly

TIP-ON BLUMOTION for TANDEMBOX is the perfect mechanical solution for handle-less furniture in all living areas.
Pull-outs and drawers can beimplemented in the usual manner.

No additional cabinet and drawer assembly
TIP-ON BLUMOTION can be used with standard cabinets and fronts. There is no need for additional assembly, e.g. for recessed grips or handle strips.

Easy assembly and adjustment
Like most components, the TIP-ON BLUMOTION unit is assembled tool-free.

Optional synchronisation
From a cabinet width of 300 mm, the motion is improved through the use of optional synchronisation. Assembly is carried out tool-free.

Precise front gap adjustment
The front gap can be conveniently adjusted to 2.5 mm using the gap checking/adjustment template, regardless of whether the front is installed already.

TIP-ON BLUMOTION in the kitchen

Everyday kitchen use places extremely high demands on a piece of furniture's quality of motion. TIP-ON BLUMOTION for TANDEMBOX provides inspiration here with its undeniable ease of use.

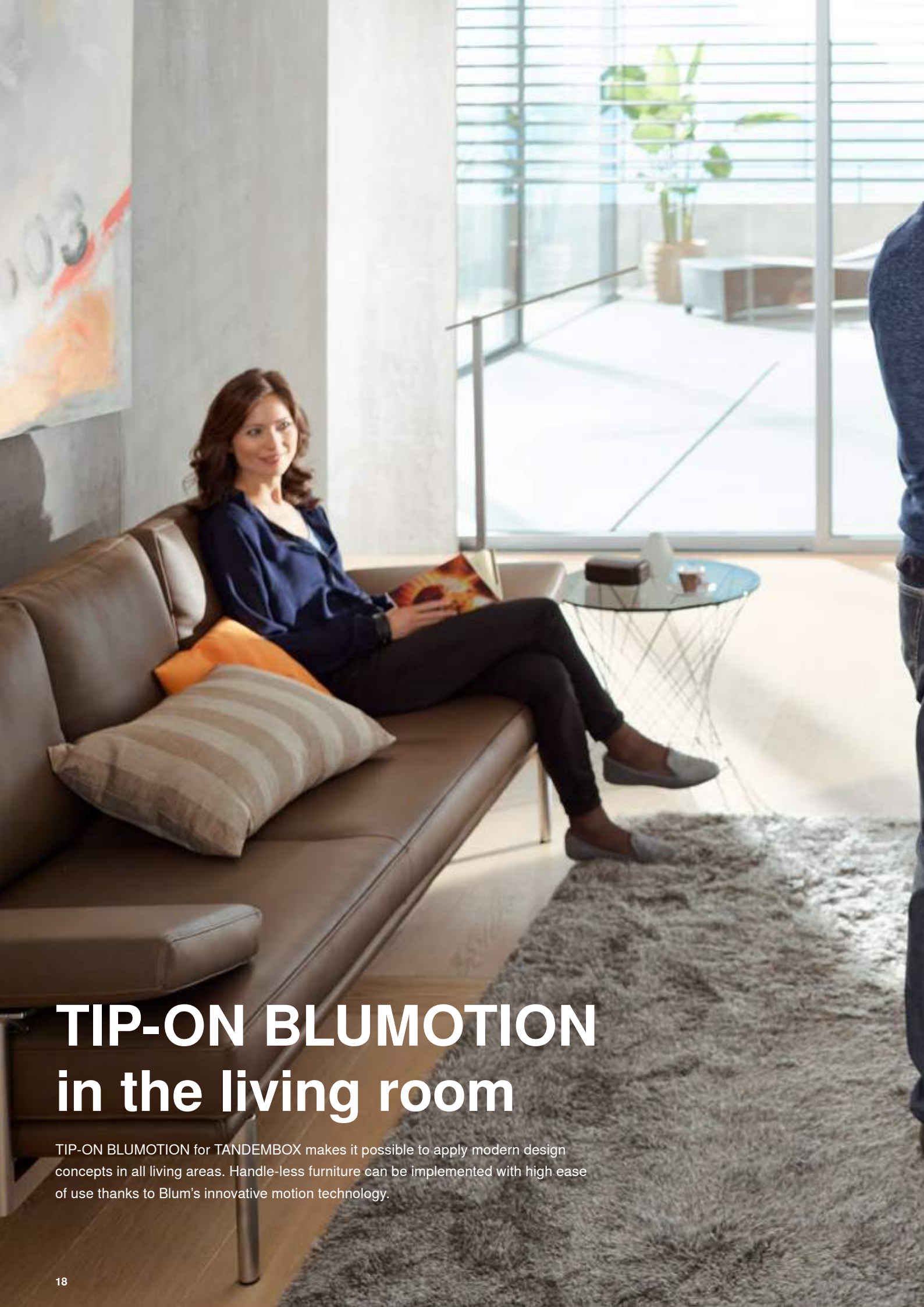

TIP-ON BLUMOTION in the living room

TIP-ON BLUMOTION for TANDEMBOX makes it possible to apply modern design concepts in all living areas. Handle-less furniture can be implemented with high ease of use thanks to Blum's innovative motion technology.

TIP-ON BLUMOTION in the bathroom

TIP-ON BLUMOTION also ensures high quality of motion in the bathroom for the lifetime of the furniture. The zinc-plated steel and plastic components offer optimum corrosion protection even in high levels of humidity.

TIP-ON BLUMOTION in the hall

With TIP-ON BLUMOTION for TANDEMBOX, handle-less furniture can be implemented in all living areas, including the hall. With an impressively smooth running action, even high and wide fronts can be opened with just a light touch and close silently and effortlessly.

Well-designed product details

TIP-ON BLUMOTION is based on the specially designed TANDEMBOX cabinet profile. Varying nominal lengths and weight ranges can be achieved with different TIP-ON BLUMOTION units. All other components can be used universally. This means that TIP-ON BLUMOTION is a suitable solution for any application.

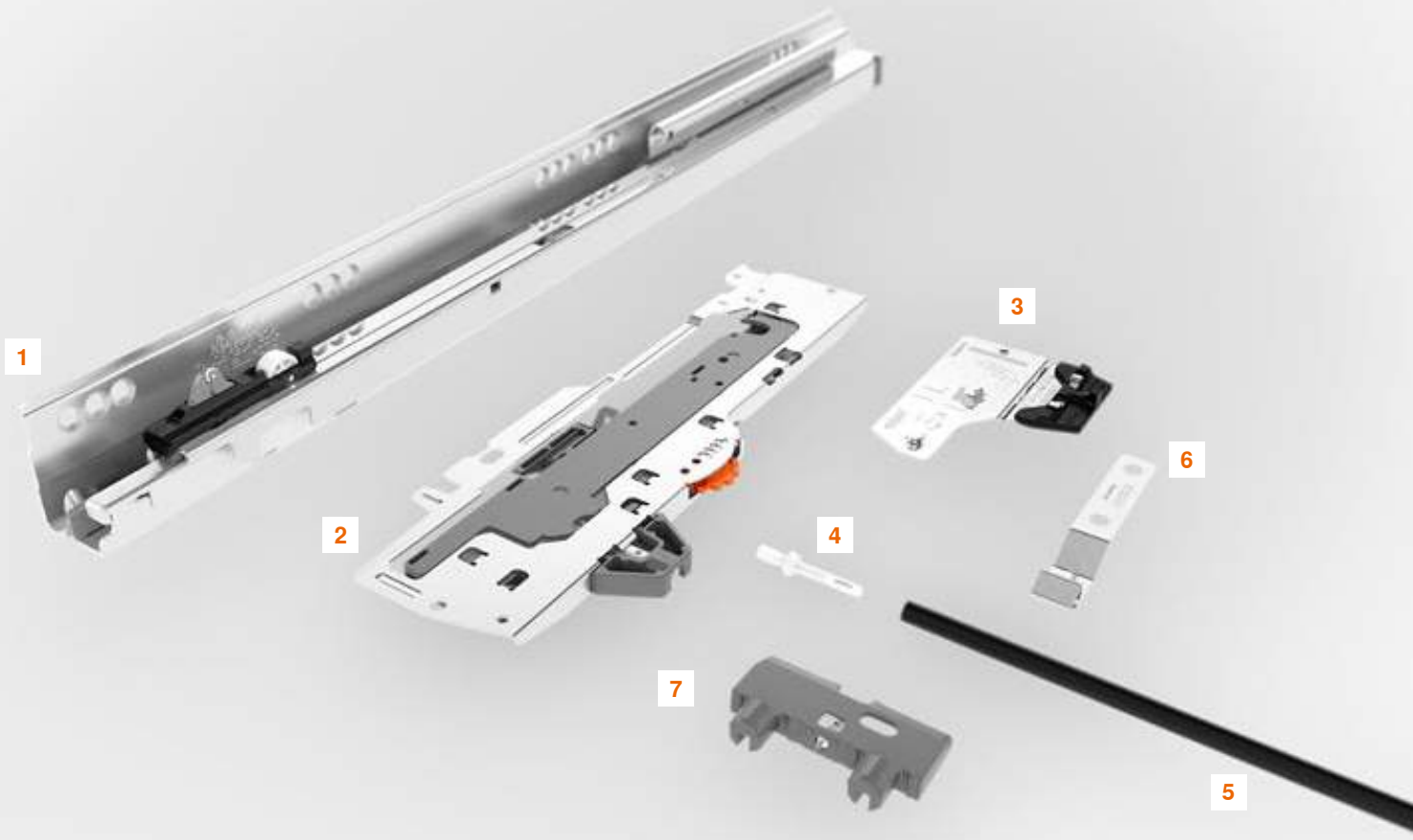

TIP-ON BLUMOTION components

1. TIP-ON BLUMOTION TANDEMBOX cabinet profile
2. TIP-ON BLUMOTION unit
3. TIP-ON BLUMOTION latch
4. TIP-ON BLUMOTION synchronisation adapter
5. TIP-ON BLUMOTION synchronisation linkage
6. TIP-ON BLUMOTION support for synchronisation linkage (required for cabinet widths of 750 mm and above)
7. Base support bracket (required for cabinet widths of 750 mm and above)

TIP-ON BLUMOTION units and TIP-ON BLUMOTION latch

Different models of the TIP-ON BLUMOTION unit are available to suit different weight ranges and nominal lengths.
For easy differentiation, each version is a different colour. The latch can be universally used for all TIP-ON BLUMOTION units.

S0
≤ 10 kg
NL 270 – 300 mm
White

S1
> 10 – 20 kg
NL 270 – 300 mm
Light grey

L1
≤ 20 kg
NL 350 –600 mm
Light grey

L3
15 – 40 kg
NL 350 –600 mm
Dust grey

L5
35 – 65 kg
NL 450 – 650 mm
Black

TIP-ON BLUMOTION latch

Fittings selection made
easy with the online
Product Configurator at
www.blum.com/configurator

moving ideas

We believe that ideas can move the world. We offer innovative fittings, inspiring furniture concepts and appropriate services so that you can turn your creative ideas into reality. We are driven by your needs, international trends and our shared vision of a better quality of living. Let us work together to create moving ideas.

Quality of living

We would like you to enjoy greater convenience and functionality when using furniture.

Product range

Everything from a single source: our wide range of products allows you to keep up with today's and tomorrow's trends.

Inspiration

We monitor global trends and strive to create the solutions of tomorrow. We like to share our insights with you.

Innovation

We stay in motion. Curiosity and pioneering spirit drive us to develop new products and services for you.

Services

We support your daily operations with customised services tailored to your processes.

Quality

We continuously strive to improve our products, services and ourselves.

Trust

We take responsibility for partnerships, our employees, society and the environment.

Julius Blum started our journey in 1952 with horseshoe studs. Today we supply innovative fittings to customers in over 120 countries.

Look for our FSC™-certified products

FSC
www.fsc.org
FSC™ C115115

All content is copyrighted by Blum.
Subject to technical modifications and changes to the range without notice.
IDNR: 000.000.0 · EP-277/7 EN-TH/03.23

Blue International Co.,Ltd.
8,10,12 Soi Ramkhamhaeng 26/1
Ramkhamhaeng
Rd., Huamark, Bangkapi
BANGKOK 10240
THAILAND
Tel: +66 2 374 7755
Fax: +66 2 374 9176
E-Mail: info@blue-inter.com
www.blum.com

Julius Blum GmbH
Furniture Fittings Mfg.
6973 Höchst, Austria
Tel.: +43 5578 705-0
Fax: +43 5578 705-44
E-mail: info@blum.com
www.blum.com

Our sites in Austria, Poland and China are certified to the international standards mentioned below.
Our site in the USA is certified to ISO 9001.
Our site in Brazil is certified to ISO 9001, ISO 14001 and ISO 45001.

ISO 9001 Certified Quality System
ISO 14001 Certified Environmental System
ISO 50001 Certified Energy System

blum®