AVENTOS

Mitred and rebated applications

www.blum.com

blum®

An inspiring range of lift systems

The fascinating quality of motion offered by AVENTOS lift systems is now also available for wall cabinets designed with mitres or rebates. The practical aspect of it is that you only need to make minor adjustments to position to be able to use standard fittings. Thanks to the new application options, you can implement the latest design ideas with ease.

Mitred applications

AVENTOS HF – bi-fold lift system

AVENTOS HS – up & over lift system

AVENTOS HL – lift up

AVENTOS HK top – stay lift

Rebated applications

AVENTOS HF – bi-fold lift system

AVENTOS HS – up & over lift system

AVENTOS HL – lift up

AVENTOS HK top – stay lift

Lift systems are particularly convenient as they give users full freedom of movement, keeping fronts well out of their way. AVENTOS lift systems also stay open in any position desired and are therefore always within easy reach for closing. Extra convenience is provided by the SERVO-DRIVE or TIP-ON opening support systems.

Content

04 AVENTOS HF

08 AVENTOS HS

12 AVENTOS HL

16 AVENTOS HK top

20 Motion technologies

AVENTOS HF

AVENTOS HF
Symmetrical wooden fronts

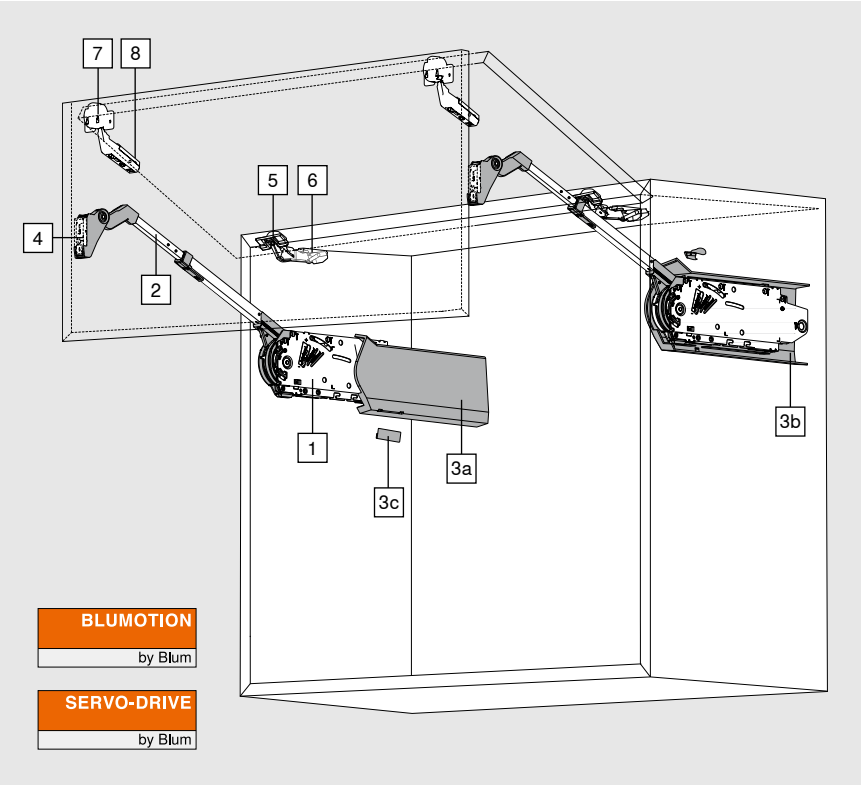

The AVENTOS HF bi-fold lift system is the ideal solution for high and mid height wall cabinets. Thanks to the bi-fold front, little space is needed above the cabinet. Even tall cabinets are possible. In other words, you can choose from a wide selection of wall cabinet designs.

Mitred and rebated applications are not standard applications and that is why you need:

- CLIP top 155° hinge
- 104° opening angle stop
- Mounting plate with 6 mm spacing (only for rebated fronts)

Power factor (LF) = cabinet height (KH) [mm] x front weight incl. double handle weight [kg]

Ordering information

1		Lift mechanism set	
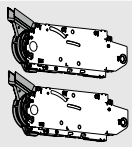		**Power factor LF**	
		2600–5500 (1 pc LF 960–2650)	**20F2200.05**
		5350–10150	**20F2500.05**
		9000–17250 (3 pcs LF 13500–25900)	**20F2800.05**
Consisting of:			
1	2 x	Symmetrical lift mechanism	
-	8 x	Chipboard screws Ø 4 x 35 mm	

3		Cover cap set		
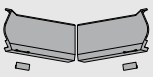		**Colour**	**Material**	
		HGR, SW, TGR	Nylon	**20F8020**
Consisting of:				
3a	1 x	Large cover cap left		
3b	1 x	Large cover cap right		
3c	2 x	Branding element, stamped with Blum logo		
		IN-G		

2		Telescopic arm set	
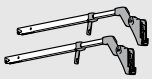		**Cabinet height KH (mm)**	
		480–570	**20F3200.01**
		560–710	**20F3500.01**
		700–900	**20F3800.01**
		760–1040	**20F3900.01**
Consisting of:			
2	2 x	Symmetrical telescopic arm	

4			
	Mounting plate for telescopic arm		
	Recommendation:		
	Fixing method	**Spacing (mm)**	
	Screw-on [1]	0	**175H3100**
	EXPANDO	0	**177H3100E**
	Knock-in	0	**177H3100**

All horizontal steel mounting plates with 0 mm spacing can be used

Ordering information

5	CLIP top 155° hinge		
	Boss	**Spring**	
	INSERTA	Unsprung	☎
	Screw-on [1]	Unsprung	70T7650.NL
3 hinges starting at cabinet width KB 1200 mm and/or 12 kg front weight			
4 hinges for cabinet width KB 1800 mm and/or starting at 20 kg front weight			

6	Mounting plate for CLIP top 155° hinge		
	Mitred application recommendation:		
	Fixing method	**Spacing (mm)**	
	Screw-on [1]	0	175H3100
	EXPANDO	0	177H3100E
	Knock-in	0	177H3100
	Rebated application recommendation:	
	Fixing method	**Spacing (mm)**	
	Screw-on [2]	6	175H9160
Standard mounting plates, spacing depends on the upper front overlay			

7	CLIP top centre hinge		
	Boss	**Spring**	
	Screw-on [1]	Unsprung	78Z5500T
	EXPANDO	Unsprung	78Z553ET
3 hinges starting at cabinet width KB 1200 mm and/or 12 kg front weight			
4 hinges for cabinet width KB 1800 mm and/or starting at 20 kg front weight			

8	Mounting plate for CLIP top centre hinge		
	Recommendation:		
	Fixing method	**Spacing (mm)**	
	Screw-on [1]	0	175H3100
	EXPANDO	0	177H3100E
	Knock-in	0	177H3100
Standard mounting plates with 0 mm spacing			

Accessories

-	Opening angle stop		
	Opening angle	**Colour**	
	104°	TGR	20F7051
	83°	R7037	20F7011

Colour	
HGR	Light grey
SW	Silk white
TGR	Dark grey
R7037	RAL 7037 dust grey
IN-G	In-mould brushed stainless steel

Information

SERVO-DRIVE planning 20

For SERVO-DRIVE ordering information see AVENTOS general brochure

www.blum.com/aventosbrochure

[1] Use 2 chipboard screws (609.1x00) per side for wooden fronts.

[2] Use Ø 6 x 14.5 mm system screws (661.1450).

AVENTOS HF
Symmetrical wooden fronts

Planning

Continuous (four sided) mitred applications

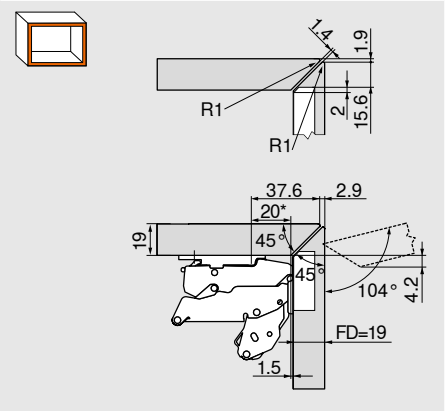

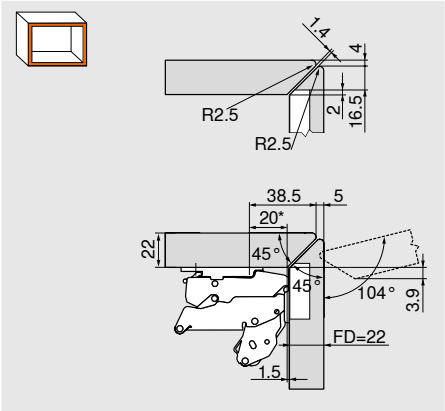

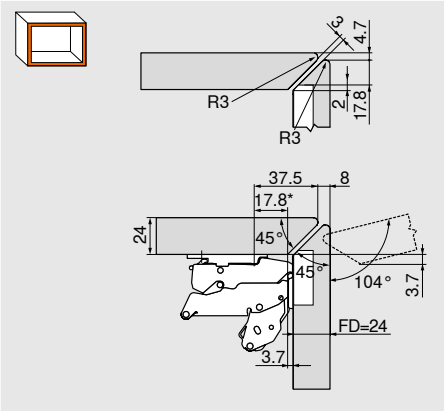

Hinge for dual applications

0 mm mounting plate

Lateral (two sided) mitred applications

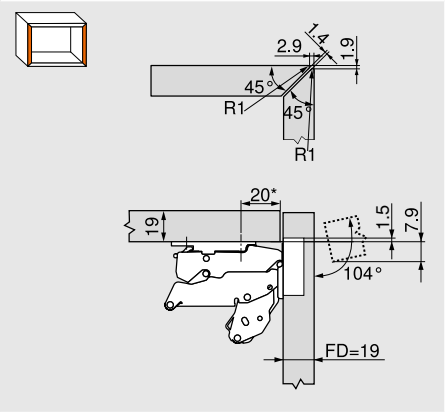

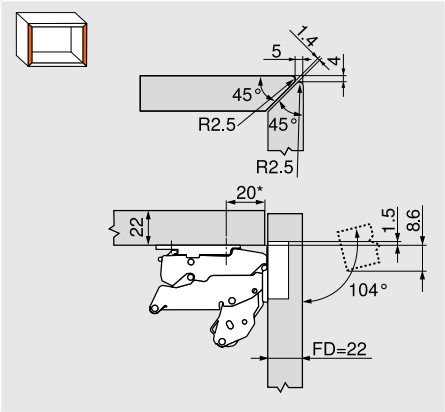

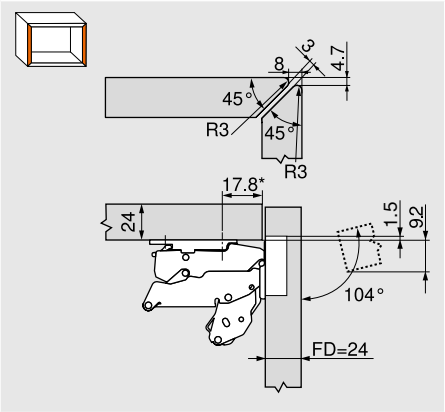

Hinge for dual applications

0 mm mounting plate

Rebated applications

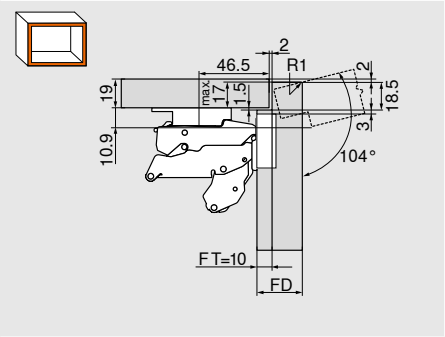

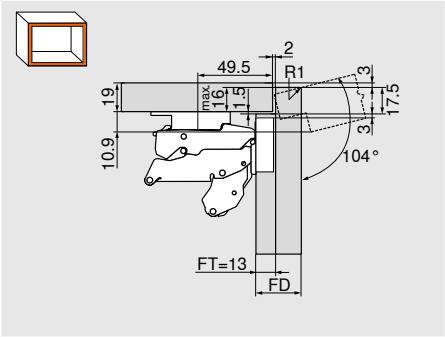

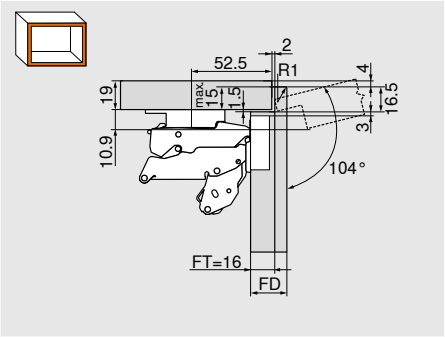

Hinge for dual applications

6 mm mounting plate

FD	Front thickness
FT	Rebate depth
R	Radius
*	Dimension for mounting plate with dimension A = 20 mm

Planning

Drilling position

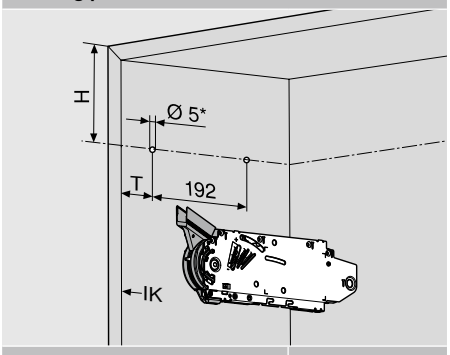

Cabinet height KH (mm)	H (mm)
480–549	KH x 0.3 - 28
550–1040	KH x 0.3 - 57

4 x chipboard screws Ø 4 x 35 mm

T **Mitre:**
37 mm from IK for front thickness FD 19 to 22 mm
34.8 mm from IK for front thickness FD 24 mm

Rebate:
37 mm + rebate depth FT from IK

IK Cabinet inner edge

FT Rebate depth

* Drilling depth 5 mm

Space requirement

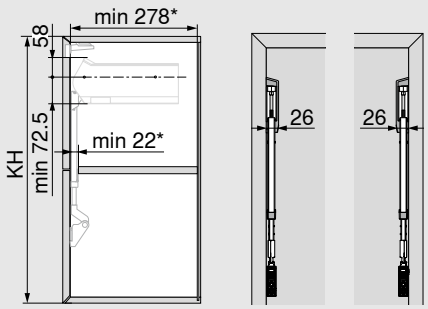

KH Cabinet height

FT Rebate depth

* For rebated application + rebate depth FT

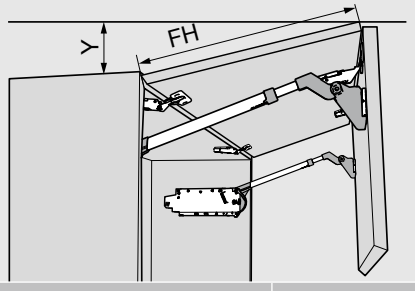

Opening angle stop	Y (mm)
104°	FH x 0.24 + 34
83°	0

FH Front height

Front assembly

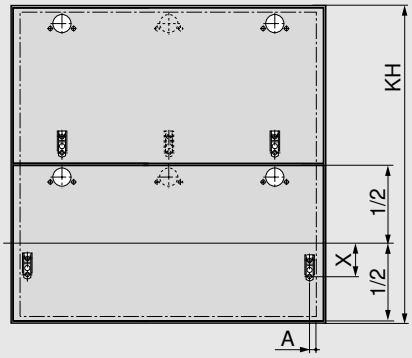

A **Mitre:**
12 mm from front inner edge

Rebate:
11 mm from front inner edge

Cabinet height KH (mm)	X (mm)
	177H3100 177H3100E 177H3100E10 177H5100 175H3100 175H4100
480–549	70
550–1040	47

CLIP top centre hinge

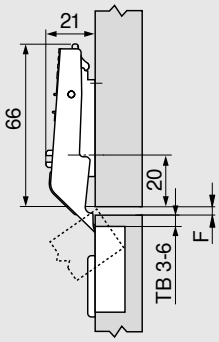

F Min. gap 1.5 mm

Drilling distance TB

MD	Horizontal gap F between fronts (mm)			
	3	4	5	6
0	6	5	4	3
3				
6				
9				

MD Mounting plate spacing (mm)

Space requirement Cornice/Crown moulding

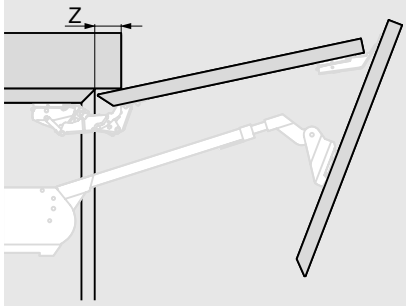

Mitred application									
FD (mm)	19	22	24						
Z (mm)	40	34	33						
Rebated application									
FT (mm)	10			13			16		
FD (mm)	19	22	25	19	22	25	19	22	25
Z (mm)	70	58	45	67	55	42	64	52	39

FD Front thickness

FT Rebate depth

AVENTOS HS

AVENTOS HS

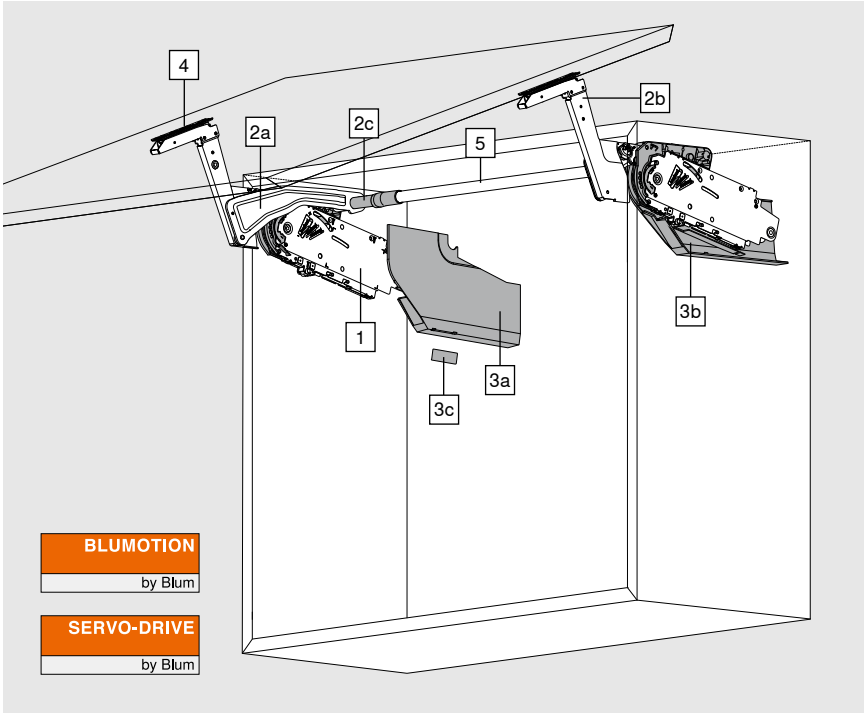

Even large, one-part fronts swing up and over with gravity-defying ease with AVENTOS HS. And there is enough space for design features such as crown mouldings or cornices.

To select the correct lift mechanism, you need to know the cabinet height and the weight of the front (including the handle).

Example
Cabinet height KH = 600 mm
Weight of front = 10 kg
Lift mechanism = **20S2E00.05**

Cabinet height KH = 602 mm –> 600 mm
Cabinet height KH = 603 mm –> 605 mm

We recommend the more powerful lift mechanism for applications in overlapping ranges.

Ordering information

1 **Lift mechanism set**

KH (mm)	Cabinet height KH 350-525 mm			KH (mm)	Cabinet height KH 526-675 mm			KH (mm)	Cabinet height KH 676-800 mm		
	20S2A00.05	20S2B00.05	20S2C00.05		20S2D00.05	20S2E00.05	20S2F00.05		20S2G00.05	20S2H00.05	20S2I00.05
	Weight of front incl. handle (kg)				Weight of front incl. handle (kg)				Weight of front incl. handle (kg)		
350	2.00–5.00	4.50–9.50	9.25–10.50	**526**	3.00–6.75	6.25–13.00	12.00–16.50	**676**	3.50–8.00	7.00–13.50	13.00–21.50
355	2.00–4.75	4.50–9.50	9.25–10.50	**530**	3.00–6.75	6.25–12.75	11.75–16.75	**680**	3.50–8.00	7.00–13.50	13.00–21.50
360	2.00–4.75	4.50–9.50	9.25–10.75	**535**	3.00–6.75	6.25–12.75	11.75–16.75	**685**	3.50–8.00	7.00–13.25	12.75–21.50
365	2.00–4.75	4.50–9.25	9.00–11.00	**540**	3.00–6.50	6.00–12.75	11.75–17.00	**690**	3.50–7.75	6.75–13.25	12.75–21.50
370	2.00–4.75	4.50–9.25	9.00–11.00	**545**	3.00–6.50	6.00–12.50	11.50–17.25	**695**	3.50–7.75	6.75–13.25	12.50–21.50
375	2.00–4.75	4.50–9.25	9.00–11.25	**550**	3.00–6.50	6.00–12.50	11.50–17.25	**700**	3.50–7.75	6.75–13.25	12.50–21.50
380	2.00–4.75	4.50–9.25	9.00–11.25	**555**	3.00–6.50	6.00–12.50	11.50–17.50	**705**	3.50–7.75	6.75–13.25	12.25–21.50
385	2.00–4.75	4.50–9.25	9.00–11.50	**560**	3.00–6.50	6.00–12.25	11.25–17.50	**710**	3.50–7.75	6.75–13.25	12.25–21.25
390	2.00–4.75	4.50–9.00	8.75–11.50	**565**	3.00–6.25	5.75–12.25	11.25–17.75	**715**	3.50–7.50	6.75–13.00	12.00–21.25
395	2.00–4.75	4.50–9.00	8.75–11.75	**570**	3.00–6.25	5.75–12.25	11.25–17.75	**720**	3.50–7.50	6.75–13.00	12.00–21.25
400	2.00–4.75	4.25–9.00	8.75–12.00	**575**	3.00–6.25	5.75–12.00	11.00–18.00	**725**	3.50–7.50	6.75–13.00	12.00–21.00
405	2.25–4.50	4.25–9.00	8.75–12.00	**580**	3.00–6.25	5.75–12.00	11.00–18.00	**730**	3.50–7.50	6.75–13.00	11.75–21.00
410	2.25–4.50	4.25–9.00	8.75–12.25	**585**	3.00–6.25	5.75–12.00	10.75–18.25	**735**	3.50–7.50	6.50–13.00	11.75–20.75
415	2.25–4.50	4.25–8.75	8.50–12.50	**590**	3.00–6.00	5.50–12.00	10.75–18.25	**740**	3.50–7.25	6.50–12.75	11.75–20.75
420	2.25–4.50	4.25–8.75	8.50–12.50	**595**	3.00–6.00	5.50–11.75	10.50–18.50	**745**	3.50–7.25	6.50–12.75	11.50–20.50
425	2.25–4.50	4.25–8.75	8.50–12.75	**600**	3.00–6.00	5.50–11.75	10.50–18.50	**750**	3.50–7.25	6.50–12.75	11.50–20.50
430	2.25–4.50	4.25–8.75	8.50–12.75	**605**	3.00–6.00	5.50–11.75	10.50–18.50	**755**	3.75–7.25	6.50–12.75	11.25–20.50
435	2.25–4.50	4.25–8.75	8.50–13.00	**610**	3.00–6.00	5.50–11.75	10.50–18.50	**760**	3.75–7.25	6.50–12.75	11.25–20.25
440	2.25–4.50	4.25–8.50	8.25–13.00	**615**	3.00–5.75	5.50–11.50	10.25–18.75	**765**	3.75–7.25	6.50–12.50	11.00–20.25
445	2.25–4.50	4.25–8.50	8.25–13.25	**620**	3.00–5.75	5.50–11.50	10.25–18.75	**770**	3.75–7.00	6.25–12.50	11.00–20.25
450	2.25–4.25	4.00–8.50	8.25–13.50	**625**	3.00–5.75	5.50–11.50	10.25–18.75	**775**	3.75–7.00	6.25–12.50	11.00–20.25
455	2.25–4.25	4.00–8.50	8.25–13.50	**630**	3.00–5.75	5.50–11.50	10.25–18.75	**780**	4.00–7.00	6.25–12.50	10.75–20.25
460	2.25–4.25	4.00–8.25	8.00–13.75	**635**	3.00–5.50	5.25–11.50	10.25–18.75	**785**	4.00–7.00	6.25–12.50	10.75–20.00
465	2.25–4.25	4.00–8.25	8.00–13.75	**640**	3.00–5.50	5.25–11.25	10.00–18.75	**790**	4.00–7.00	6.00–12.25	10.75–20.00
470	2.50–4.25	4.00–8.25	8.00–14.00	**645**	3.00–5.50	5.25–11.25	10.00–18.75	**795**	4.00–7.00	6.00–12.25	10.50–20.00
475	2.50–4.25	3.75–8.00	7.75–14.00	**650**	3.00–5.50	5.25–11.25	10.00–19.00	**800**	4.00–7.00	6.00–12.25	10.50–20.00
480	2.50–4.25	3.75–8.00	7.75–14.25	**655**	3.00–5.50	5.25–11.25	10.00–19.00				
485	2.50–4.25	3.75–8.00	7.75–14.25	**660**	3.00–5.50	5.25–11.25	10.00–19.00				
490	2.50–4.25	3.75–8.00	7.75–14.50	**665**	3.00–5.25	5.00–11.00	09.75–19.00				
495	2.50–4.25	3.75–7.75	7.50–14.50	**670**	3.00–5.25	5.00–11.00	09.75–19.00				
500	2.50–4.25	3.50–7.75	7.50–14.75	**675**	3.00–5.25	5.00–11.00	09.75–19.00				
505	2.50–4.00	3.50–7.75	7.50–14.75								
510	2.50–4.00	3.50–7.75	7.50–14.75								
515	2.50–4.00	3.50–7.50	7.25–14.75								
520	2.50–4.00	3.50–7.50	7.25–15.00								
525	2.50–4.00	3.25–7.50	7.25–15.00								

Consisting of:

1	2 x	Symmetrical lift mechanism
-	10 x	Chipboard screws Ø 4 x 35 mm

AVENTOS HS

Ordering information

2	Lever arm set		
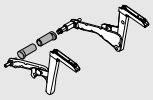	**Colour**	**Material**	
	Nickel plated	Steel	**20S3500.06**
Consisting of:			
2a	1 x	Lever arm left	
2b	1 x	Lever arm right	
2c	2 x	Cross stabiliser cover cap	

3	Cover cap set		
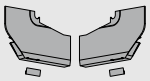	**Colour**	**Material**	
	HGR, SW, TGR	Nylon	**20S8020**
Consisting of:			
3a	1 x	Large cover cap left	
3b	1 x	Large cover cap right	
3c	2 x	Branding element, stamped with Blum logo	
		IN-G	

4	Front fixing bracket set	
	Version	
	Wooden fronts [1]	**20S4200**

[1] Use 4 chipboard screws (609.1x00) per side for wooden fronts.

5	Round cross stabiliser rod		
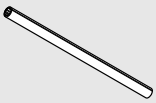	**Diameter (mm)**	**Length (mm)**	
	Ø 16	1061	**20Q1061UN**
For cutting to size			
Cutting	Internal cabinet width LW - 129 mm		

-	Connecting piece set for cross stabiliser		
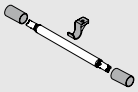	**From internal cabinet width LW 1190 mm**		
	Diameter (mm)	**Material**	
	Ø 16	Aluminium	**20Q153ZN**
Consisting of:			
-	1 x	Connecting piece	
-	1 x	Fixing	
-	2 x	Cross stabiliser cover cap	
Cutting for 5	Internal cabinet width LW / 2 - 147 mm		

Colour	
HGR	Light grey
SW	Silk white
TGR	Dark grey
IN-G	In-mould brushed stainless steel

Information

SERVO-DRIVE planning	20

For SERVO-DRIVE ordering information see AVENTOS general brochure

www.blum.com/aventosbrochure

AVENTOS HS

Planning

Mitred application

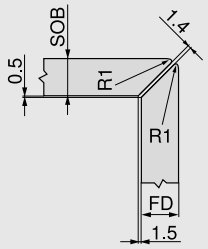

SOB Top panel thickness

FD Front thickness

R Radius

Rebated application

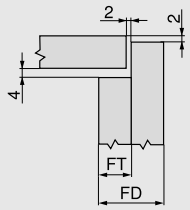

FD Front thickness

FT Rebate depth

Drilling position

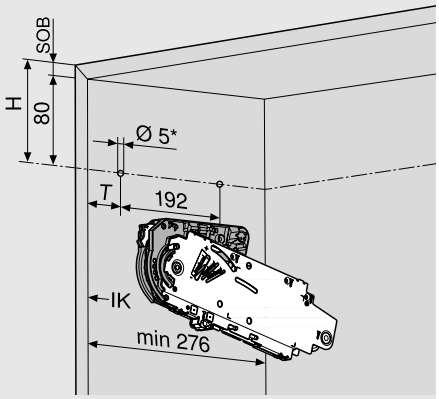

5 x chipboard screws Ø 4 x 35 mm

T **Mitre:** 37 mm from cabinet inner edge IK
Rebate: 37 mm + rebate depth FT from IK

IK Cabinet inner edge

SOB Top panel thickness

* Drilling depth 5 mm

Space requirement

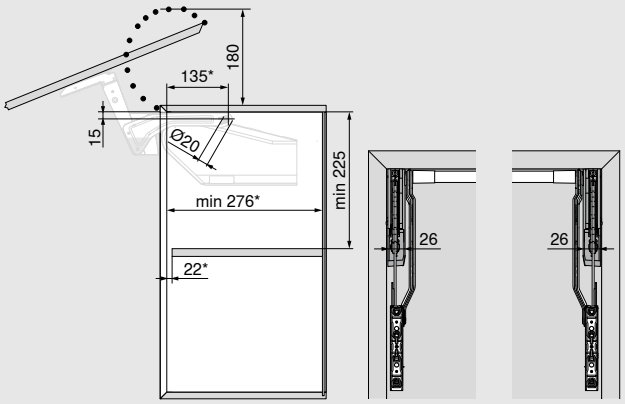

* For rebated application + rebate depth FT

FT Rebate depth

Front assembly

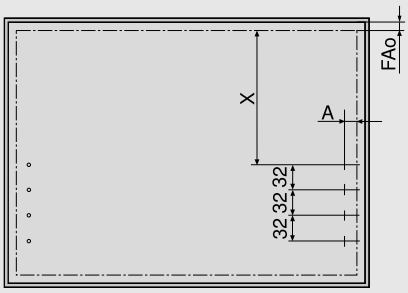

FAo Upper front overlay

A Distance from front inner edge
Mitre: 12 mm
Rebate: 8.5 mm

X Distance from front inner edge
Mitre: 96 mm
Rebate: 92.5 mm

Application adjacent to wall: Requires 5 mm minimum gap

Use 4 chipboard screws (609.1x00) per side for wooden fronts.

Front setting

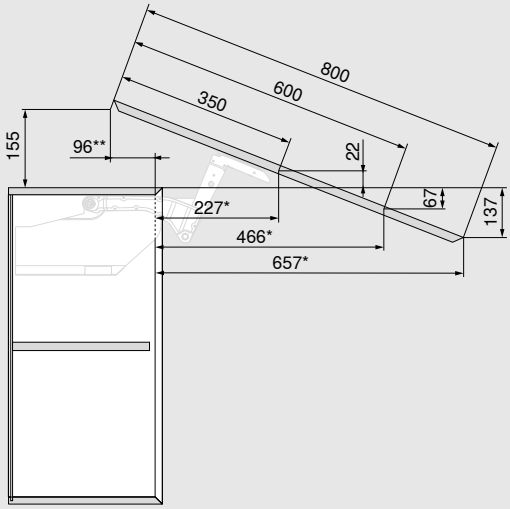

* For rebated application - rebate depth FT

** For rebated application + rebate depth FT

Dimensions depend on tilt adjustment and front thickness

AVENTOS HS

Planning

Space requirement Cornice/Crown moulding

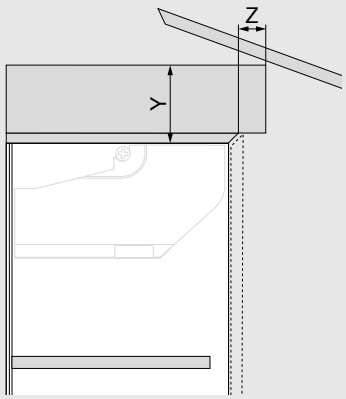

Gap = 2 mm

Mitred application			
FD (mm)	19	22	24
Z max. (mm)	25	23	20
Y max. (mm)	82	78	76
Rebated application			
FT (mm)	10	13	16
FD (mm)	19–25	19–25	19–25
Z max. (mm)	28	29	28
Y max. (mm)	85	83	82

FD Front thickness

FT Rebate depth

Cross stabiliser

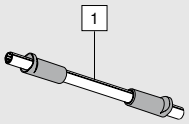

1 LW - 129 mm

LW Internal cabinet width

Connecting piece

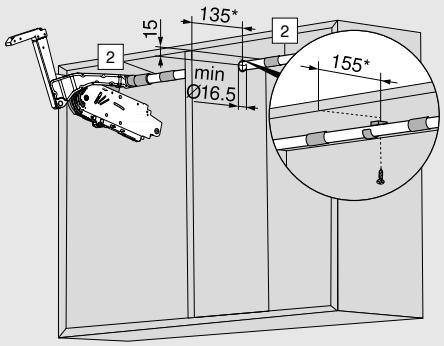

2 Half internal cabinet width LW - 147 mm

LW Internal cabinet width

FT Rebate depth

* For rebated application + rebate depth FT

AVENTOS HL

AVENTOS HL

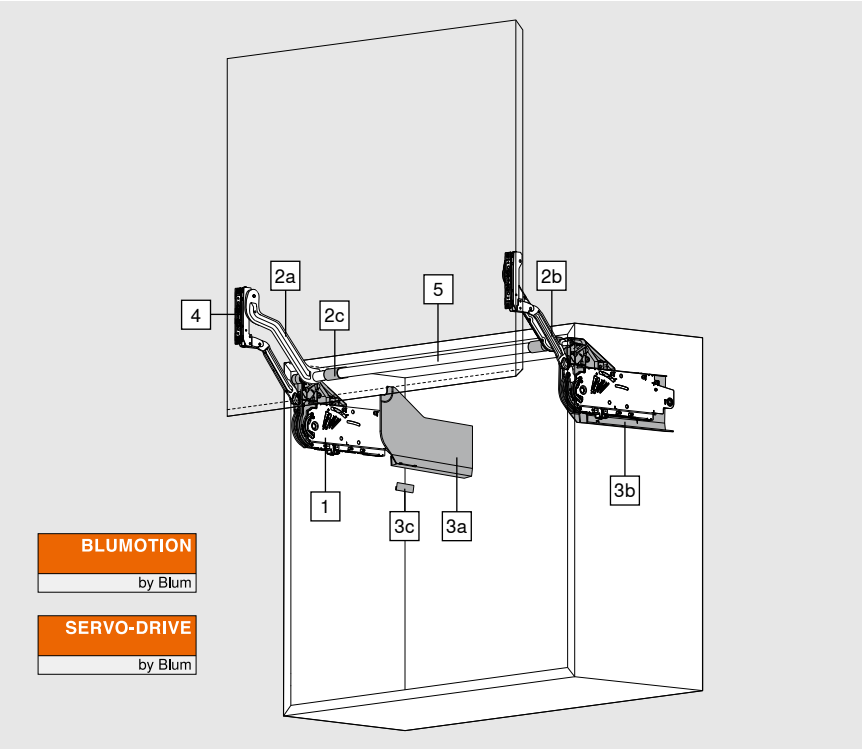

The AVENTOS HL lift up is the ideal solution for small, one-part fronts. Fronts lift up parallel to the cabinet so the lift up system is perfect for special installation situations, e.g. for concealing electrical appliances behind wall cabinet fronts.

Ordering information

1	Lift mechanism set				
	Cabinet height KH (mm)				
	300–349	350–399	400–550	450–580	
	Lever arm set				
	20L3200.06	20L3500.06	20L3800.06	20L3900.06	
Weight of front incl. handle (kg)	1.25–4.25	1.25–2.50			20L2100.05
	3.50–7.25	1.75–5.00	1.75–3.50		20L2300.05
	6.50–12.00	4.25–9.00	2.75–6.75	2.00–5.25	20L2500.05
	11.00–20.00	8.00–14.75	5.75–11.75	4.25–9.25	20L2700.05
		13.50–20.00	10.50–20.00	8.25–16.50	20L2900.05

Consisting of:		
1	2 x	Symmetrical lift mechanism
-	10 x	Chipboard screws Ø 4 x 35 mm

Ordering information

2		Lever arm set	
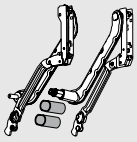		**Cabinet height KH (mm)**	
		300–349	20L3200.06
		350–399	20L3500.06
		400–550	20L3800.06
		450–580	20L3900.06
Consisting of:			
2a	1 x	Lever arm left	
2b	1 x	Lever arm right	
2c	2 x	Oval cross stabiliser cover cap	

3 ☐		Cover cap set		
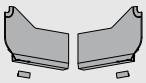		**Colour**	**Material**	
		HGR, SW, TGR	Nylon	20L8020
Consisting of:				
3a	1 x	Large cover cap left		
3b	1 x	Large cover cap right		
3c	2 x	Branding element, stamped with Blum logo		
		IN-G		

4	Front fixing bracket set	
	Version	
	Wooden fronts [1]	20S4200

[1] Use 4 chipboard screws (609.1x00) per side for wooden fronts.

5	Oval cross stabiliser rod		
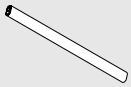	**Version**	**Length (mm)**	
	Oval	1061	20Q1061UA
For cutting to size			
Cutting	Internal cabinet width LW - 129 mm		

-		Connecting piece set for cross stabiliser		
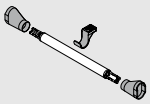		**From internal cabinet width LW 1190 mm**		
		Diameter (mm)	**Material**	
		Ø 16	Aluminium	20Q153ZA
Consisting of:				
-	1 x	Connecting piece		
-	1 x	Fixing		
-	2 x	Cross stabiliser cover cap		
Cutting for 5		Internal cabinet width LW / 2 - 147 mm		

Colour	
HGR	Light grey
SW	Silk white
TGR	Dark grey
IN-G	In-mould brushed stainless steel

Information

SERVO-DRIVE planning	20

For SERVO-DRIVE ordering information see AVENTOS general brochure

www.blum.com/aventosbrochure

AVENTOS HL

Planning

Mitred application

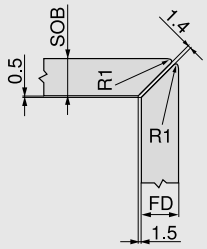

SOB Top panel thickness

FD Front thickness

R Radius

Rebated application

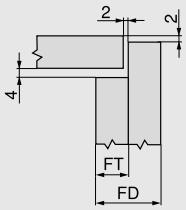

FD Front thickness

FT Rebate depth

Drilling position

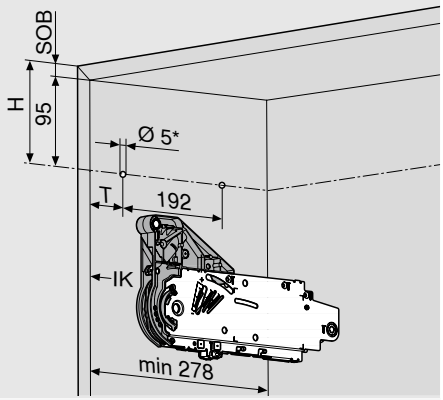

5 x chipboard screws Ø 4 x 35 mm

T **Mitre:** 37 mm from cabinet inner edge IK
Rebate: 37 mm + rebate depth FT from IK

IK Cabinet inner edge

SOB Top panel thickness

* Drilling depth 5 mm

Space requirement

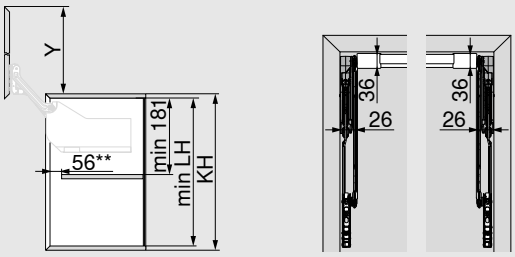

Lever arm set	min. LH* (mm)	Y* (mm)
20L3200.06	262	264
20L3500.06	312	352
20L3800.06	362	440
20L3900.06	412	529

LH Internal cabinet height

KH Cabinet height

FT Rebate depth

* Dimensions based on lower gap = 0 mm

**For rebated application + rebate depth FT

AVENTOS HL

Planning

Front assembly

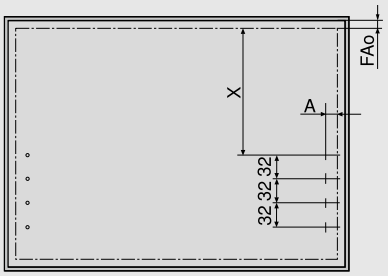

Lever arm set	X (mm) Mitre	X (mm) Rebate
20L3200.06	159.5	156
20L3500.06	209.5	206
20L3800.06	259.5	256
20L3900.06	309.5	306

FAo Upper front overlay

A Distance from front inner edge
Mitre: 12 mm
Rebate: 8.5 mm

X Distance from front inner edge

Application adjacent to wall: Requires 5 mm minimum gap

Use 4 chipboard screws (609.1x00) per side for wooden fronts.

Front setting

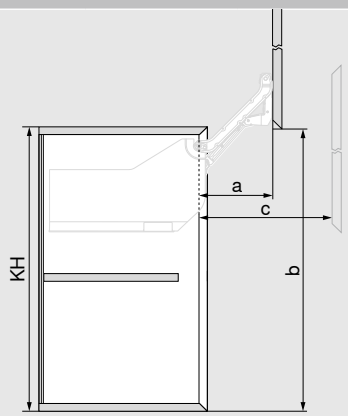

Lever arm set	a** (mm)	b* (mm)	max. c** (mm)
20L3200.06	114	256	159
20L3500.06	146	344	209
20L3800.06	178	432	259
20L3900.06	210	521	309.5

* Dimensions based on lower gap = 2 mm

** For rebated application - rebate depth FT

Space requirement Cornice/Crown moulding

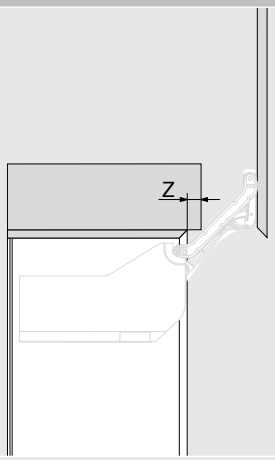

Gap = 2 mm

Mitred application			
FD (mm)	19	22	24
Z (mm)	18	18	18
Rebated application			
FT (mm)	10	13	16
FD (mm)	19–25	19–25	19–25
Z (mm)	29	26	23

FD Front thickness

FT Rebate depth

Cross stabiliser

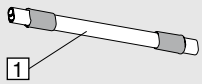

1 LW -129 mm

LW Internal cabinet width

Connecting piece

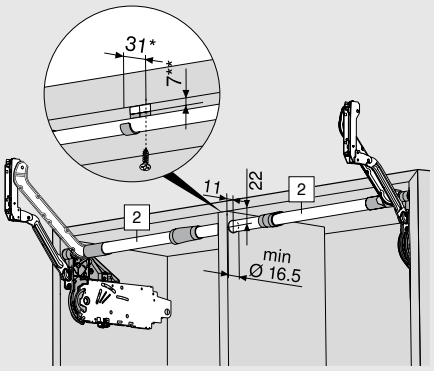

2 Half internal cabinet width LW - 147 mm

LW Internal cabinet width

FT Rebate depth

* For rebated application + rebate depth FT based on cabinet inner edge

** Lower with 7 mm packing piece

AVENTOS HK top

AVENTOS HK top

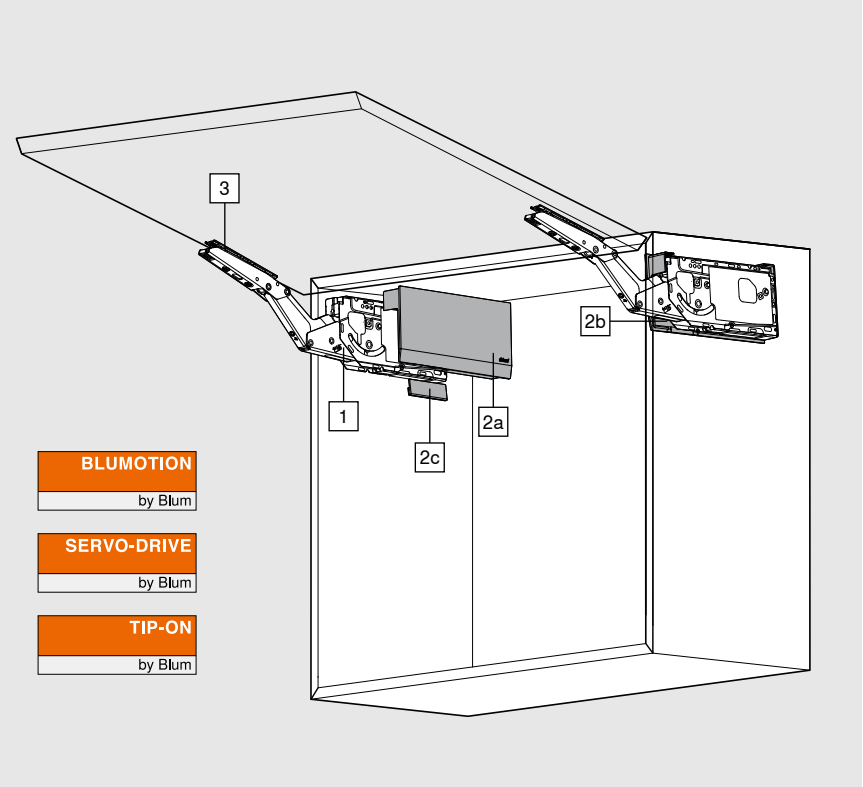

Fronts equipped with AVENTOS HK top need little space above the cabinet. That is why the stay lift is the ideal lift system for applications in wall cabinets, tall cabinets or above the refrigerator.

Power factor (LF) = cabinet height (KH) [mm] x front weight incl. double handle weight [kg]

Ordering information

1	Lift mechanism set		
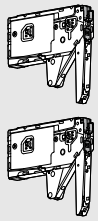	Fixing with pre-mounted system screws		
	LF	**OW**	
	420–1610	75°– 107°	**22K2310**
	930–2800	75°– 107°	**22K2510**
	1730–5200	75°– 107°	**22K2710**
	3200–9000	75°– 107°	**22K2910**
Consisting of:			
1 2 x	Symmetrical lift mechanism with pre-mounted system screws		
LF Power factor			
OW Opening angle (infinitely variable adjustment)			
Note			
Max. front weight 18 kg if using two lift mechanisms.			
The power factor (LF) can be increased by 50% if you use a third lift mechanism. We recommend a third lift mechanism for wide cabinets. This will prevent the front from sagging when open.			

AVENTOS HK top

Ordering information

2		Cover cap set		
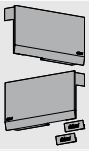		Colour	Material	
		HGR, SW, TGR	Nylon	22K8000
Consisting of:				
2a	1 x	Cover cap left		
2b	1 x	Cover cap right		
2c	2 x	Branding element, stamped with Blum logo		
		IN-G		

3	Front fixing bracket set	
	Version	
	Wooden fronts [1]	20S4200

[1] Use 4 chipboard screws (609.1x00) per side for wooden fronts.

Colour	
HGR	Light grey
SW	Silk white
TGR	Dark grey
IN-G	In-mould brushed stainless steel

Information

SERVO-DRIVE planning 20

For SERVO-DRIVE ordering information see AVENTOS general brochure

www.blum.com/aventosbrochure

TIP-ON planning 22

For TIP-ON ordering information see AVENTOS general brochure

www.blum.com/aventosbrochure

AVENTOS HK top

Planning

Mitred application

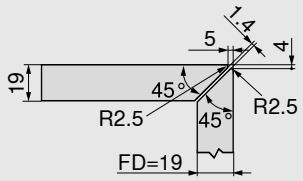

FD Front thickness

R Radius

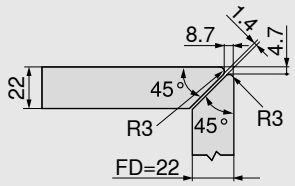

FD Front thickness

R Radius

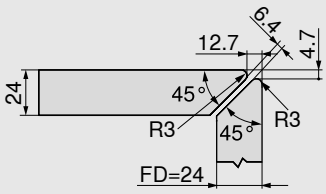

FD Front thickness

R Radius

Rebated application

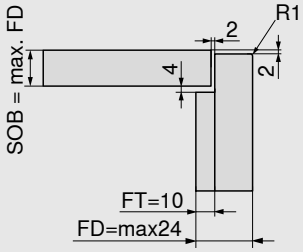

FD Front thickness

FT Rebate depth

R Radius

SOB Top panel thickness

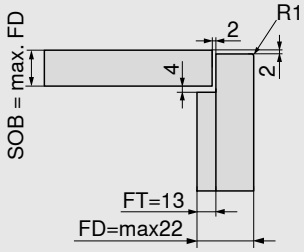

FD Front thickness

FT Rebate depth

R Radius

SOB Top panel thickness

Drilling position

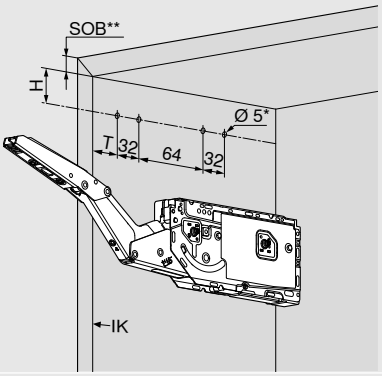

T **Mitre:** 37 mm from cabinet inner edge IK
Rebate: 36.5 mm + rebate depth FT from cabinet front edge KV

H **Mitre:** 35 mm
Rebate: 36 mm

IK Cabinet inner edge

KV Cabinet front edge

FT Rebate depth

SOB Top panel thickness

* Drilling depth 5 mm

** **Mitre:** max. 25 mm
Rebate: max. 22 mm

Space requirement

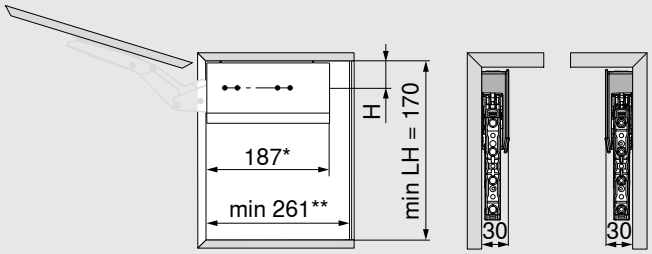

LH Internal cabinet height

* For rebated application + rebate depth FT

** Min. 261 mm with visible wall hanging bracket
For rebated application + rebate depth FT

AVENTOS HK top

Planning

Front assembly

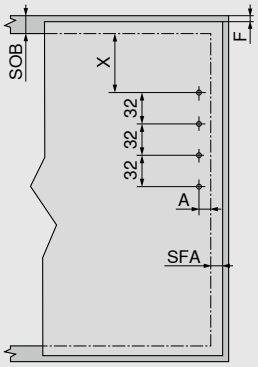

4 x chipboard screws Ø 3.5 x 15 mm

A Distance from front inner edge
Mitre: 12 mm
Rebate: 8.5 mm

X Distance from front inner edge
Mitre: 62 mm
Rebate: 58 mm

F Gap

SFA Side front overlay

SOB Top panel thickness

Application adjacent to wall: Requires 5 mm minimum gap

Use 4 chipboard screws (609.1x00) per side for wooden fronts.

Minimum gap for rebated applications

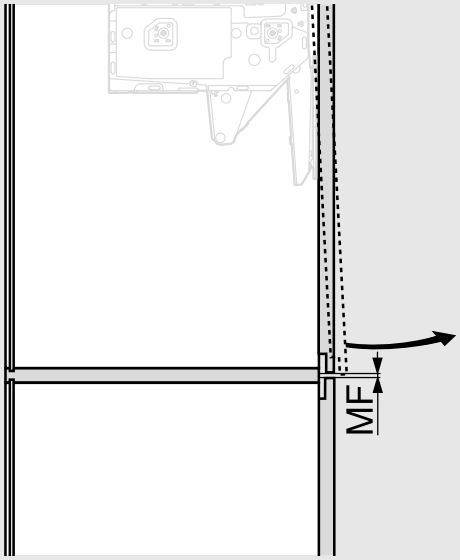

MF Minimum gap for opening (2 mm)

Cornice/crown moulding space requirement for max. opening angle:

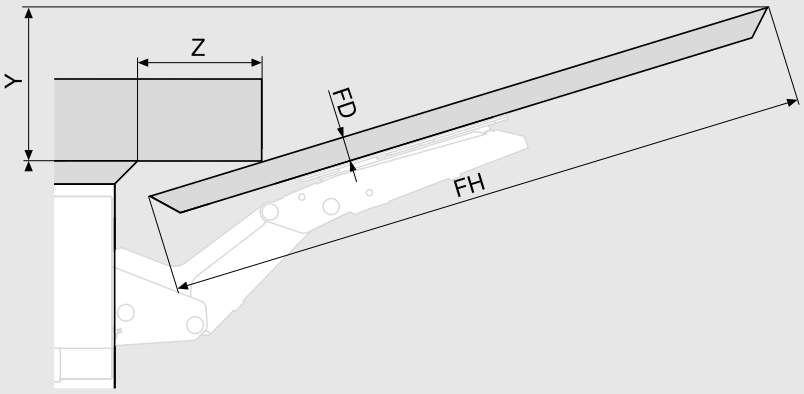

Y = FH x 0.29 - 15 + FD

Mitred application						
FD (mm)	19	22	24			
Z (mm) for 107°	20	–	–			
Rebated application						
FT (mm)		10			13	
FD (mm)	19	22	24	19	22	–
Z (mm) for 107°	49	39	28	46	36	–

FD Front thickness

FH Front height

FT Rebate depth

A single touch suffices (hand or elbow) and lift systems equipped with SERVO-DRIVE for AVENTOS open as if by magic. To close the lift system, just press the easy-to-reach switch on the inside of the cabinet. For mitred and rebated applications for AVENTOS HF, AVENTOS HS, AVENTOS HL and AVENTOS HK top.

Mitred applications with SERVO-DRIVE for AVENTOS are not standard applications and that is why you need:

- SERVO-DRIVE items
  (for ordering information see the Blum catalogue)
- Double side panels set back by 1 mm so that the SERVO-DRIVE switches can be installed

Rebated applications with SERVO-DRIVE for AVENTOS are not standard applications and that is why you need:

- SERVO-DRIVE items
  (for ordering information see the Blum catalogue)
- Double side panels set back by the rebate depth plus 1 mm so that the SERVO-DRIVE switches can be installed

SERVO-DRIVE for AVENTOS – mitred and rebated applications

Space requirement

Mitre

AVENTOS HF/HS/HL

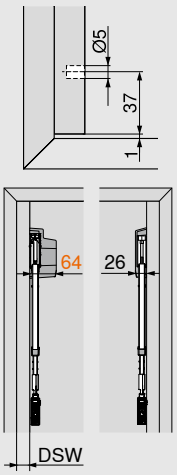

AVENTOS HK top

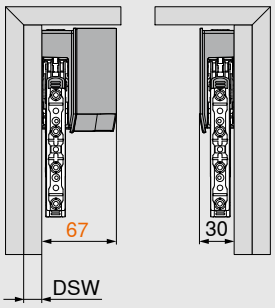

Rebate

AVENTOS HF/HS/HL

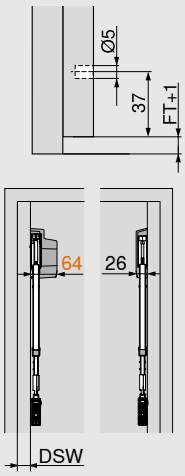

AVENTOS HK top

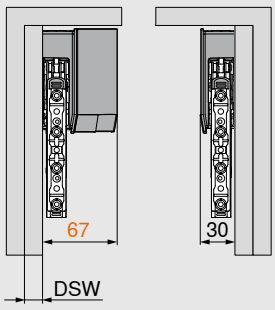

FT Rebate depth

DSW Double side panel

Front assembly

Mitre and rebate

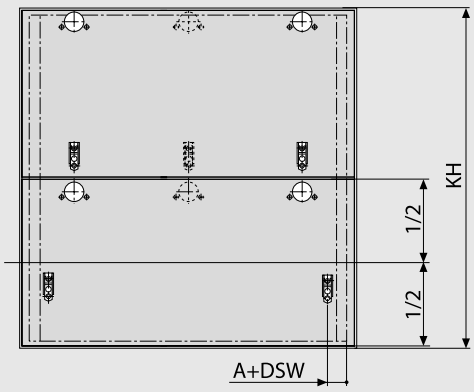

A Distance from front inner edge

DSW Double side panel

KH Cabinet height

A	AVENTOS HF	AVENTOS HS/HL/HK top
Mitre	12 mm	12 mm
Rebate	11 mm	8.5 mm

SERVO-DRIVE for AVENTOS – mitred and rebated applications

Position of Blum distance bumper

AVENTOS HF/HS/HL

Mitre and rebate

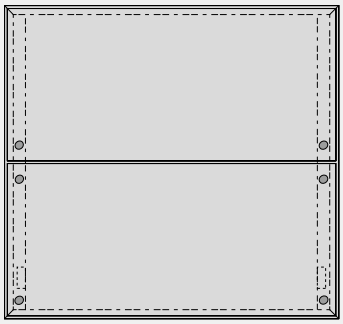

Mitre

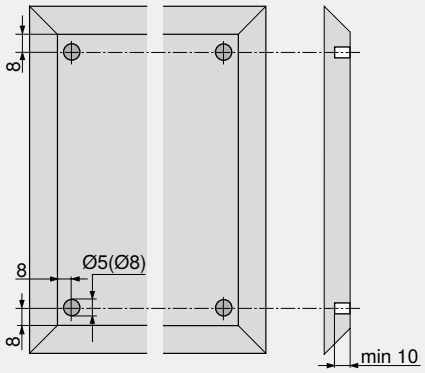

Rebate

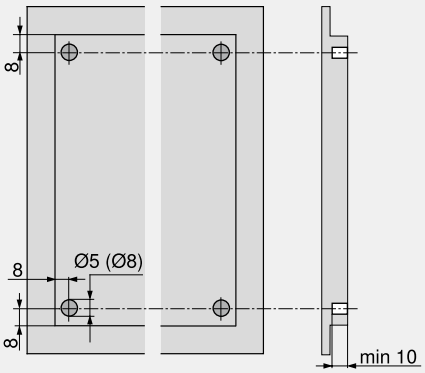

AVENTOS HK top

Mitre

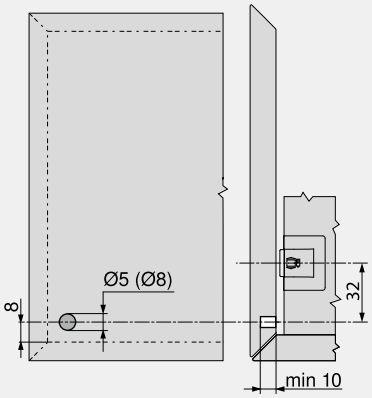

Rebate

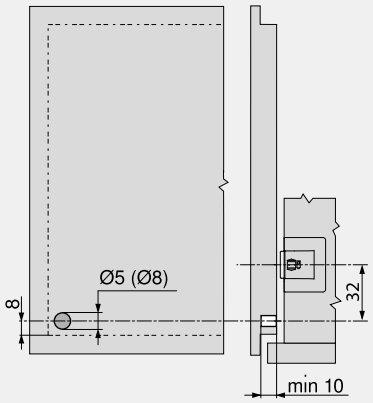

Insert Blum distance bumper (do not glue)

SERVO-DRIVE switch

Mitre

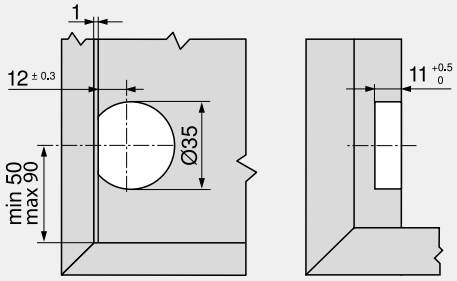

Rebate

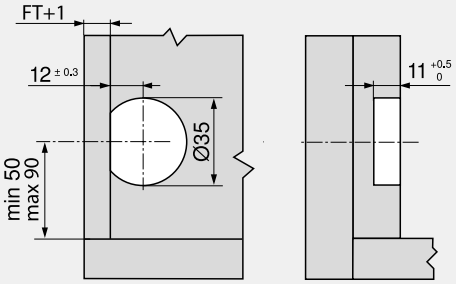

FT Rebate depth

The TIP-ON for AVENTOS HK top mechanical opening support system makes it easy to open handle-less fronts.
To close, simply press shut.

Mitred applications with TIP-ON for AVENTOS HK top are not standard applications and that is why you need:

- TIP-ON items (for ordering information see the Blum catalogue)
- A double base set back by 1.5 mm for TIP-ON for drilling

TIP-ON for AVENTOS HK top – mitred applications

For drilling

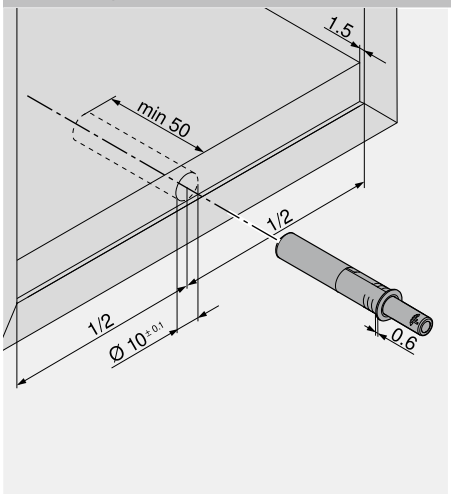

Front gap

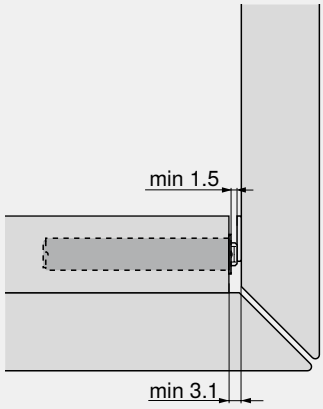

Catch plate

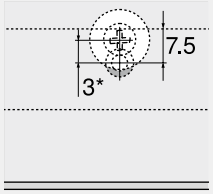

* 3 mm offset installation

Straight adapter plate

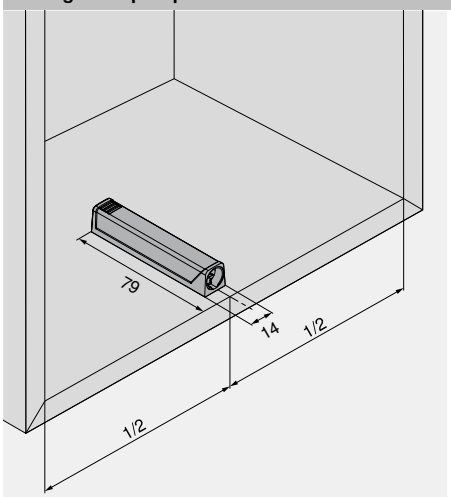

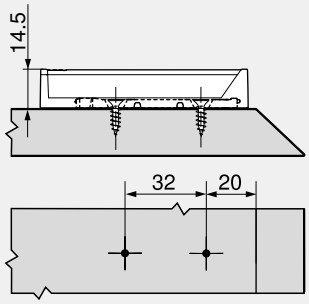

Catch plate

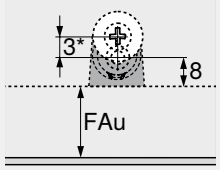

* 3 mm offset installation

FAu Bottom front overlay

Rebated applications with TIP-ON for AVENTOS HK top are not standard applications and that is why you need:

- TIP-ON items (for ordering information see the Blum catalogue)
- A double base set back by rebate depth plus 1 mm for TIP-ON for drilling

TIP-ON for AVENTOS HK top – rebated applications

For drilling

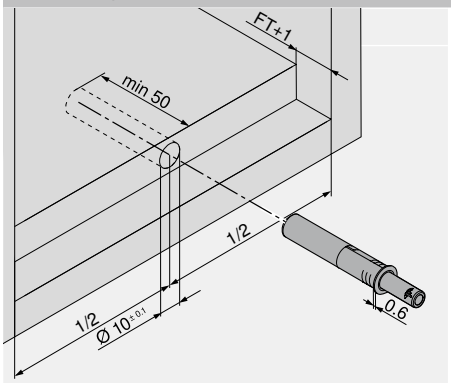

FT Rebate depth

Front gap

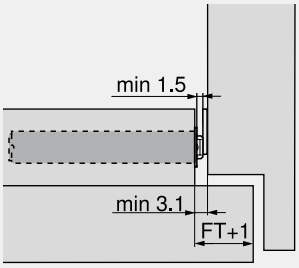

FT Rebate depth

Catch plate

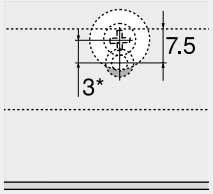

* 3 mm offset installation

Straight adapter plate

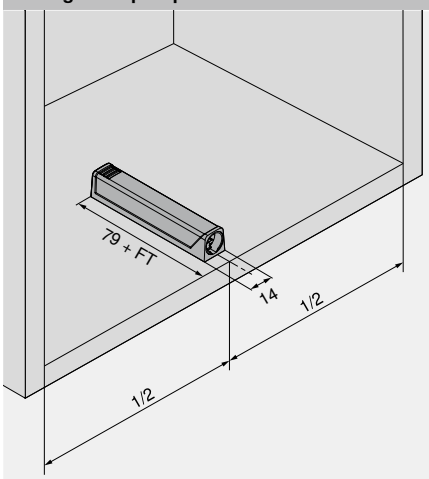

FT Rebate depth

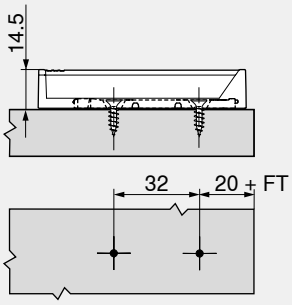

FT Rebate depth

Catch plate

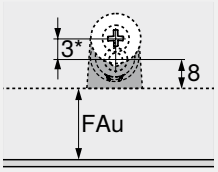

* 3 mm offset installation

FAu Bottom front overlay

Notes

Notes

The company Blum

Founded over 60 years ago by Julius Blum, Blum is a family-owned company that operates on an international scale. Its strategic business segments include lift, hinge and pull-out systems. All our product developments focus on perfecting motion.

www.blum.com

Blum in Austria and around the world

The company has eight plants in Vorarlberg, Austria, additional production sites in Poland, the USA and Brazil and 32 subsidiaries/representative offices. Blum supplies more than 120 markets. The Blum Group employs 8,300 people in total, 6,200 of whom work in Vorarlberg.

Global customer benefits

"Whether manufacturer, distributor, fitter or kitchen user – everybody should personally enjoy the benefits of Blum products" – that is Blum's philosophy on global customer benefits.

Innovations

To support customers with innovative fittings solutions and secure long-term success for the company, we need to consistently invest in research and development, in plants and facilities and in employee training. With more than 2,100 granted patents worldwide, Blum is one of Austria's most innovative companies.

Quality

Blum's comprehensive concept of quality does not only apply to products. Services and collaboration with customers and partners should also meet the same quality requirements.

Environment

At Blum, we believe that responsible ecological behaviour has long-term economic benefits. The longevity of products is just one of many important aspects. Other important measures include the use of environmentally-friendly processes, the intelligent use of materials and prudent energy management.

DYNAMIC SPACE

Good workflows, optimum use of storage space and top quality motion are important features of a practical kitchen. Blum's ideas for practical kitchens are designed to bring function, convenience and ergonomics to furniture interiors.

The data given above is based on our current state of knowledge as at 30 June 2020

Look for our FSC™-certified products

FSC
www.fsc.org
FSC™ C115115

All content is copyrighted by Blum.
Subject to technical modifications and changes to the range without notice.
IDNR: 000.000.0 · EP-498/2 EN-MY/06.21

Blum Malaysia
A-2-3 & A-2-3A
Aurora Place Mall @ Bukit Jalil
Jalan Persiaran Jalil 1
Bandar Bukit Jalil
57000 KUALA LUMPUR
MALAYSIA
E-Mail: info.my@blum.com
www.blum.com

Julius Blum GmbH
Furniture Fittings Mfg.
6973 Höchst, Austria
Tel.: +43 5578 705-0
Fax: +43 5578 705-44
E-mail: info@blum.com
www.blum.com

Our sites in Austria, Poland and China are certified to the international standards mentioned below.
Our site in the USA is certified to ISO 9001.
Our site in Brazil is certified to ISO 9001 and ISO 14001.

ISO 9001 Certified Quality System
ISO 14001 Certified Environmental System
ISO 50001 Certified Energy System

blum®