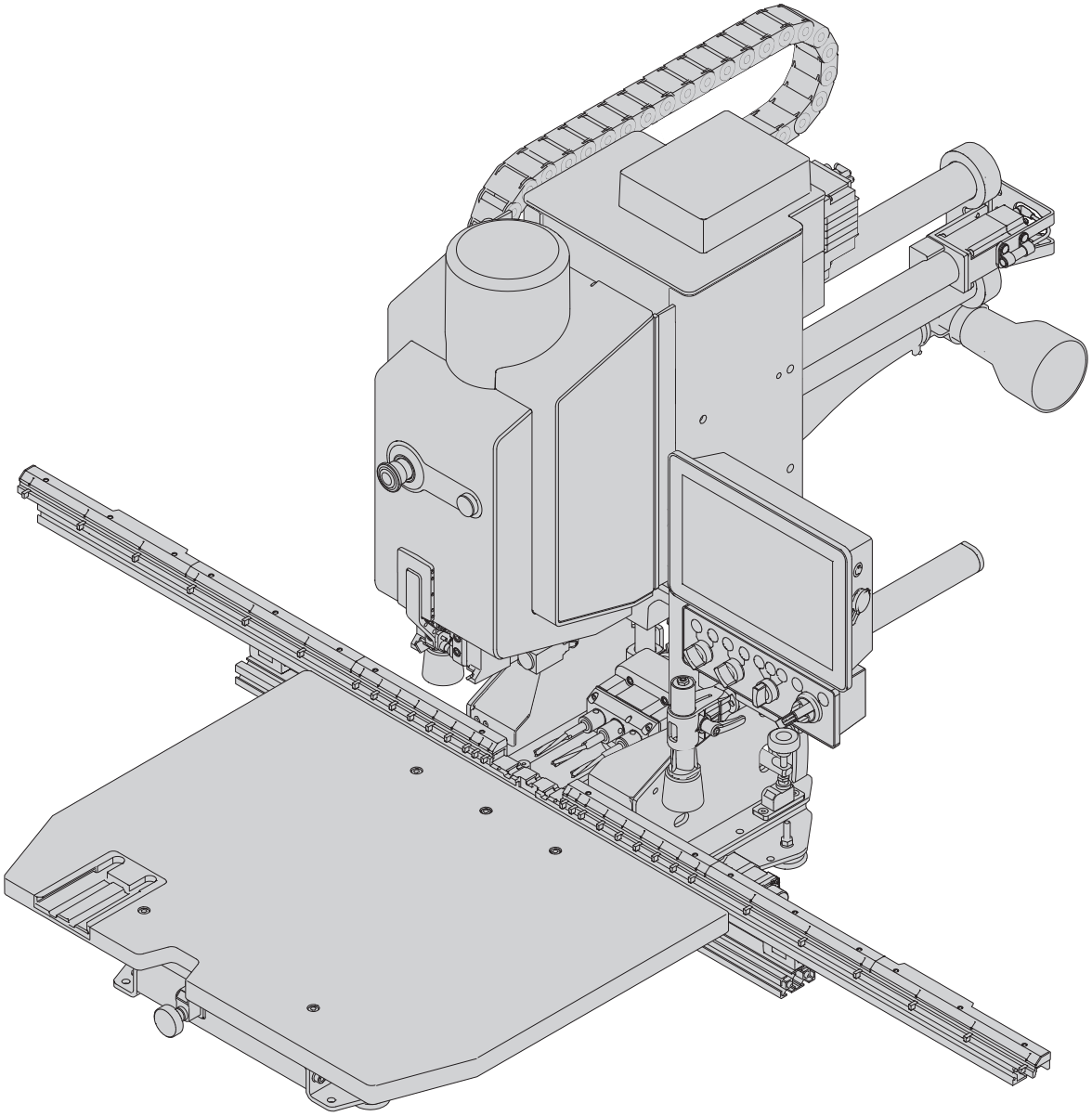

Ensure that the instructions have been fully read and understood before operating the assembly machine. Only properly trained and authorised personnel may operate the assembly machine. The instruction leaflet must be accessible at all times.

MINIPRESS top

Safety instructions, set-up instructions and instruction leaflet

www.blum.com

Contents

4 Safety
- **4** Intended use
- **5** Risk levels
- **5** Safety information
- **5** Warning signs

10 Reference diagrams

14 Explanation of operating and control elements

21 Start-up

26 Setup

35 Drilling and insertion

42 Horizontal drilling*

45 Maintenance

48 Troubleshooting

53 Additional information
- **53** CE declaration
- **54** Technical data

* The horizontal drilling function is not available with type M70E2000.

Handling

➢ Please read the instruction leaflet and the safety information before start-up of the assembly machine.
➢ We recommend that you use the reference diagrams to make it easier to identify the parts being described.

Safety principle

The assembly machine complies with current safety standards. Nevertheless, there will still be certain residual risks if the information contained in this instruction leaflet is not observed.

Residual risk according to EN ISO 12100:2010

- The assembly machine is equipped with all the necessary protection features.
- However, there will still be some residual risks for the user, particularly when removing the protective equipment or when control units fail.
- Other residual risks are identified by warning signs and safety information.

Intended use

The designated purpose of the assembly machine is the drilling and insertion of furniture fittings into work pieces made of wood, particle board or epoxy coated wood.

- The assembly machine may only be operated by fully-trained personnel.
- The assembly machine may only be used in skilled trade and industrial applications.
- It should only be installed in dry, enclosed rooms.
- The assembly machine is only intended for stationary operation.
- Only original Blum tools may be used.
- No liability can be accepted for any other use.
- Work piece size: vertical board thickness 45 mm
  horizontal board thickness 40 mm
- The MZK.224S (11 spindles) drilling head may only be used with the supplied table extension.
- The MINIPRESS top is used with the EASYSTICK computer MZD.5700.01 and EASYSTICK ruler MZD.2700

Foreseeable misuse

- No metal or aluminium frames may be drilled.
- The MZK.2880 (17 spindles) drilling head may not be used.
- Only use drilling heads with a safety shield.

Areas of responsibly

The operator

- must ensure that only fully-trained personnel, who have read and understood the instruction leaflet, especially the chapter on safety, operate and service the assembly machine.
- is responsible for the safety-related condition of the assembly machine.
- will take the assembly machine out of service immediately when faults are discovered that affect safety.

Risk levels

WARNING

- WARNING indicates a danger that could lead to serious injury if not avoided.

CAUTION

- CAUTION indicates a danger that could lead to injury if not avoided.

NOTE

- This NOTE symbol indicates information that should be observed.

Safety information

WARNING

Serious cuts.
Failure to heed this warning may result in personal injury.

➢ Always disconnect the assembly machine from the power supply and the pressurised air network before all cleaning and maintenance work.

Operation

- The assembly machine is designed to only be operated by one person.
- The assembly machine is only intended for stationary operation.

Installation

- Ensure there is sufficient lighting.
- Only attach the assembly machine to a sufficiently stable table. Load bearing capacity: minimum 250 kg. Height 850 mm (+/- 50 mm).
- The assembly machine may not be operated without the work table.
- The assembly machine is not explosion-proof. It should not be set up near painting facilities.
- The assembly machine is not suitable for operation in an open environment.

Protection equipment

- Do not make any changes or alterations to the assembly machine.
- Protection equipment may not be removed.
- Before starting work, before any shift change or change of personnel, you should check that the protection equipment and machine parts are functioning properly. Any damaged parts should be replaced by original parts from Blum.
- Only use drilling heads with leading protection.

Tools

- Only use sharp, clean drill bits. Attach drill bits securely.
- Always check that the drill bit is secure before start-up.
- When changing the drill bit, always unclamp the drilling head. Set main switch [63] to "OFF" pos.
- For your own safety, only use those accessories which are recommended or indicated in the instruction leaflet or Blum catalogue.
- Only Blum drilling heads may be used.

Work piece

- The machine may only be used with the height-adjustable horizontal holder (M75.220M00.0X).
- Particular care must be taken when working on sections that jut out over the work table. Use additional supports.
- Secure the work piece during drilling/insertion. Use the assembly machine clamps or if these are not sufficient for the particular job, use suitable clamping equipment.
- Make sure that no other tools or objects are on the work table aside from your work piece before turning on the assembly machine.

Operation

- When you release the start button [18], the drill bit will continue to run, you must wait until it comes to a stop.
- Only operate the assembly machine with the extraction system switched on.
- The negative pressure in the extraction system must be 250–300 mbar.
- Ensure that the average air velocity for the extraction system is at least 20 m/sec.
- Always set the main switch to the "OFF" POS. after finishing work.

Repair and maintenance

- If there are any questions, please contact the BLUM Customer Service Department.
- Only an electrician may make the connection to the electrical grid.
- Every time before starting work, check the electrical cable and the pneumatic hoses for damage.
- Repairs may only be performed by authorised personnel.

Personal protective equipment

- All national regulations regarding labour law, industrial safety as well as all disposal guidelines must be followed.
- Wear eye protection.
- Wear ear protection.
- Wear appropriate work clothing.

Warning signs

Before connecting the assembly machine to the power supply, you must ensure that you have understood ALL the safety instructions, warning signs and the instruction leaflet.

Keep unauthorised persons away from the assembly machine. Only **1** person at a time should operate the assembly machine.

Always wear eye protection when operating this machine.

Wear proper ear protection when operating this machine.

Caution crush danger!

Do not work with gloves.

The assembly machine is not suitable for operation in an open environment.

Do not lift here.

Hot surface - risk of burns.

Do not touch the drill bit.

Caution, voltage - danger of shock.

Position of warning signs and danger zones

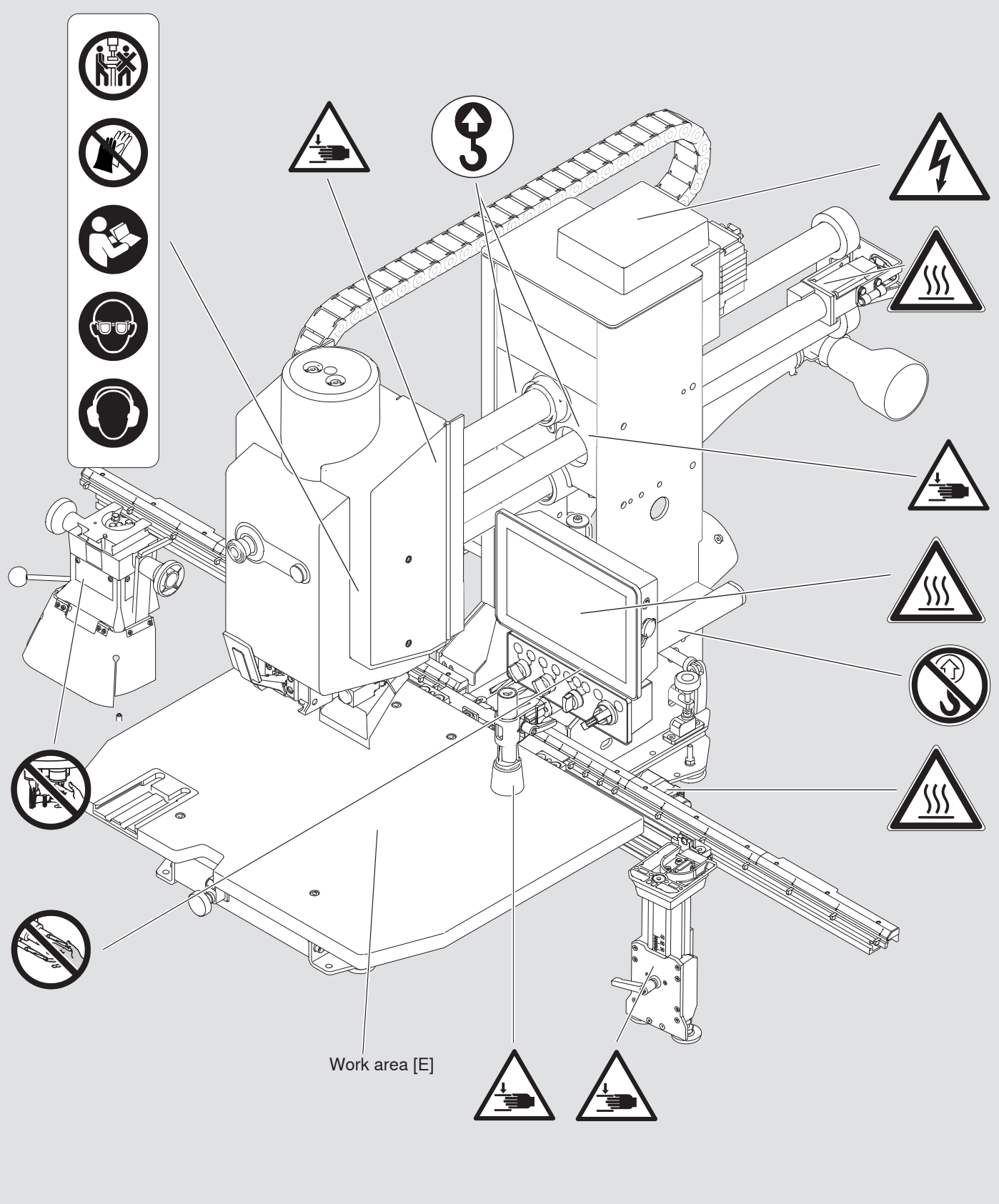

Position rating plates

Rating plate: MINIPRESS top [A]

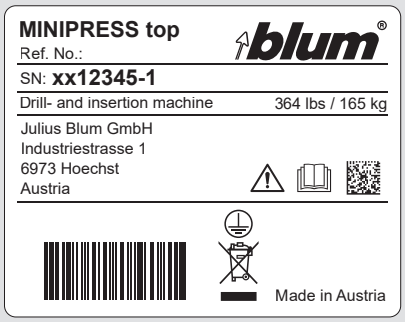

Illustration

Rating plate: EASYSTICK computer [B]

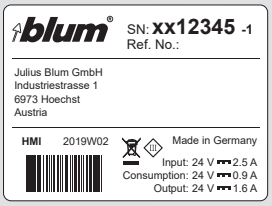

Illustration

Rating plate: EASYSTICK ruler [C]

Illustration

Device type: drilling and insertion machine

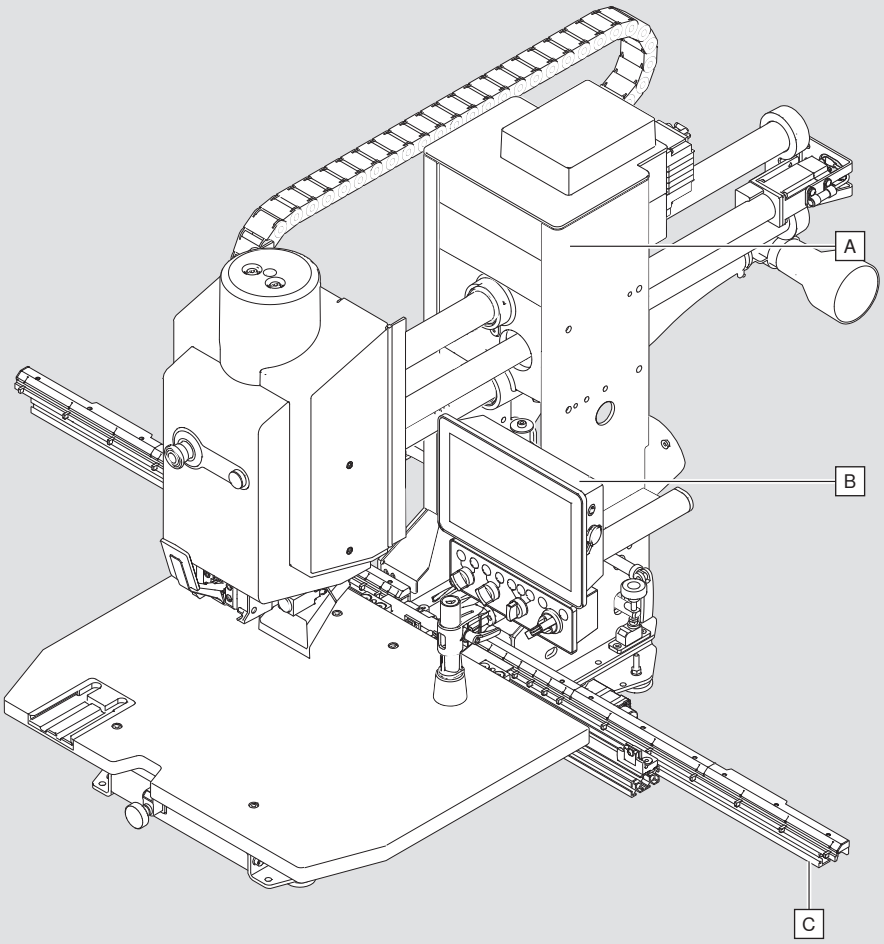

Reference diagrams

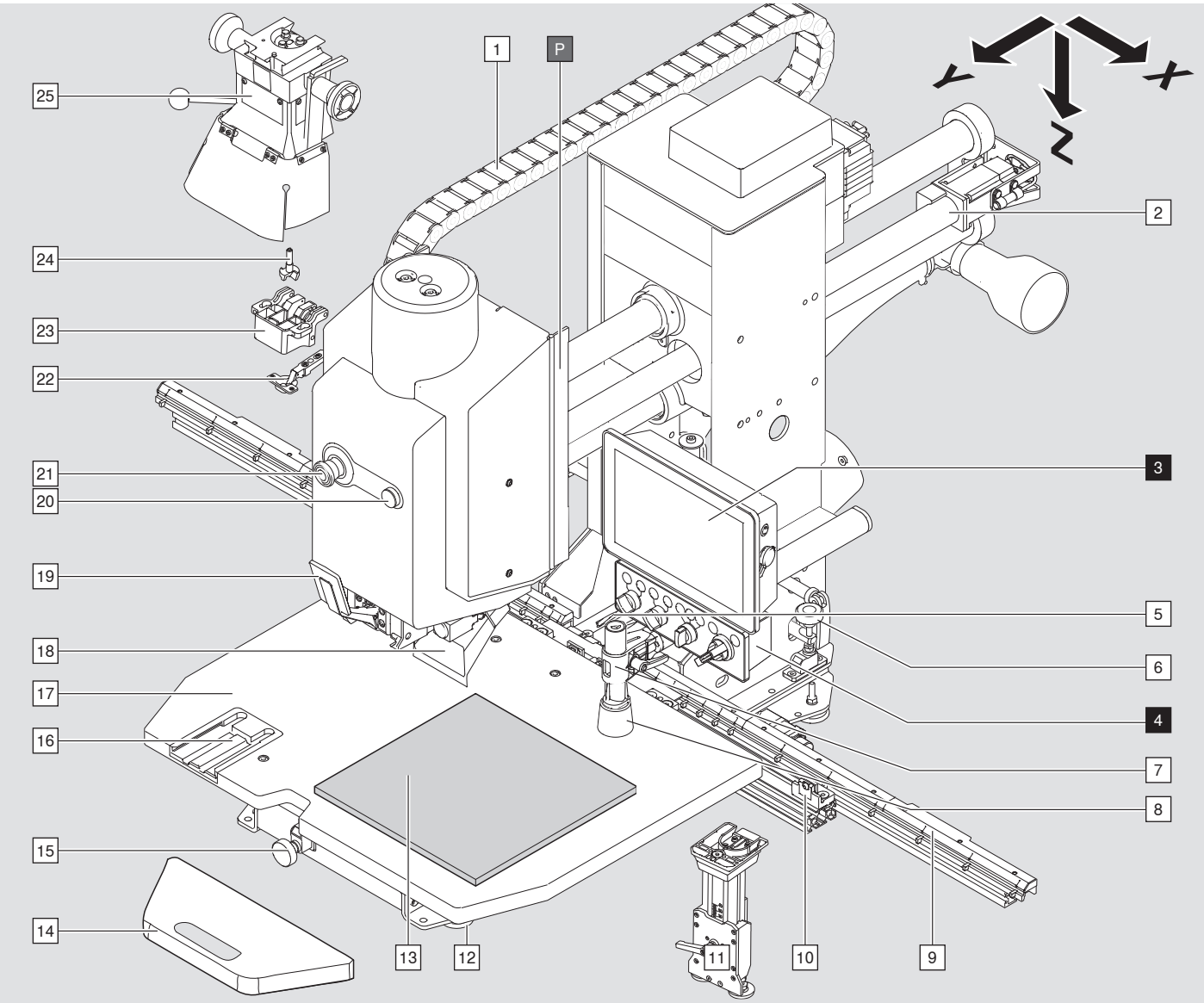

1 Cable chain
2 Stepper motor
3 EASYSTICK computer
4 Operator panel
5 Horizontal drilling head
6 Height adjustment knob for horizontal drilling
7 Hold down clamp
8 Hold down clamp/sight glass
9 EASYSTICK ruler
10 Ruler support
11 Horizontal hold down clamp
12 Mounting foot
13 Work piece
14 Additional table
15 Depth adjustment knob for horizontal drilling
16 Drilling head holder
17 Work table
18 Vertical extraction system
19 Drilling head locking lever
20 Start button
21 Emergency stop
22 Fitting
23 Insertion ram
24 Drill bits
25 Drilling head
P Machine centre of gravity

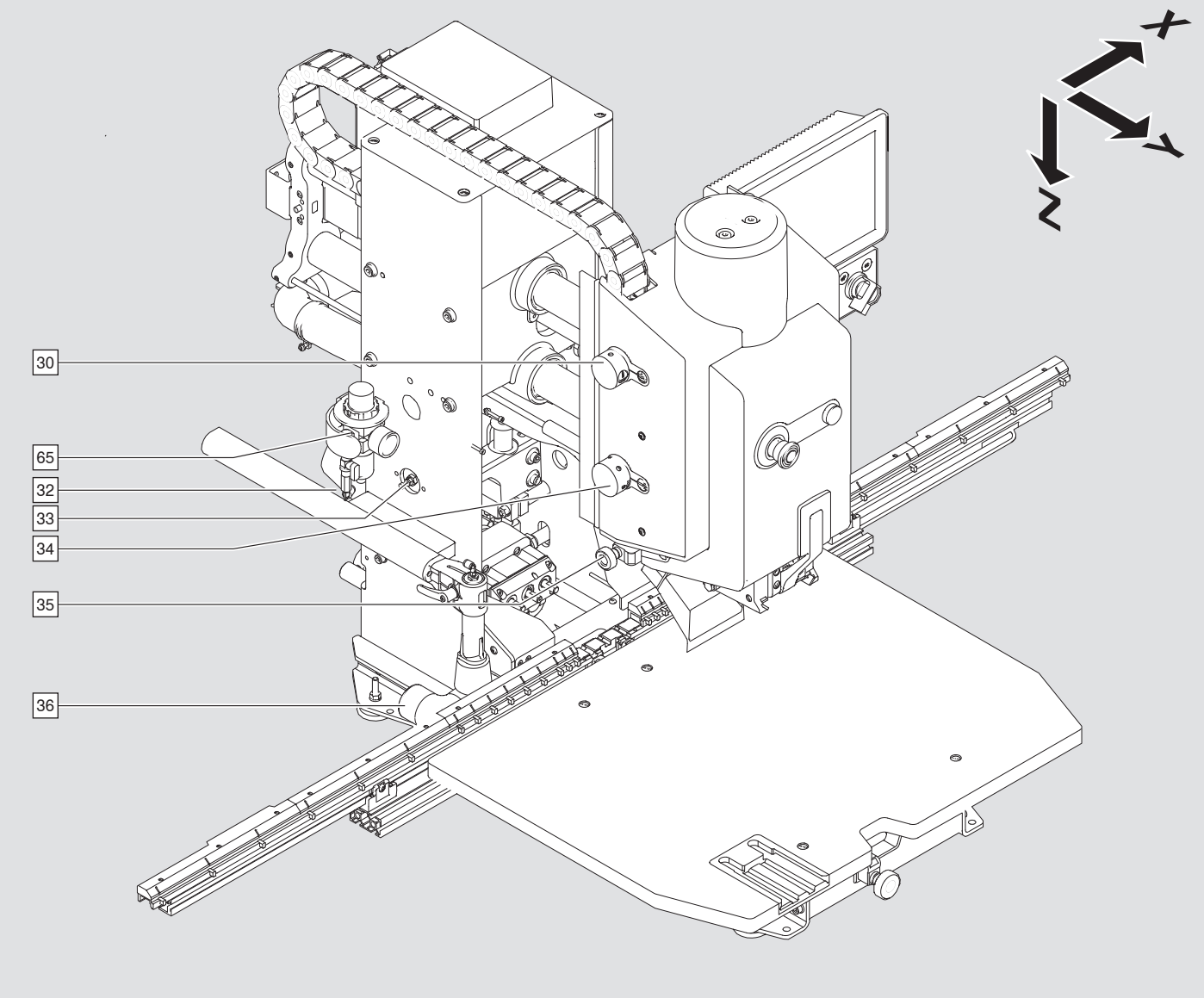

30 Return stroke limitation
32 Compressed air shut-off valve
33 Speed controller for creep speed
34 Material thickness adjustment knob
35 Residue material thickness adjustment knob
36 Extraction socket
65 Air pressure regulator

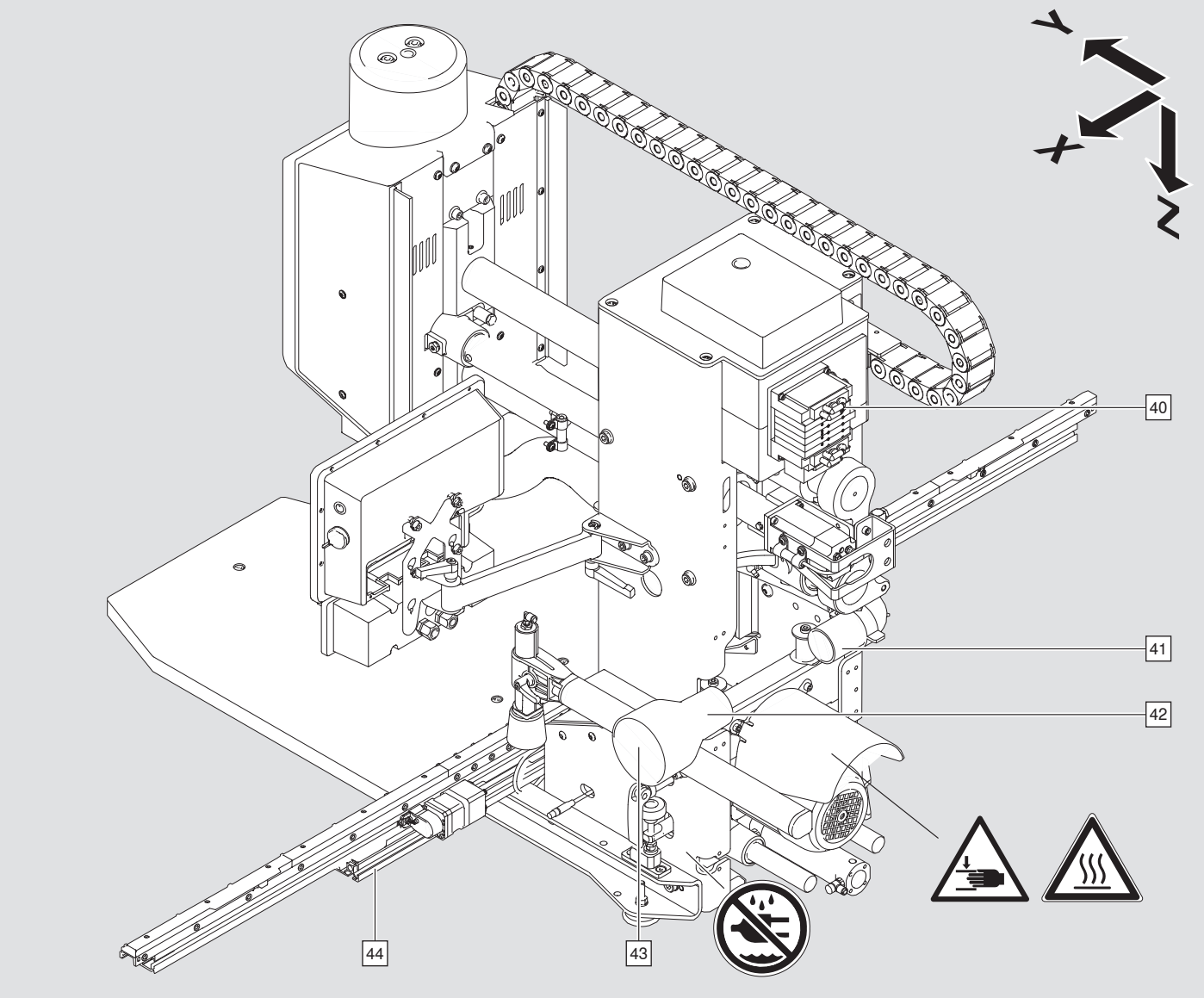

40 Valve block
41 Vertical extraction system
42 Y hose extraction system
43 Funnel extraction system
44 Ruler attachment

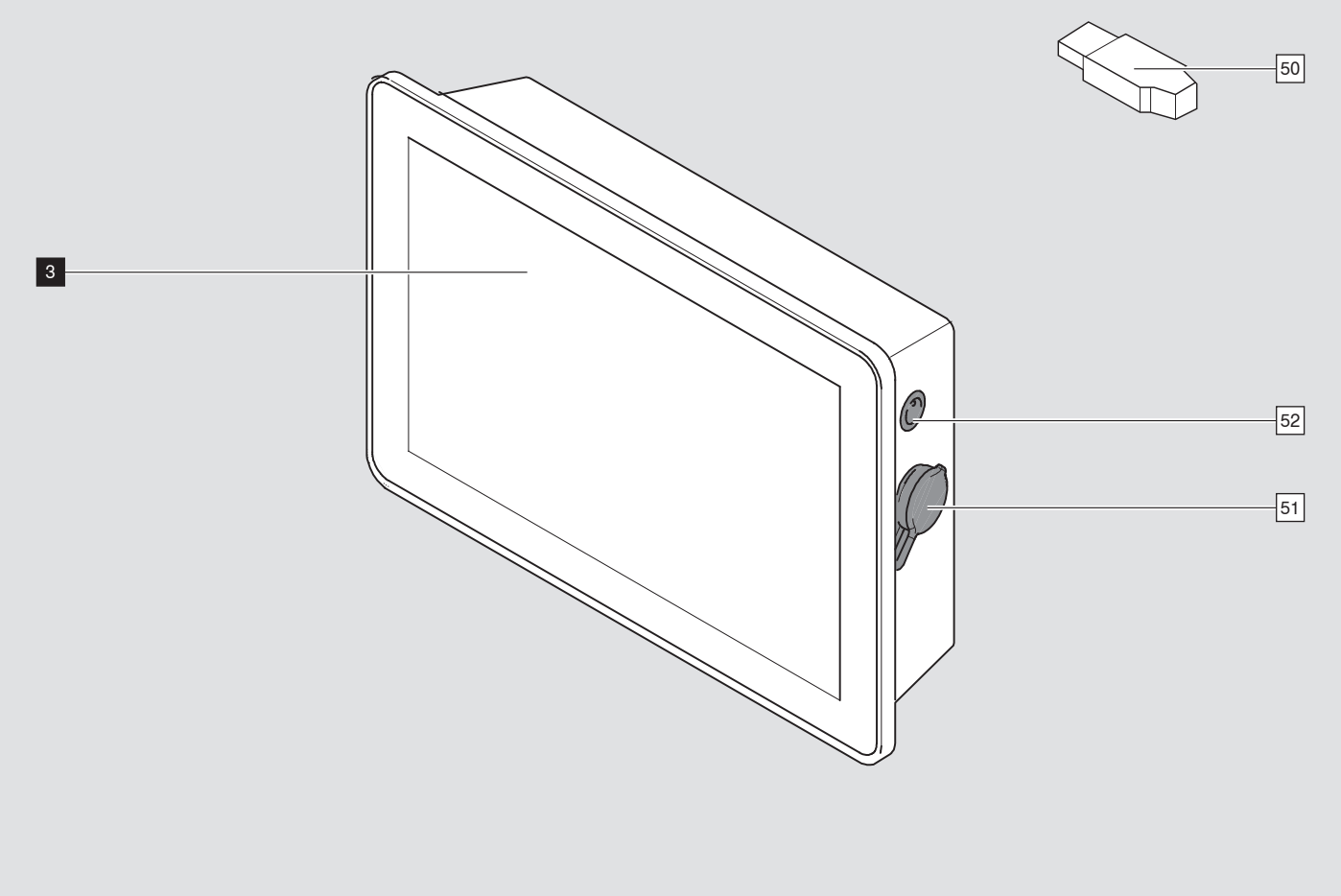

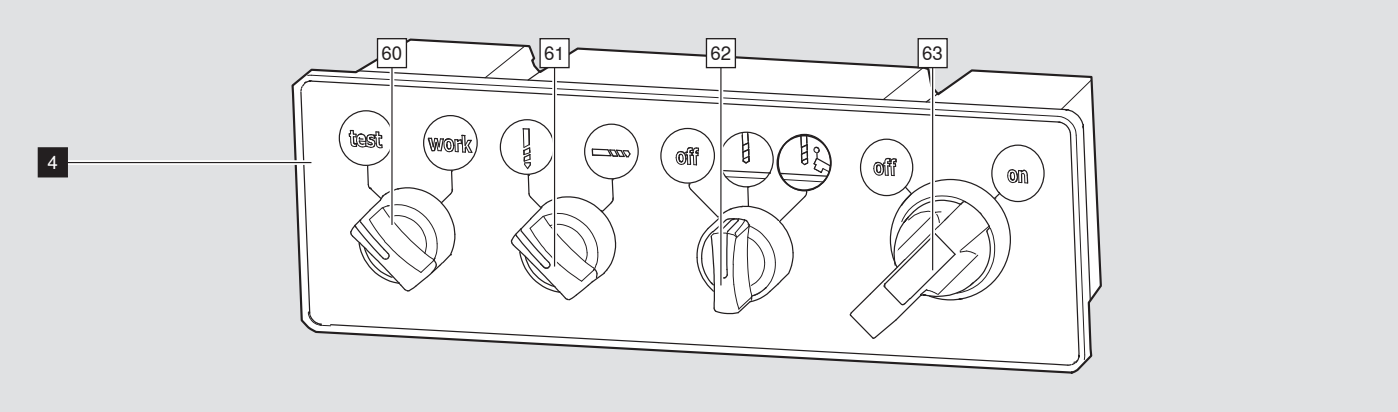

50 USB stick
51 USB port
52 Power switch

3 EASYSTICK computer
4 Operator panel
60 Work mode selector switch
61 *Drilling mode selector switch
62 Hold down clamp selector switch
63 Main switch

* The horizontal drilling function is not available with type M70E2000.

Explanation of operating and control elements

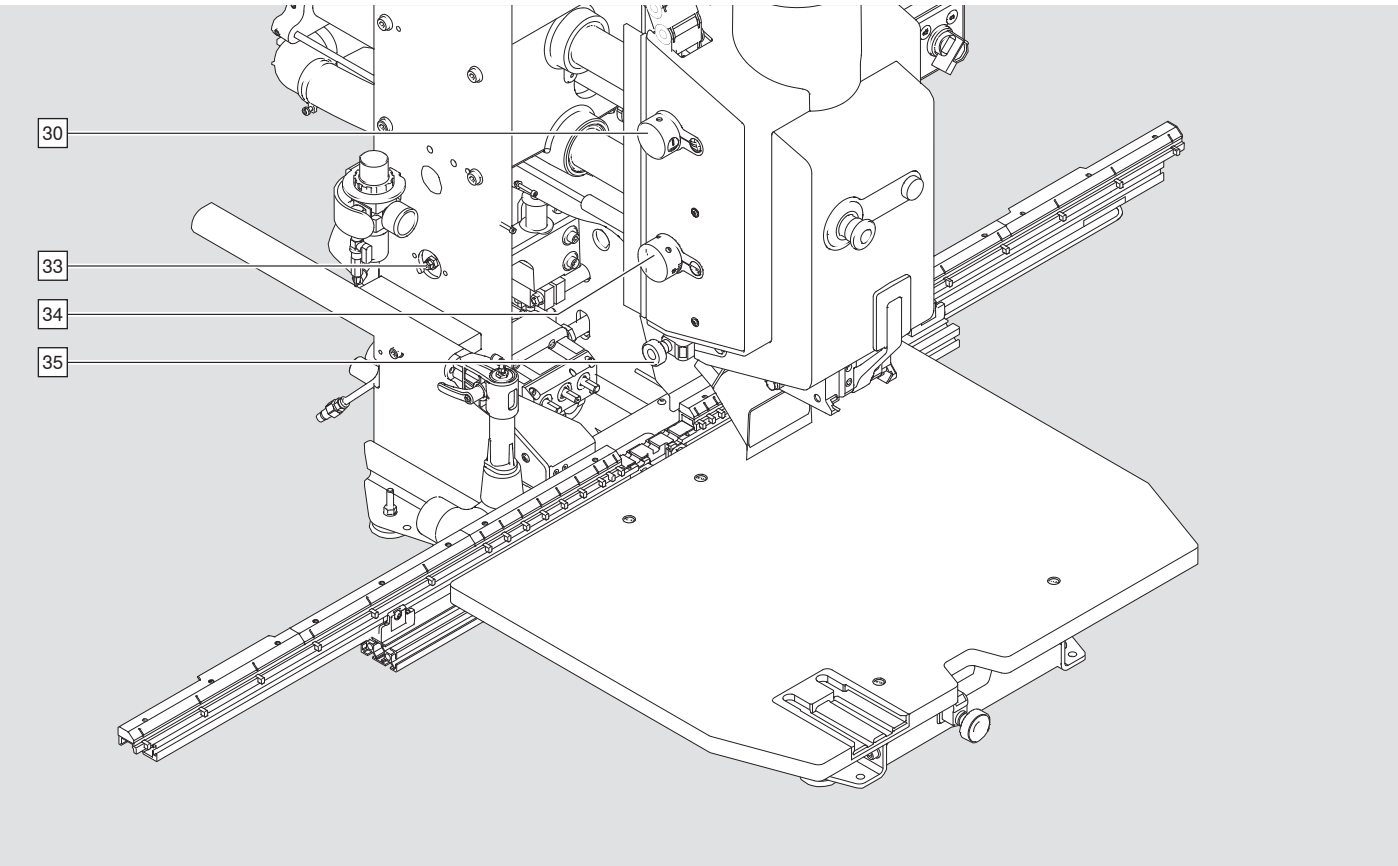

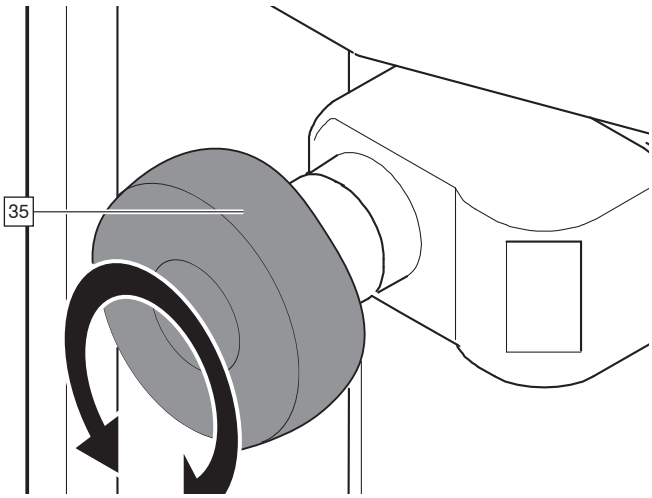

Residue material thickness adjustment knob [35]:
Adjustment range: 2 - 37 mm

i NOTE

- The residue material thickness pertains to drill length 57 mm

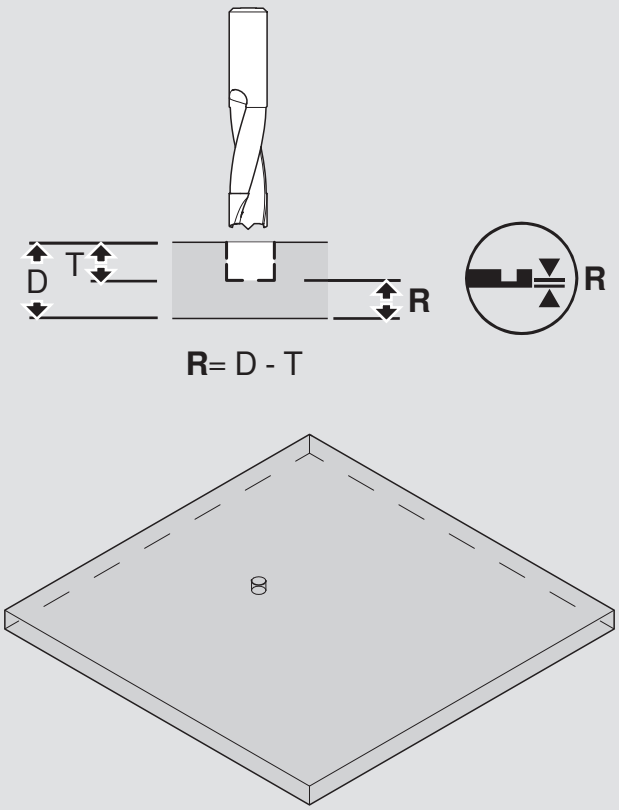

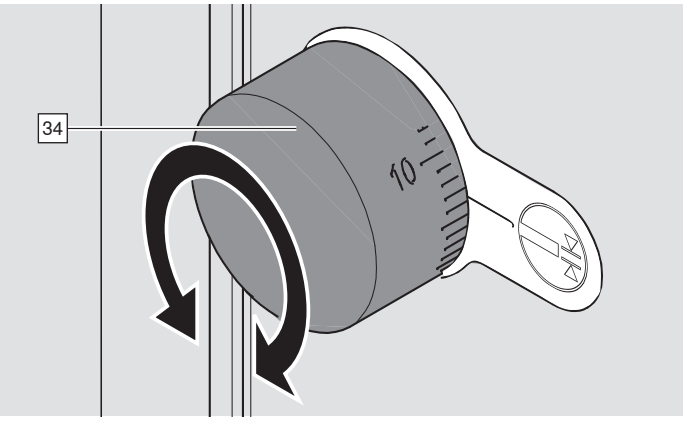

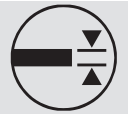

Board thickness adjustment knob [34]
Setting the board thickness also sets the brake point (rapid speed/creep speed).

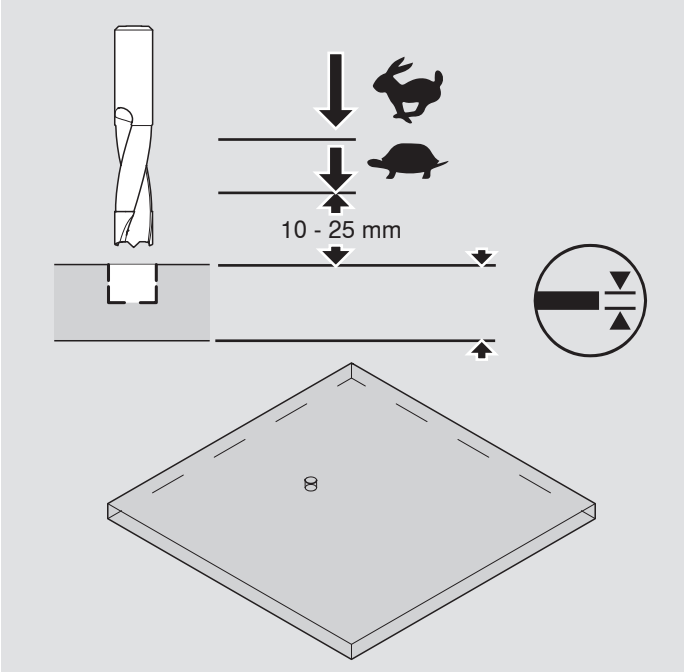

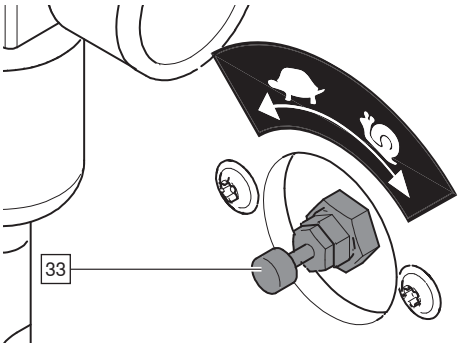

The creep speed can be set using this revolving knob [33].

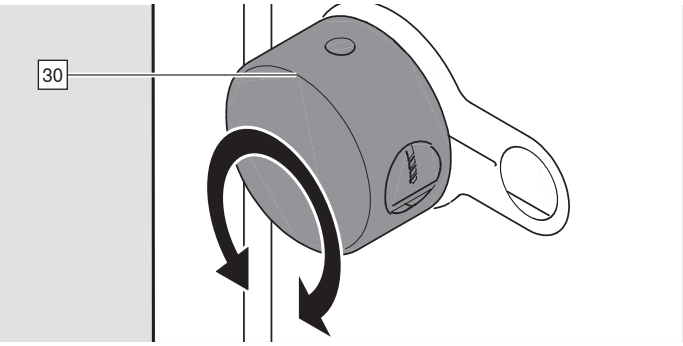

After the drilling process, the drill unit returns to the starting position.

After the drilling process, the drill unit does not move up completely. This is recommended for continued cycles for line drilling and knocking in hinges.

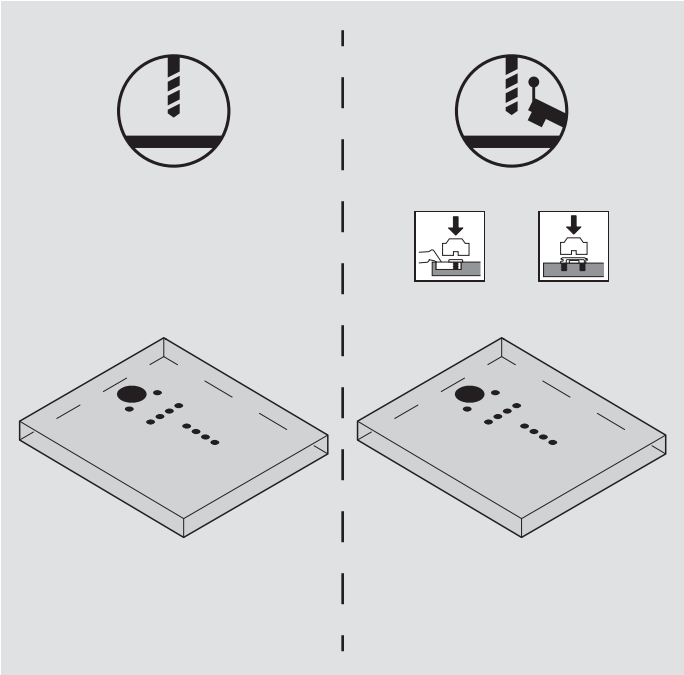

Explanation of operating and control elements

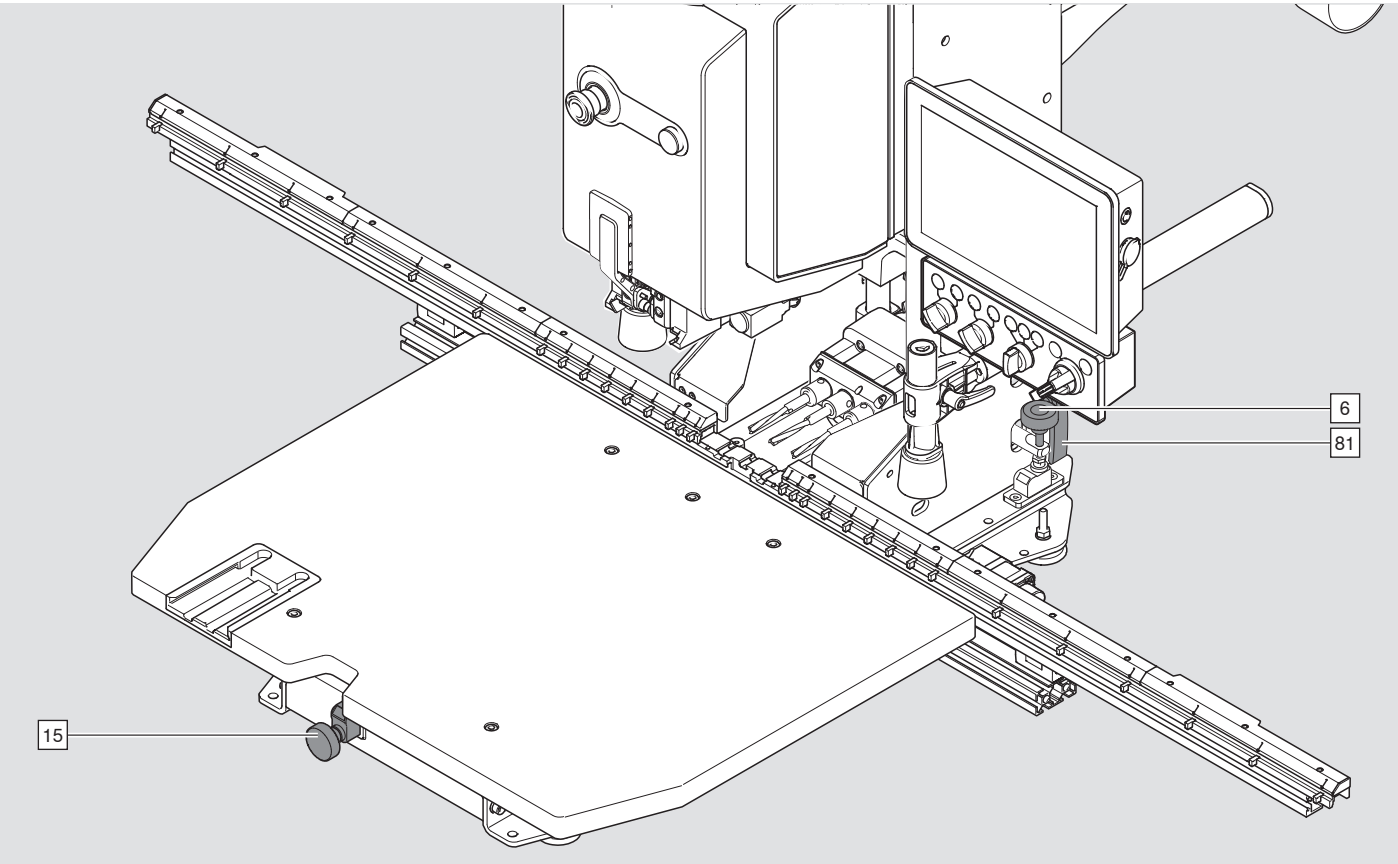

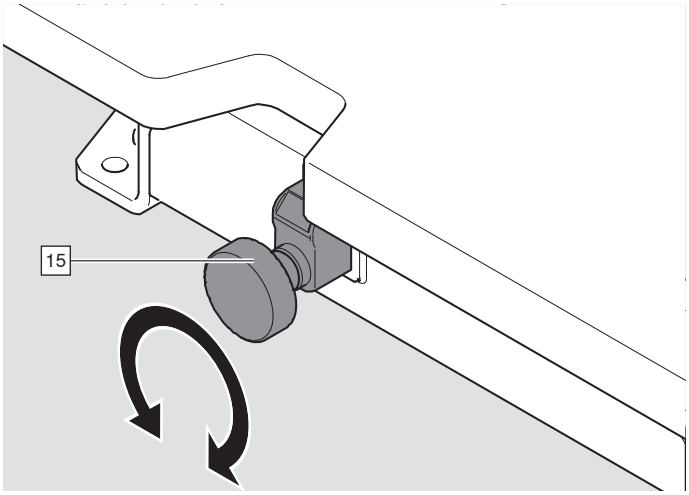

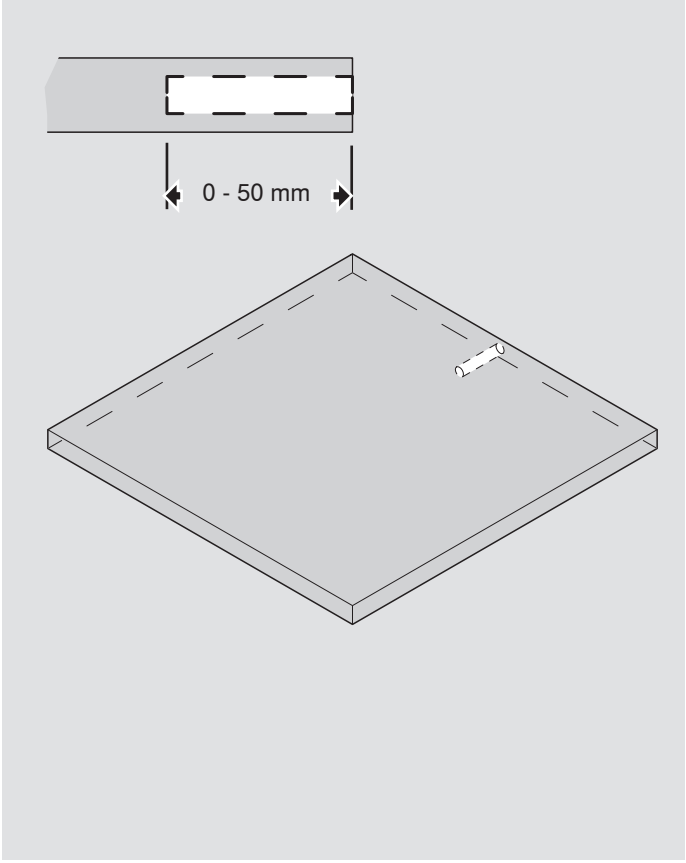

Drilling depth adjustment knob [15] for horizontal drilling.
Drilling depth adjustment range: 0 - 50 mm.

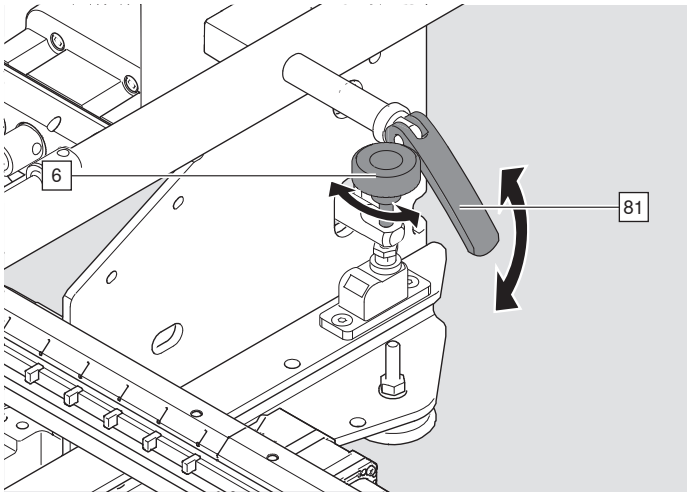

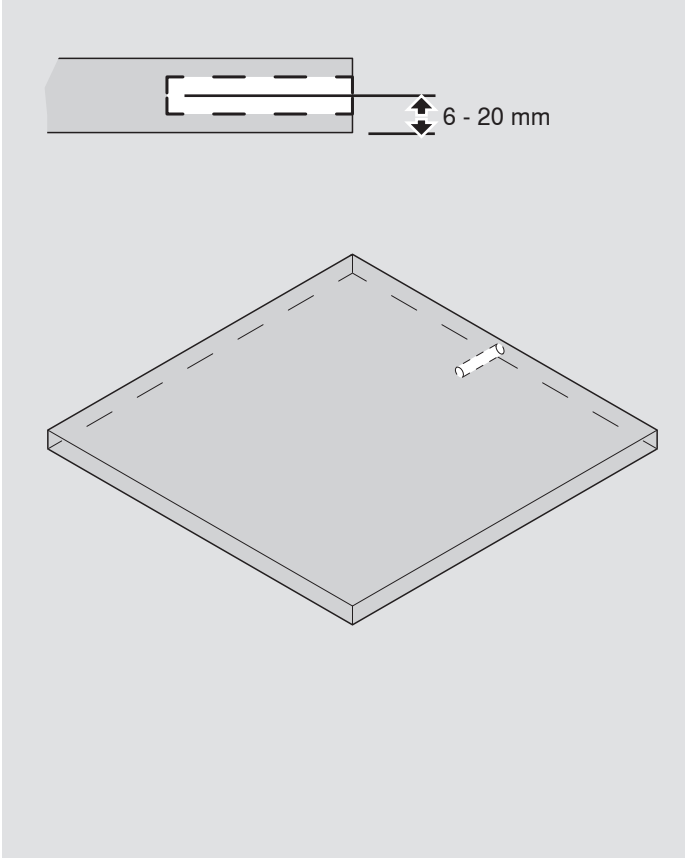

Height adjustment knob [6] for horizontal drilling.
Drilling height adjustment range: 6 - 20 mm.
A clamping lever [81] secures the setting.

Explanation of operating and control elements

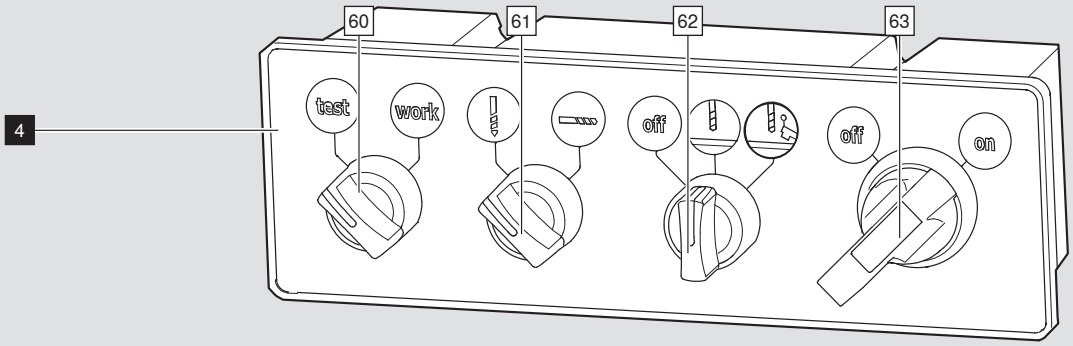

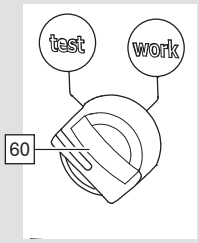

Test mode:
Low feed rate. (creep speed)
No drilling possible.

Work mode:
Normal feed rate
Vertical and horizontal drilling possible.

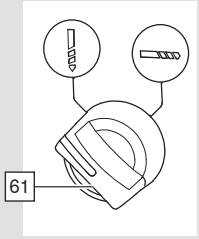

Drilling mode: vertical drilling.

*Drilling mode: horizontal drilling.
* The horizontal drilling function is not available with type M70E2000.

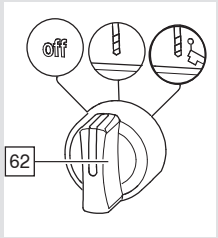

Hold down clamp operating mode:
The hold down clamps remain shut off.

When you press the start button [20], the hold down clamps [7] move down.
The work piece is clamped during the drilling process. When you release the start button [20], the hold down clamps [7] move up.

Mode: drilling and knock-in.
See chapter "Drilling and knock-in". (for horizontal drilling - "Removing chips")

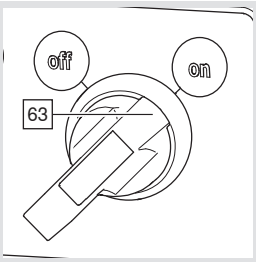

The main switch does not disconnect the assembly machine from the mains. Please note that the main switch does not disconnect the assembly machine from the pressurised air. No pneumatic motion is possible due to the use of solenoid valves.

Main switch: "ON"
The assembly machine is ready for operation.

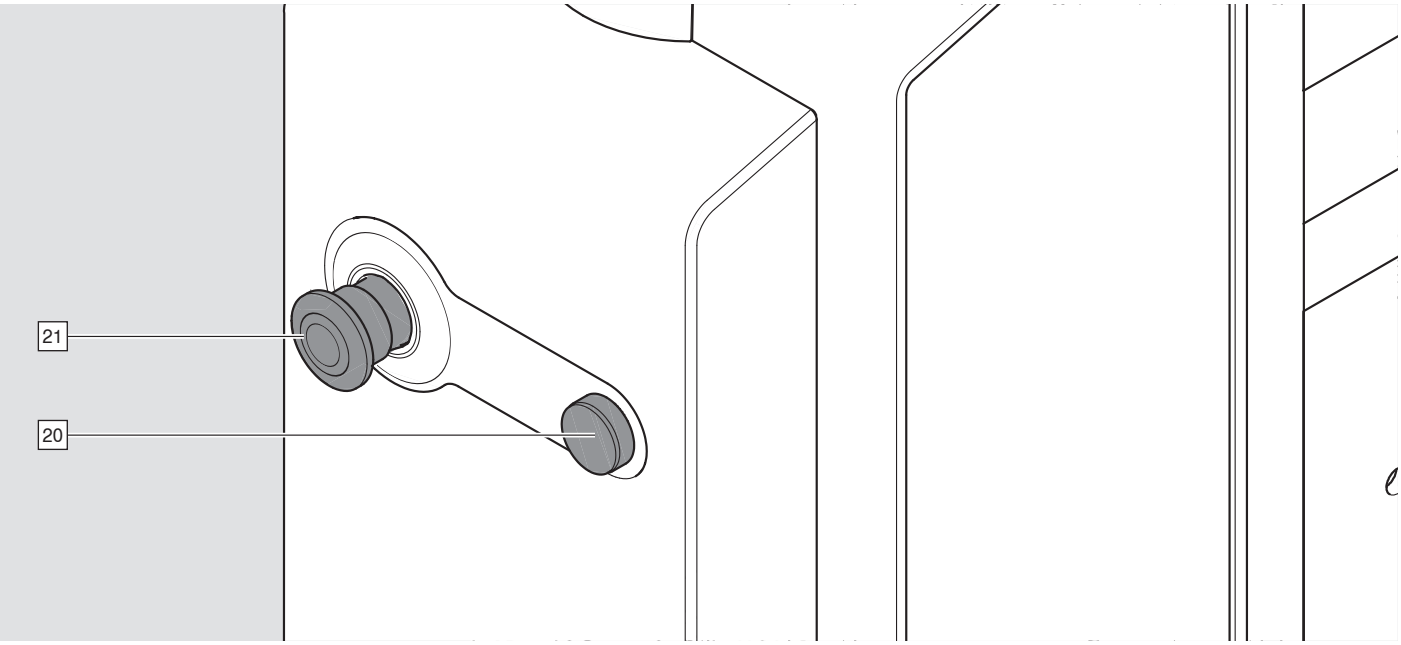

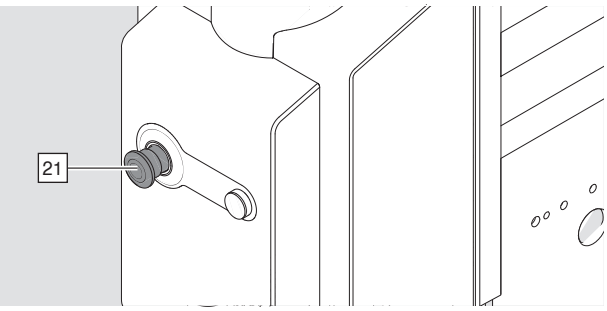

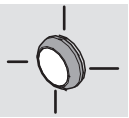

Start button [20] flashes slowly:

- Horizontal drilling mode [61] - Horizontal hold down clamp [11] not clamped.
- Horizontal drilling mode [61] - EASYSTICK ruler [9] is together.
- Drilling / knock-in mode [62] the Y measurement is over 100 mm

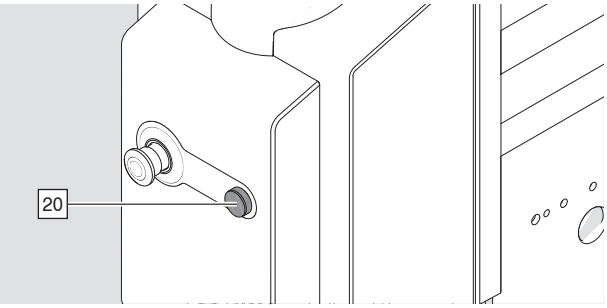

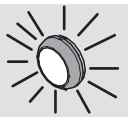

Start button [20] flashes rapidly:

- The emergency stop switch [21] is pressed.

For further flashing modes see chapter "What to do when"

Briefly press the start button [20] 2x:

- The work piece is clamped via the vertical hold down clamp [8].

Press and hold the start button [20]:

- The work process (drilling / knock-in) is carried out.

Explanation of operating and control elements

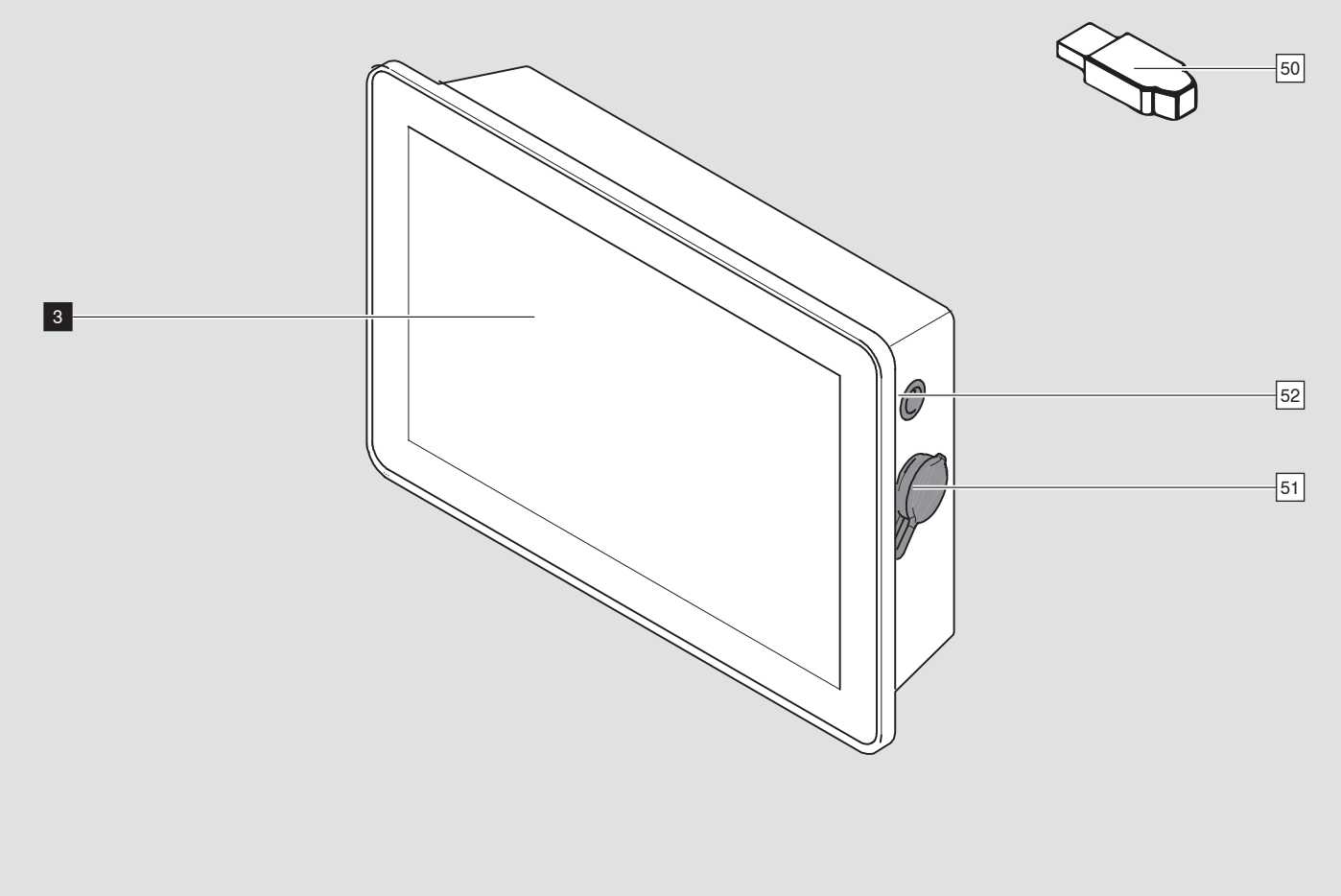

[51] USB port:	used for importing EASYSTICK computer updates, and importing Blum planning data.
[52] Power switch:	switches the EASYSTICK computer on/off.

Connecting the pressurised air

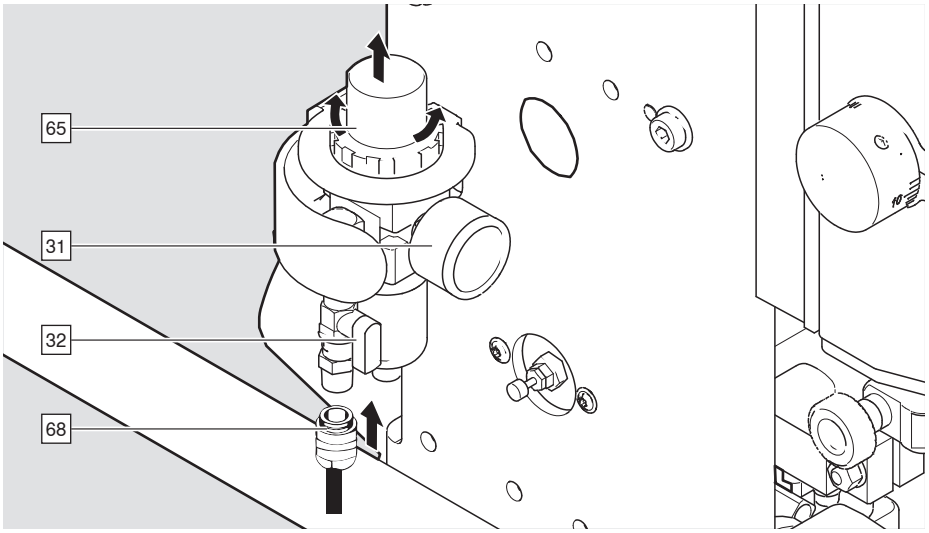

NOTE

- During the following procedure, the drill unit makes an upward motion.
- Only oil-free pressurised air may be used.

➢ Connect the air supply [68] to the air filter unit.
➢ Open the compressed air shut-off valve [32].
➢ The pressure indicated on the pressure gauge [31] should be 5 - 7 bar / 73 - 101 psi / 0,5 - 0,7 MPa.
➢ The pressure can be adjusted using the rotary knob on the filter pressure regulator [65].

Air consumption per work cycle is 1.5 litres.

Connecting the extraction system

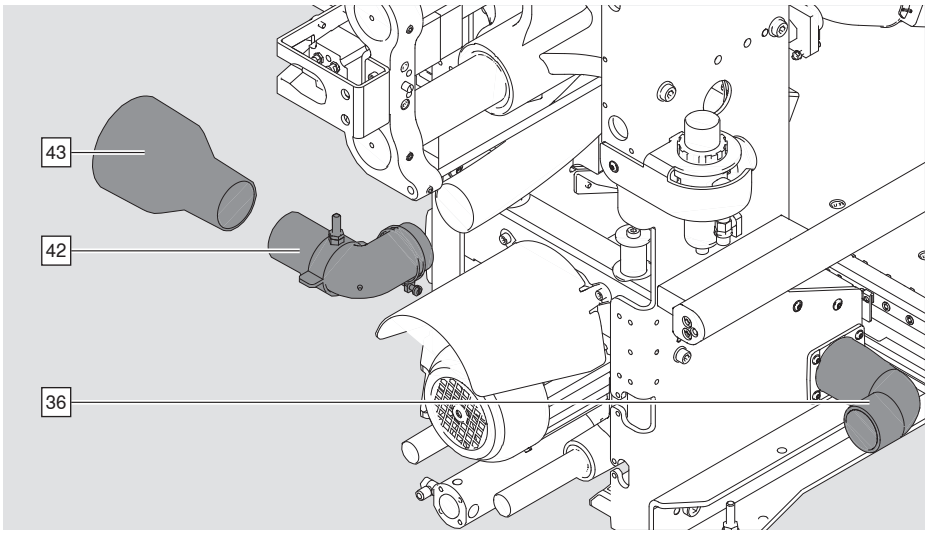

➢ Insert the extraction hose into the upper extraction socket [42, 43] and secure it.
➢ Insert the extraction hose into the lower extraction socket [36] and secure it.
➢ Accessories, see www.blum.com.

NOTE

- Ensure that the average air velocity for the extraction system is at least 20 m/sec.
- The negative pressure should be 250 - 300 mbar.
- Volume flow 570 m³/h.

Earthing the extraction system

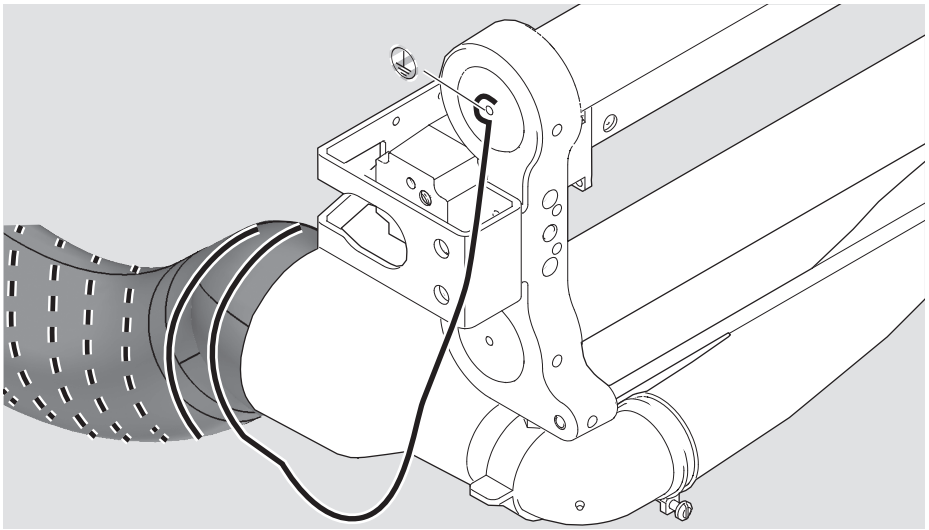

➢ Connect the spiral wire of the suction hose to the assembly machine.

Connecting the power supply

➢ Set the main switch [63] to the "OFF" pos.

NOTE

- The assembly machine is designed for the voltage listed on the rating plate and cable label.
- The outlet must be fitted with a PE protective contact.
- The outlet must be fitted with a neutral conductor.
- The outlet must have a 16 A fuse.
- After finishing work, disconnect the assembly machine from the power supply.
- Avoid overloading the outlet.
- Do not use the assembly machine together with an extension lead or cable drum.
- Use a separate protected outlet for the extraction system and the assembly machine.

➢ Insert the electrical plug [70].

➢ If no electrical plug is installed, have the plug installed by an authorised electrician.

Adjusting the motor rotation

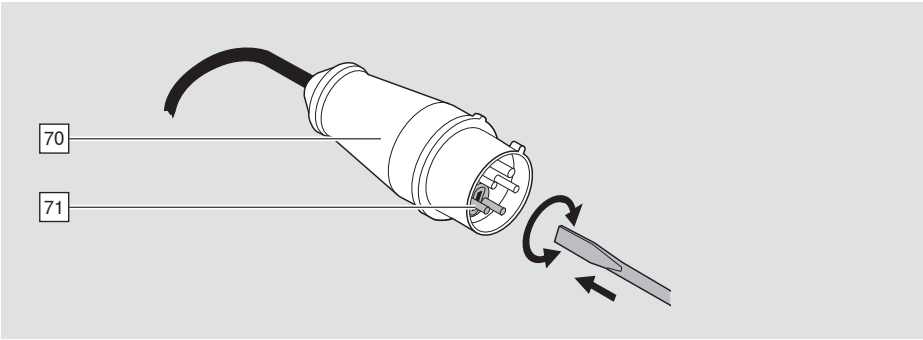

- ➢ Main switch [63] to "OFF" pos.
- ➢ Disconnect the assembly machine from the power supply.
- ➢ Rotate the turnover plate [71] in the plug [70] by 180 deg. by pressing and turning (where applicable).
- ➢ Recheck the motor rotation.

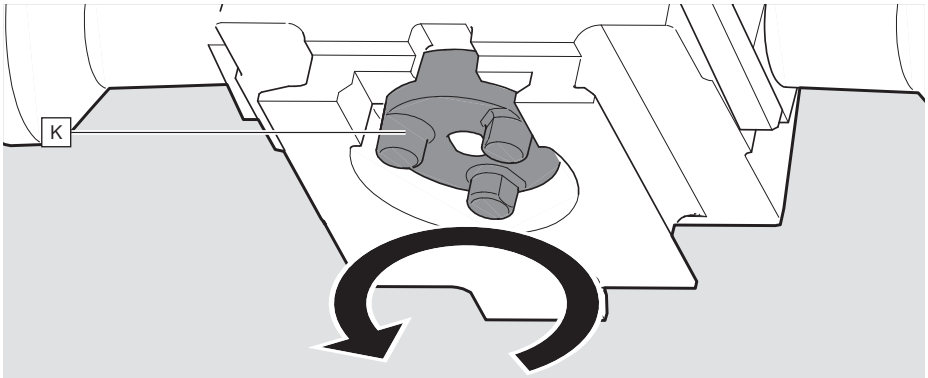

View of the coupling [K] from below:
Coupling [K] direction of rotation: anti-clockwise.

EASYSTICK registration

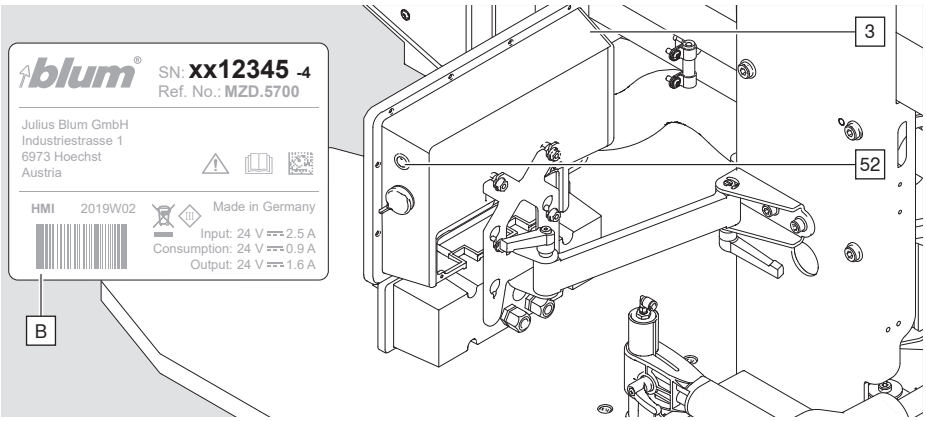

- ➢ Switch on the assembly machine [63] and EASYSTICK computer [52].
- ➢ Read off the serial number on the rating plate [B] of the EASYSTICK computer [3].

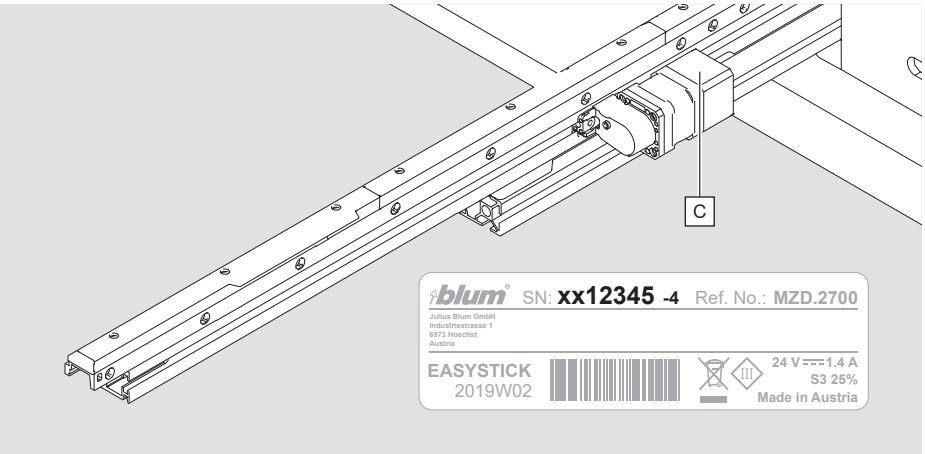

➢ Read off the serial number on the rating plate [C] of the EASYSTICK ruler.

Entering serial numbers

i NOTE

- You have 30 days within which to register your EASYSTICK.

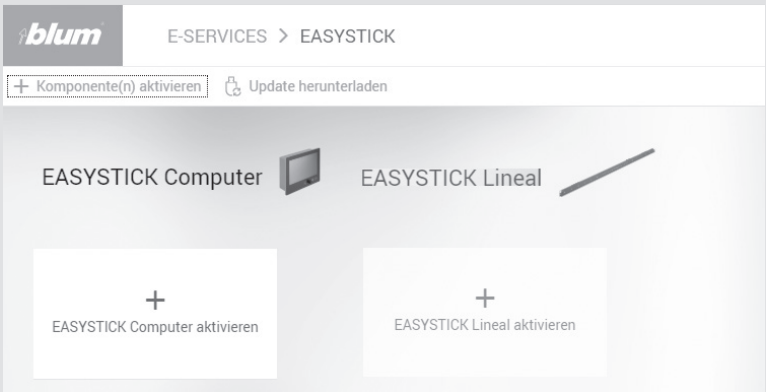

i NOTE

- EASYSTICK registration entitles you to receive updates and the latest information.

➢ Register the serial numbers in the EASYSTICK portal and follow the instructions.

Updating EASYSTICK

Blum updates are software updates that keep your EASYSTICK computer updated to the latest version with

- new Blum fitting solutions
- new and improved functions
- performance and troubleshooting optimisations

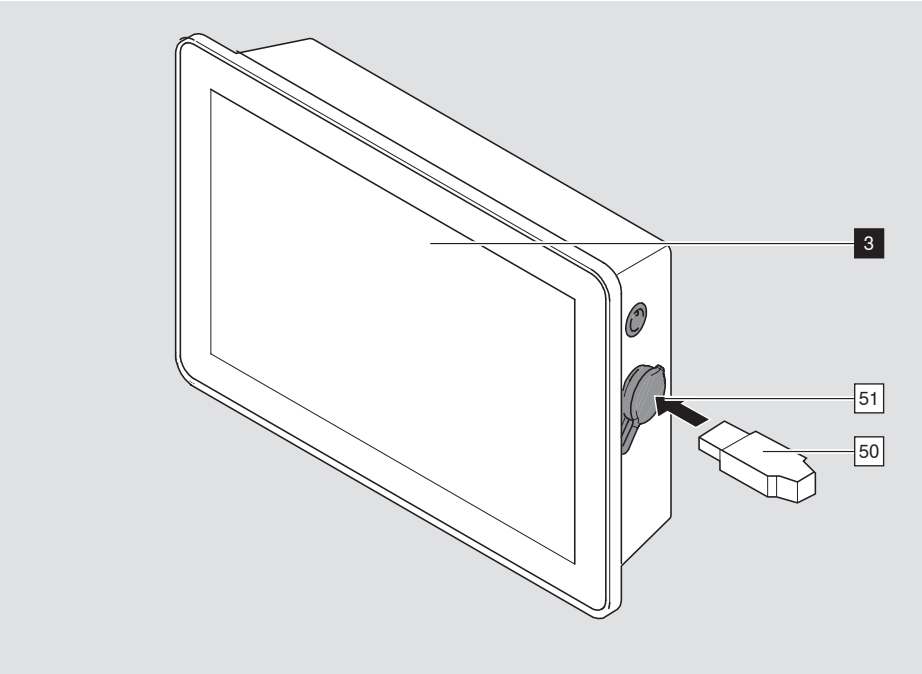

➢ Log in to the EASYSTICK portal.
➢ Load the update onto a USB stick [50].
➢ Insert the USB stick [50] into the EASYSTICK computer USB port [51].
➢ Follow the instructions on the EASYSTICK computer screen [3].

i NOTE

- The assembly machine and EASYSTICK computer must both be switched on for registration and when performing updates.
- The extension ruler must be installed with the update.
- The cabling must be complete.

Setup

WARNING

Serious cuts.
Failure to heed this warning may result in personal injury.

➢ Only one person at a time should operate the assembly machine.

➢ Set the work mode selector switch [60] to TEST for all set-up work.

NOTE

- The drill bits do not rotate when pressing the start button [20].
- All movements are performed slowly.

Machine coordinates system

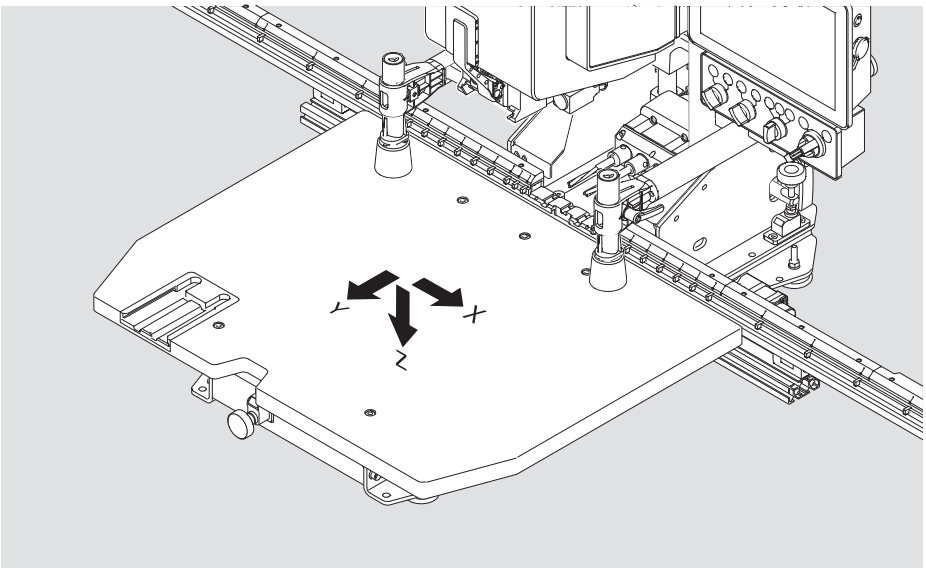

Basic settings
Vertical drilling

Operator panel

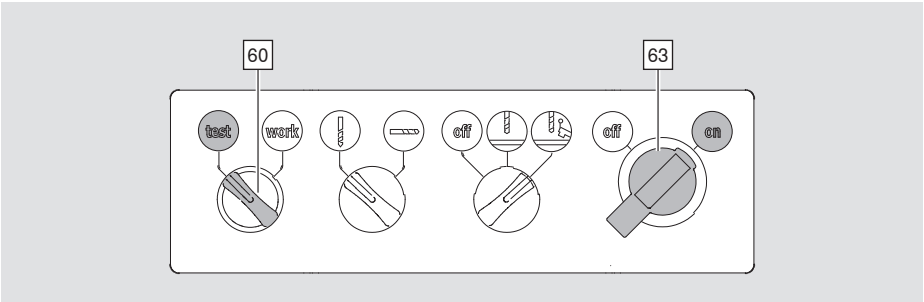

➢ Set the main switch [63] to "ON".

➢ Set the work mode selector switch [60] to"TEST".

Setting the board thickness

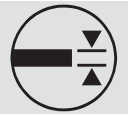

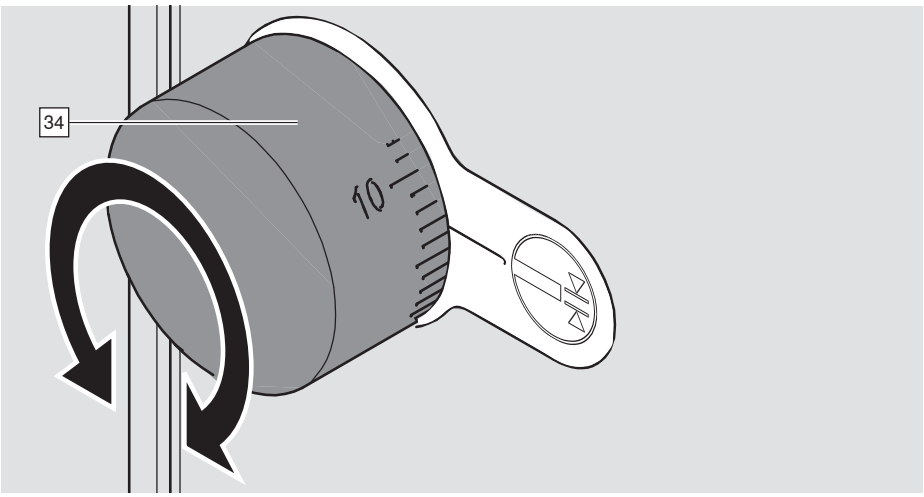

➢ Set the board thickness [34].
For more information, see chapter "Description of operating elements".

Setting the residue material thickness

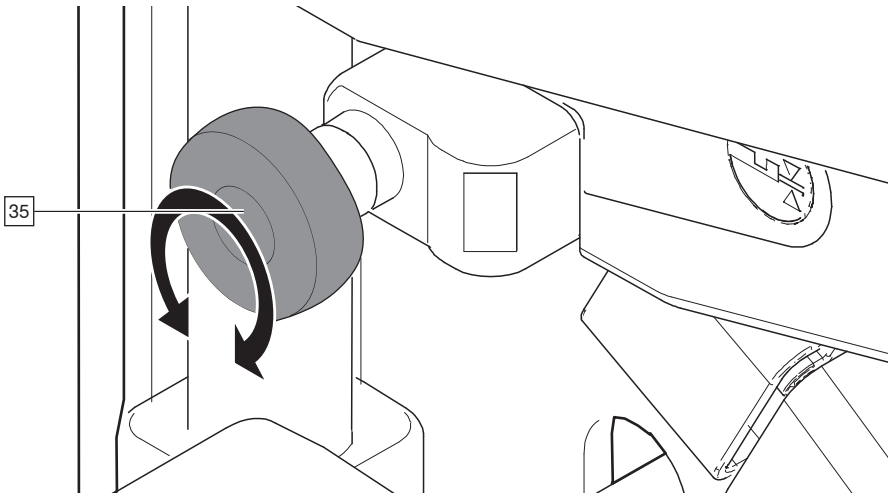

➢ Set the residue material thickness [35].

For more information, see chapter "Description of operating elements".

The board thickness pertains to drill bit length of 57 mm.

*Basic settings Horizontal drilling

* The horizontal drilling function is not available with type M70E2000.

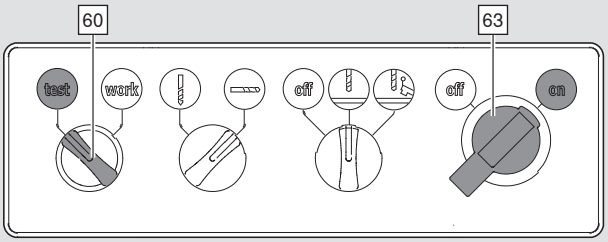

➢ Set the main switch [63] to "ON".
➢ Set the work mode selector switch [60] to"TEST".

Setting the horizontal drilling height

i NOTE

■ Always set the target value in the direction - from lower value to higher value.

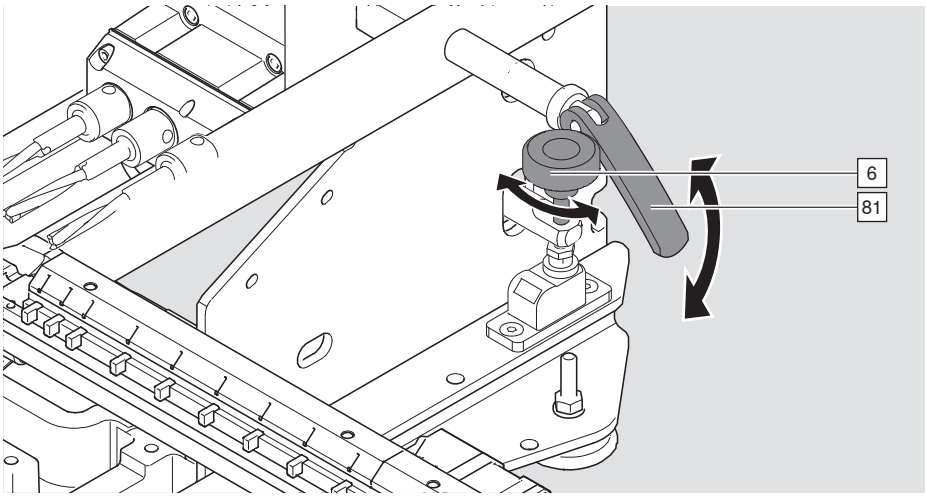

➢ Open the clamping lever [81].
➢ Set the desired height of the horizontal drilling via the hand wheel [6].
➢ Close the clapmping lever [81].

Setting the horizontal drilling depth

i NOTE

■ Always set the target value in the direction - from higher value to lower value.

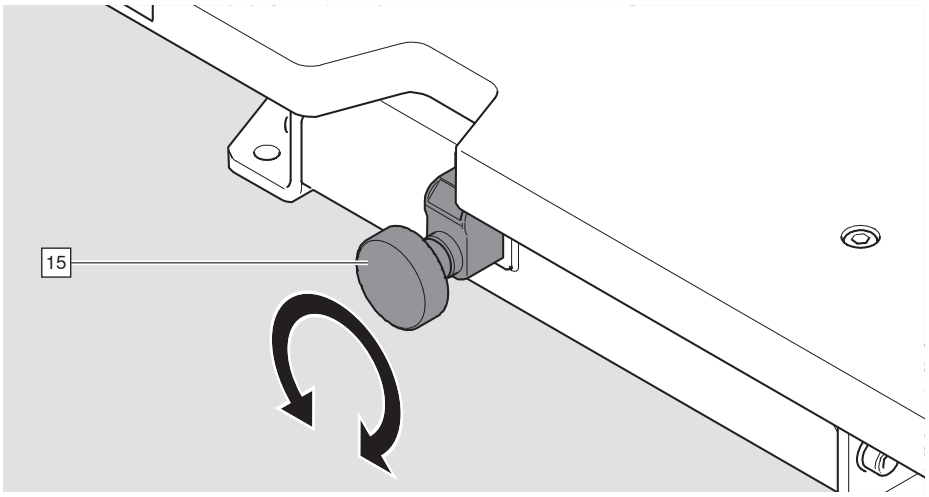

➢ Set the desired depth of the horizontal drilling via the hand wheel [15].

Vertical drilling setup (Drilling head)

Equip the drilling head [25].

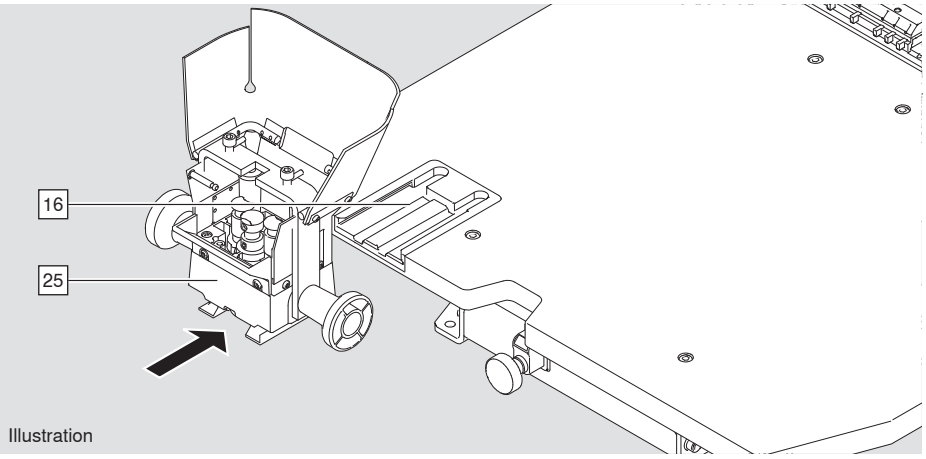

Illustration

➢ Always unclamp the drilling head [25] when equipping.

➢ Park the drilling head [25] in the drilling head storage [16].
(press-in frame not part of scope of delivery - optional)

Clamping the drill bit

Length must be 57 mm.

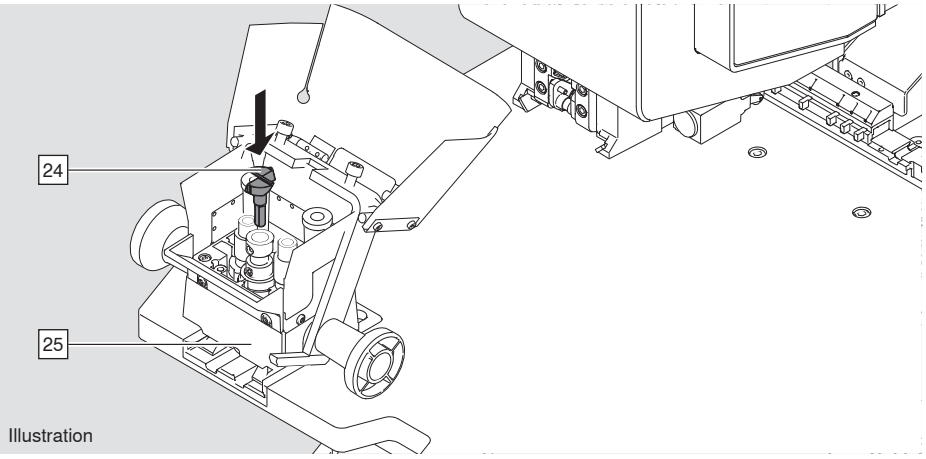

Illustration

➢ Clamp the drill bit [24] in the drilling head [25].
Pay attention to the direction of rotation.

Clamping the insertion ram

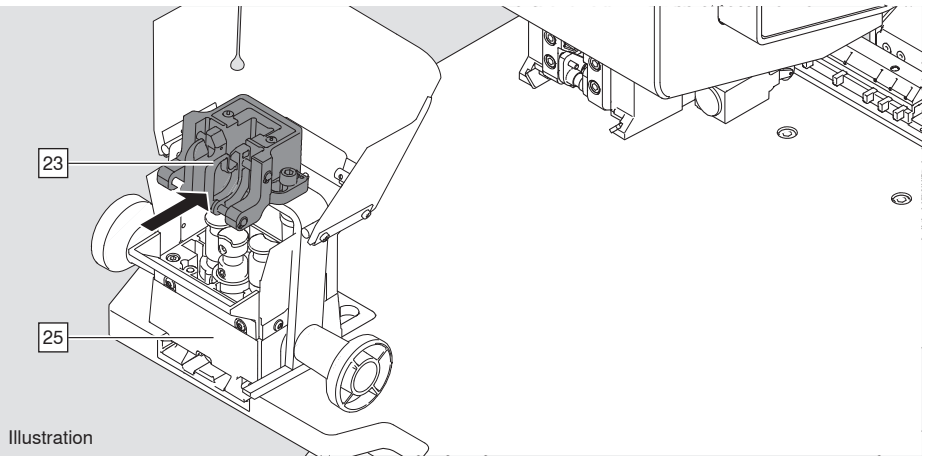

Illustration

➢ Install the insertion ram [23] on the drilling head [25].

Clamping the drilling head

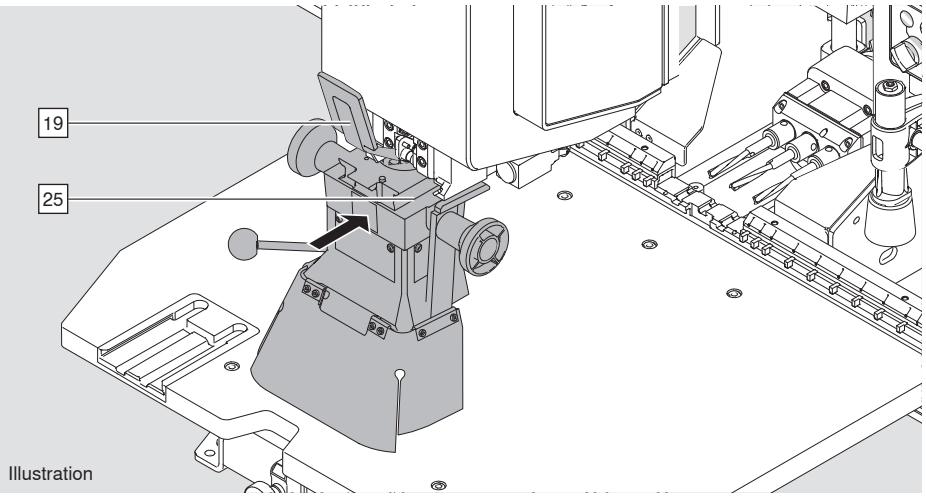

Illustration

➢ Push down the locking lever [19].
➢ Slide the drilling head [25] into the drilling head attachment.

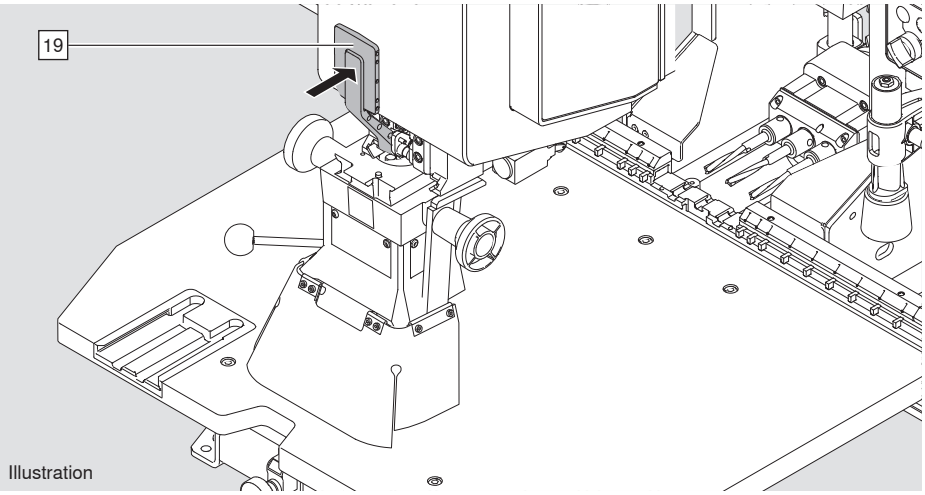

Illustration

WARNING

Ejecting parts can cause injury.

Damage to the coupling or drilling head possible.

➢ Push up the locking lever [19].

WARNING

Drill bits can cause serious injury.

➢ When using the MZK.224S (11 spindles) drilling head, the additional table [14] must be used.

Insertion ram assembly

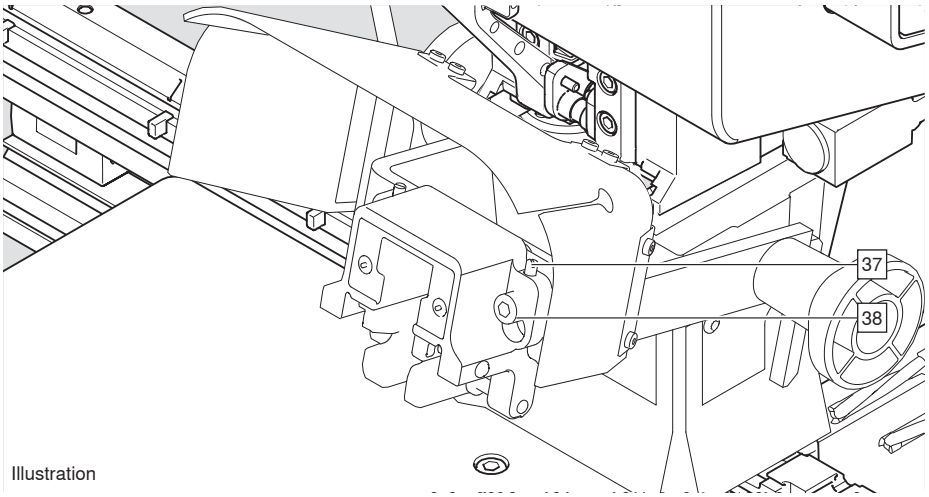

Illustration

➢ Loosen the fixing screws [38].

➢ Correct the position of the insertion ram by setting the adjustment screws [37].

➢ Retighten the fixing screws [38].

*Horizontal drilling setup

* The horizontal drilling function is not available with type M70E2000.

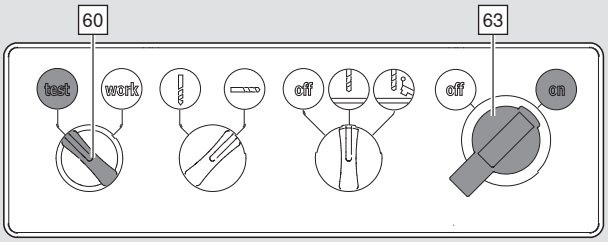

Clamping the drill bit

Drill bit equipment

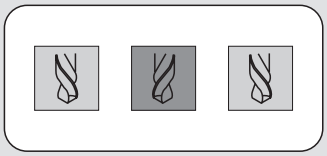

red black red

➢ Set the main switch [63] to "ON".
➢ Set the work mode selector switch [60] to"TEST".

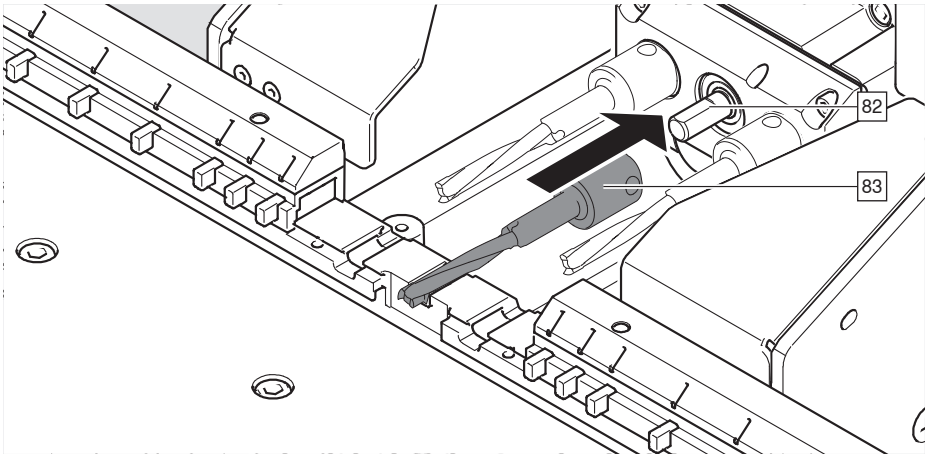

➢ Only use Blum original drill bits.
➢ Slide the drill bit [83] onto the drilling spindle up to the stop [82].
➢ Tighten the screws securely.

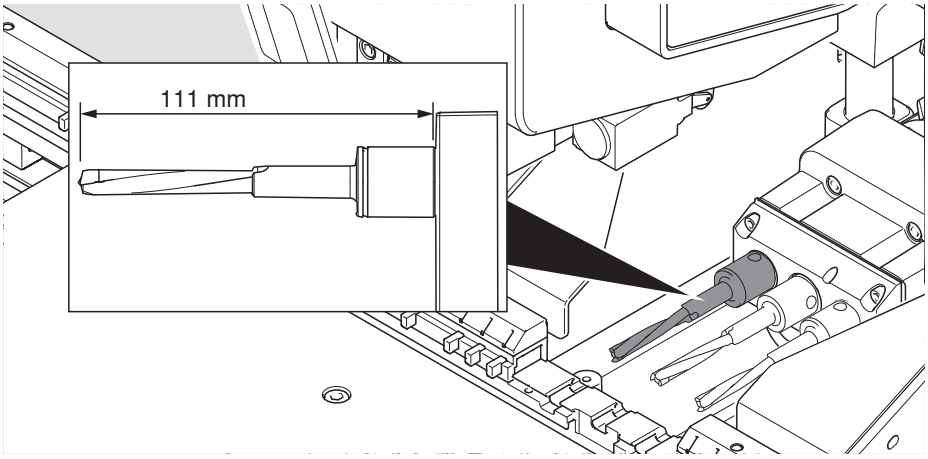

i NOTE

- The length from the cutting edge to the gearbox must be 111 mm.
- Always check that the drill bit is secure before start-up.

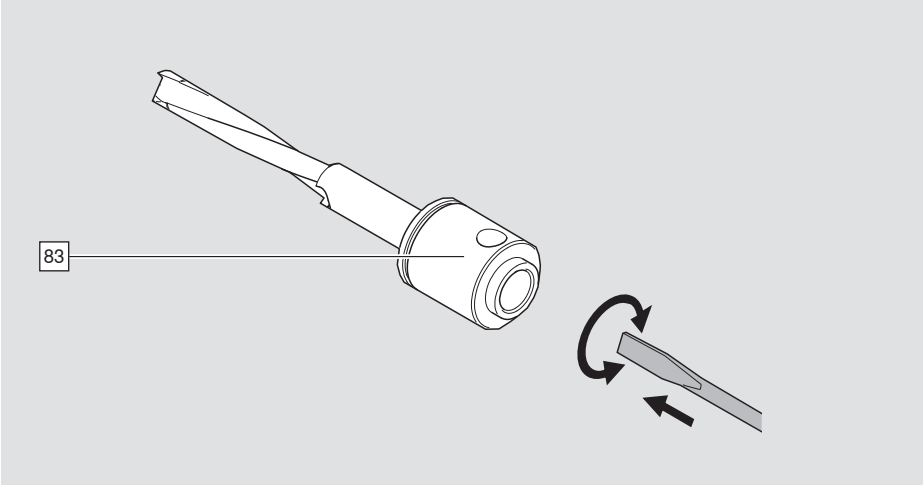

➢ The length of the drill bit [83] can be adjusted.
Use a screwdriver.

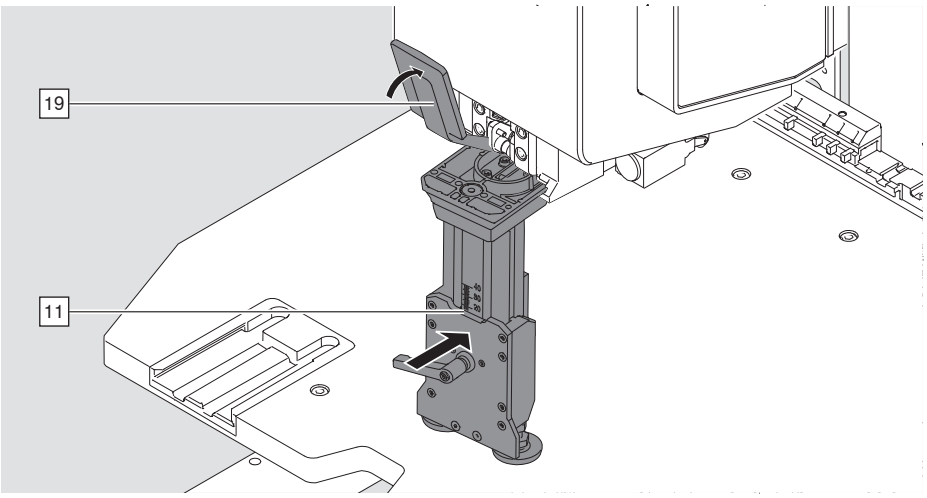

➢ Insert the horizontal hold down clamp [11].
➢ Close the locking lever [19].

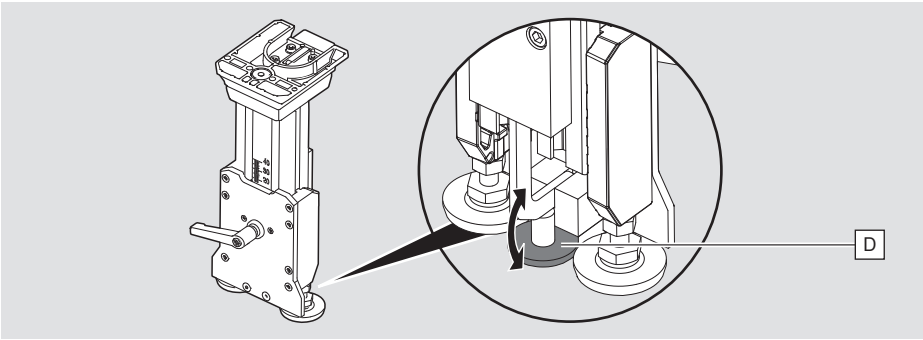

➢ Board release [D] must be easily movable.

EASYSTICK

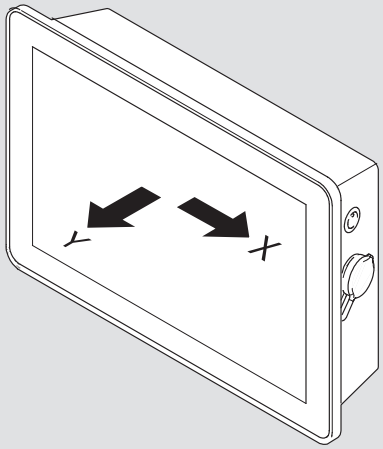

➢ The EASYSTICK computer carries out the planning.

➢ Do not press the start button [20] during the EASYSTICK process, this will cancel the process.

WARNING

Drill bits can cause serious injury.

- ➢ Only one person at a time should operate the assembly machine.
- ➢ All items except for the work piece should be removed from the work area [E] of the assembly machine.
- ➢ Keep your hands and other objects away from the work area [E] of the assembly machine.
- ➢ Caution crush danger in the area of the hold down clamp.
- ➢ Wear eye protection.
- ➢ Wear ear protection.
- ➢ Wear suitable work clothing.

Maximum work piece dimensions

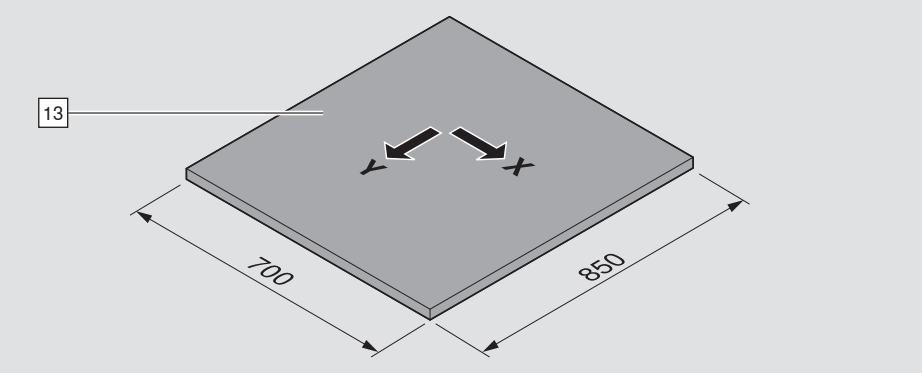

Larger work pieces [13] must have additional clamping, support and attachment. Small work pieces [13] that do not fit in the hold down clamps must be clamped using suitable means.

Positioning the work piece [13]

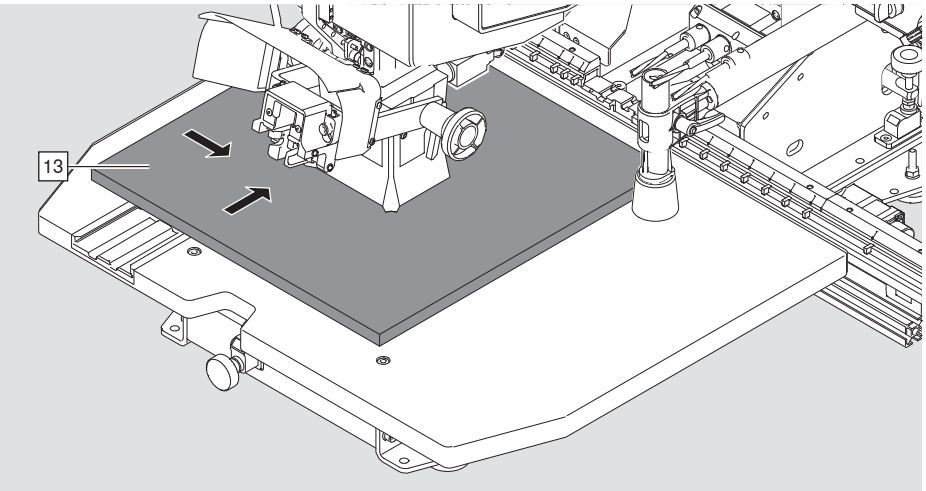

➢ Check the work table for soiling and remove dirt as necessary.
➢ Push the work piece against the stop and ruler.

Hold down clamp

NOTE

■ We recommend using hold down clamps to ensure safe and precise processing of the work piece.

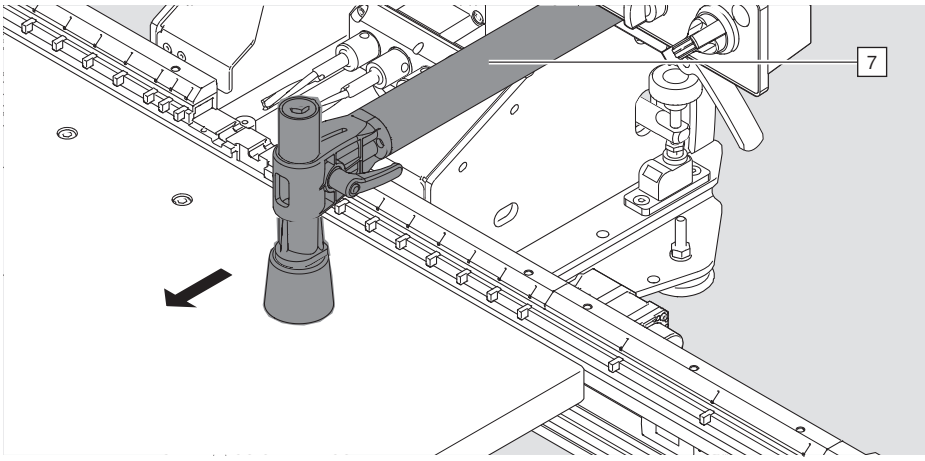

➢ Pull the hold down clamp [7] over the work piece [13].
➢ Check for any collisions.

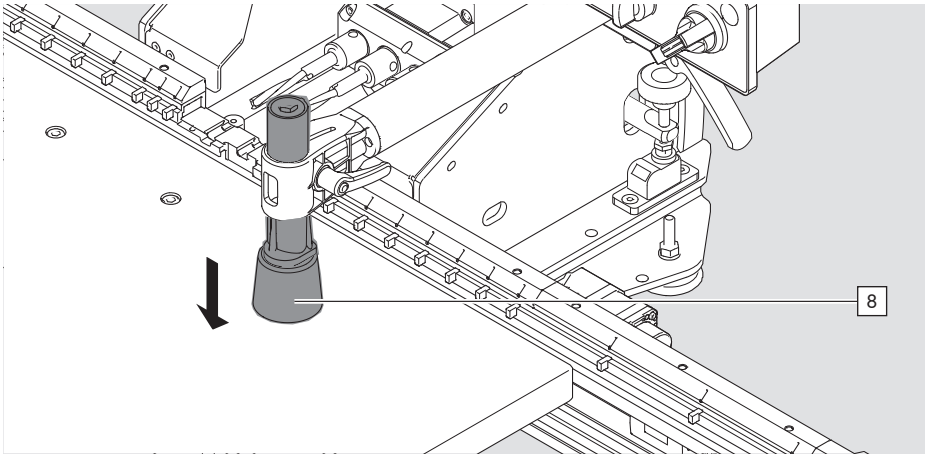

➢ The hold down clamp [7] must be 3 mm over the work piece.
➢ Set the height of the hold down clamp [8].

Vertical drilling

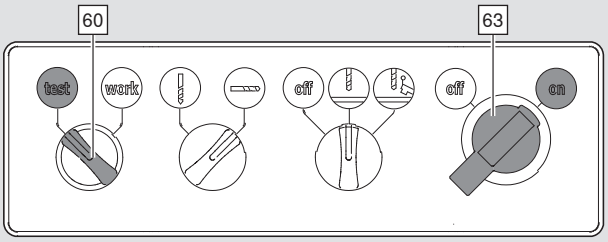

➢ Set the main switch [63] to "ON".

➢ Set the work mode selector switch [60] to"WORK".

i NOTE

- The extraction system must always be switched on in order to remove wood chips and dust.

➢ Switch on the extraction system.

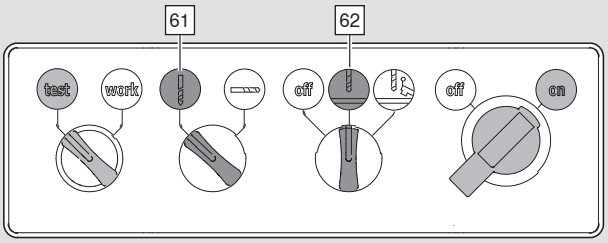

i NOTE

- We recommend using the hold down clamps to ensure safe and precise processing of the work piece.

➢ Set the hold down clamp mode selector switch [62] to vertical drilling.

➢ Set the drilling mode selector switch [61] to vertical drilling.

i NOTE

- If the drilling dimension Y is set to less than 20 mm, then this can lead to the drilling of the EASYSTICK ruler, ruler or stop.

Drilling and insertion

The following requirements must be met so that the drilling process can be initiated:

➢ No horizontal hold down clamp [13] may be clamped.
Clamp in the drilling head [25].

➢ The emergency stop switch [21] must be unlocked.

Drilling

WARNING

Serious cuts.
Failure to heed this warning may result in personal injury.

➢ Only one person at a time should operate the assembly machine.
➢ All items except for the work piece should be removed from the work area [E] of the assembly machine.
➢ Keep your hands and other objects away from the work area [E] of the assembly machine.
➢ Caution crush danger in the area of the hold down clamp.
➢ Wear eye protection.
➢ Wear ear protection.
➢ Wear suitable work clothing.

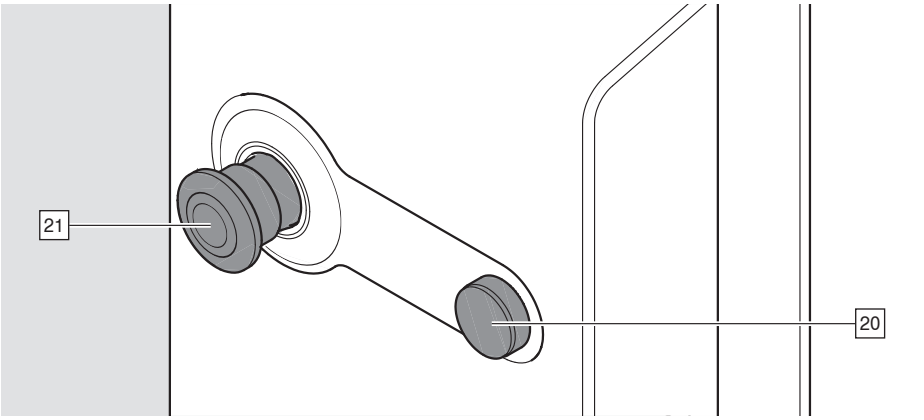

NOTE

■ The drilling process is stopped automatically when the pre-set drilling depth is reached.

➢ Press the start button [20] until the drilling process is ended automatically.

Vertical drilling and inserting

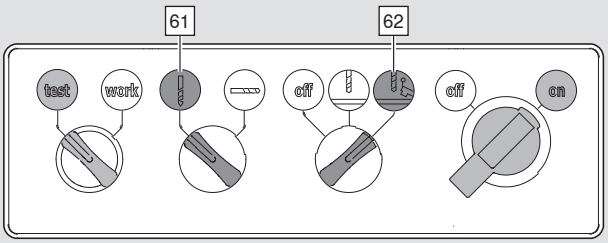

➢ Set the drilling mode selector switch [61] to vertical drilling.

i NOTE

- We always recommend using the hold down clamps to ensure safe and precise processing of the work piece.

➢ Set the hold down clamp mode selector switch [62] to vertical drilling and knock-in.

i NOTE

- If the drilling dimension Y is set to less than 20 mm, then this can lead to the drilling of the EASYSTICK ruler, ruler or stop.

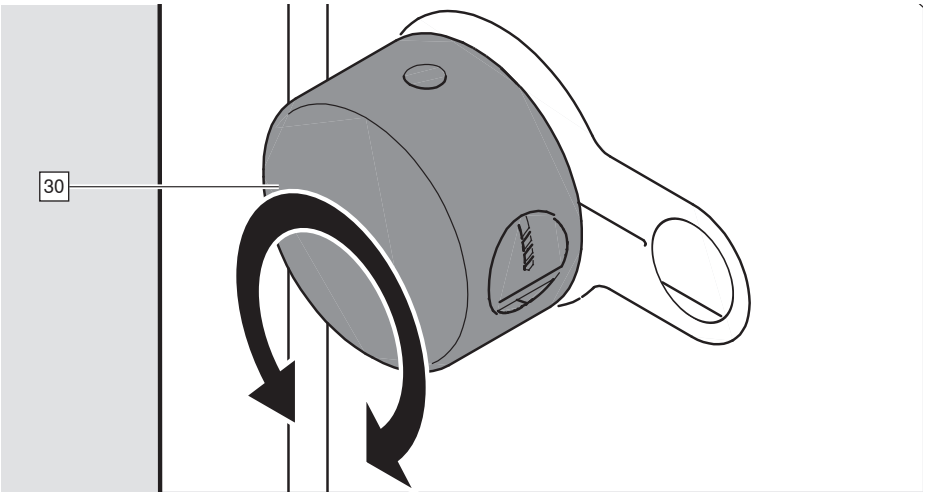

➢ Press the start button [20].
➢ Set the selector switch [30] to vertical drilling and knock-in.

Drilling and insertion

The following requirements must be met so that the drilling process can be initiated:

➢ No horizontal hold down clamp [11] may be clamped. Clamp in the drilling head [25].

➢ The emergency stop button [21] must be unlocked.

➢ The Y measurement depth must be under 100 mm.

Drilling

WARNING

Serious cuts.

Failure to heed this warning may result in personal injury.

➢ Only one person at a time should operate the assembly machine.

➢ All items except for the work piece should be removed from the work area [E] of the assembly machine.

➢ Keep your hands and other objects away from the work area [E] of the assembly machine.

➢ Caution crush danger in the area of the hold down clamp.

➢ Wear eye protection.

➢ Wear ear protection.

➢ Wear suitable work clothing.

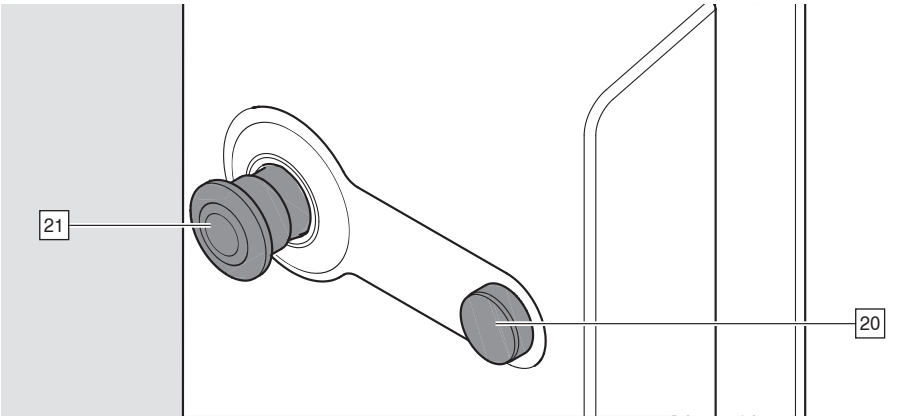

➢ Press the start button [20] until the drilling process is ended automatically.

NOTE

■ The drilling process is stopped automatically when the pre-set drilling depth is reached.

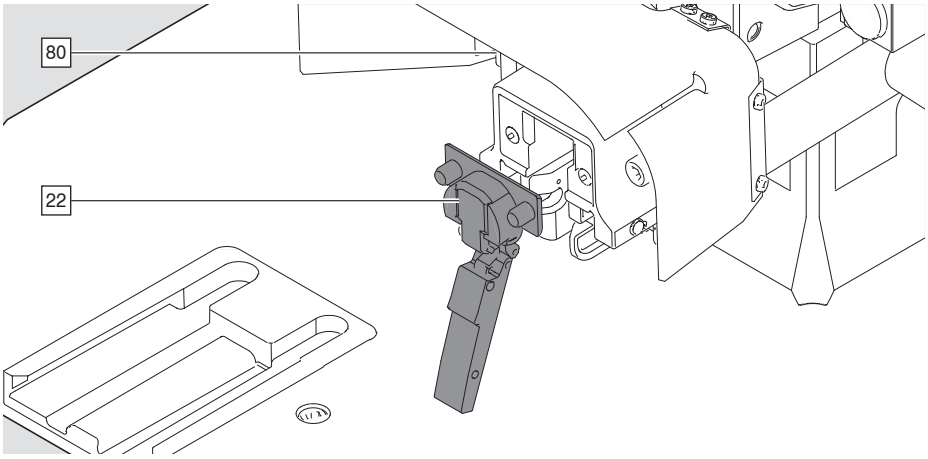

➢ Clip the fitting [22] on to the insertion ram.
➢ Swivel down swing arm [80].

Insertion

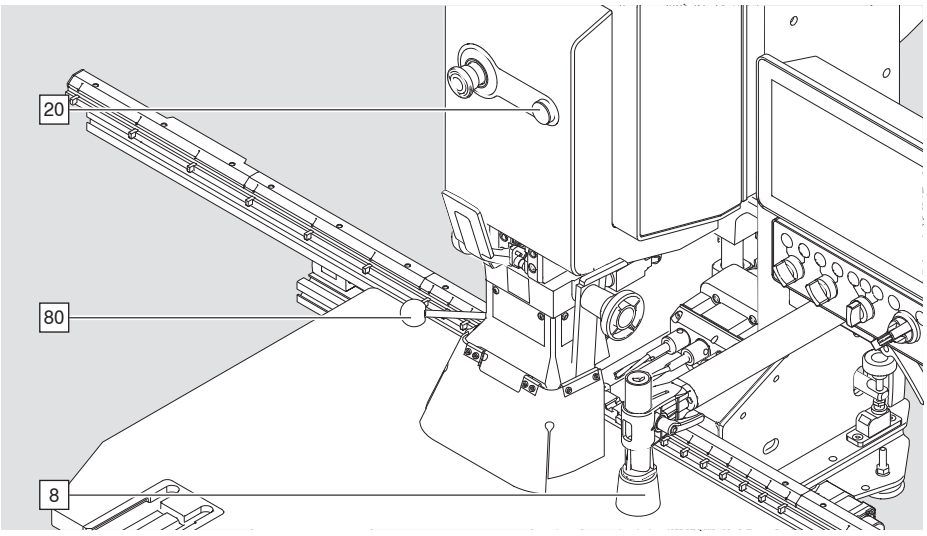

i NOTE

■ The knock-in process is not stopped automatically.

The following requirements must be satisfied in order to trigger the knock-in stroke:
➢ The depth (Y measurement) must be under 100 mm.

➢ Press the start button [20] until the fitting is fully knocked in.
➢ Swivel up the swing arm [80].
The hold down clamps [8] release automatically.

Horizontal drilling*

* The horizontal drilling function is not available with type M70E2000.

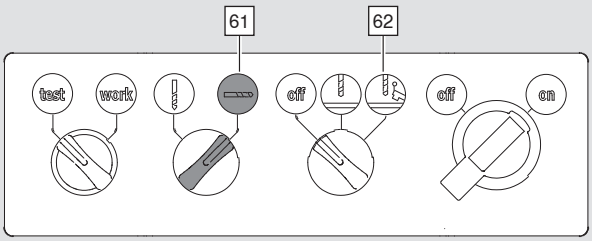

➢ Set the drilling mode selector switch [61] to horizontal drilling.

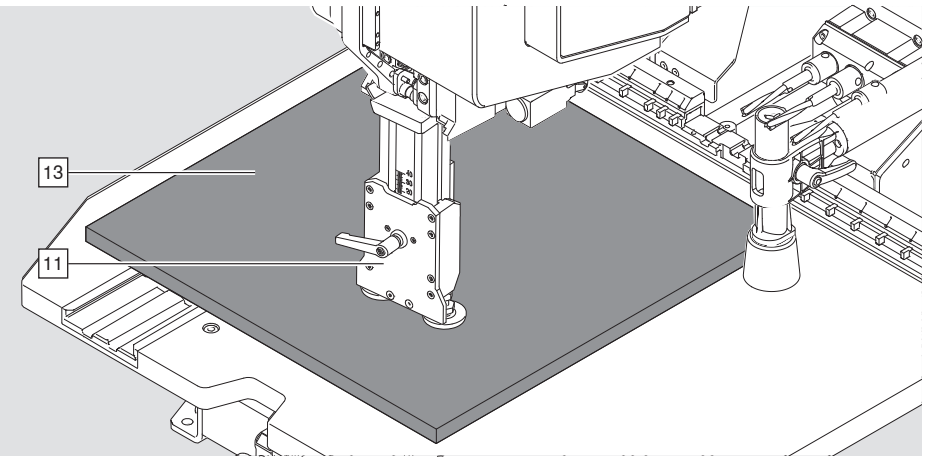

The following requirements must be met so that the drilling process can be initiated:

➢ No drilling head [25] may be clamped.
➢ Attach the horizontal hold down clamp [11].
➢ The emergency stop button [21] must be unlocked.
➢ The depth (Y measurement) may not be over 20 mm.
➢ The EASYSTICK ruler must be moved apart min. 45 mm.

i NOTE

■ It is recommended that, from a drilling depth of 25 mm, chips should be removed due to repeated drilling. This will increase the service life of the drill bits.

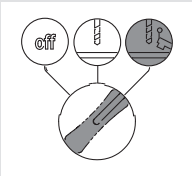

➢ Set the hold down clamp mode selector switch [62] to vertical drilling and knock-in.

WARNING

Serious cuts.
Failure to heed this warning may result in personal injury.

- ➢ Only one person at a time should operate the assembly machine.
- ➢ All items except for the work piece should be removed from the work area [E] of the assembly machine.
- ➢ Keep your hands and other objects away from the work area [E] of the assembly machine.
- ➢ Caution crush danger in the area of the hold down clamp
- ➢ Wear eye protection.
- ➢ Wear ear protection.
- ➢ Wear suitable work clothing.

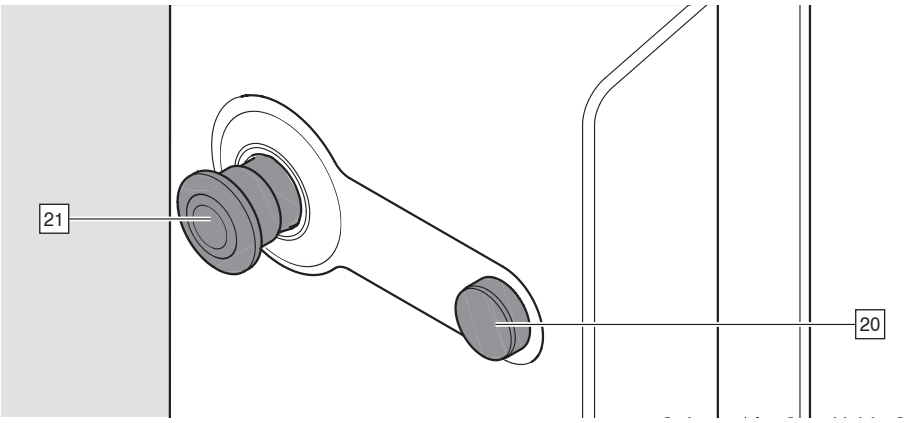

➢ Press the start button [20] until the drilling process is ended automatically.

Remove work piece

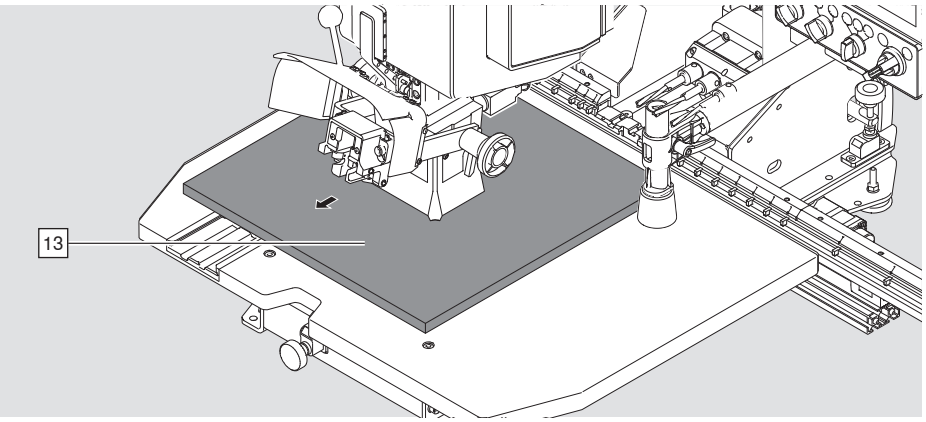

- ➢ Remove the work piece [13].
- ➢ Clean the work table [17], ruler [9] and stops [84].
- ➢ Set the selector switch [60] to TEST after processing the work piece.
- ➢ Set the main switch [63] to the "OFF" position if the machine will not be used for a while or at the end of the working day.

Overview of maintenance points

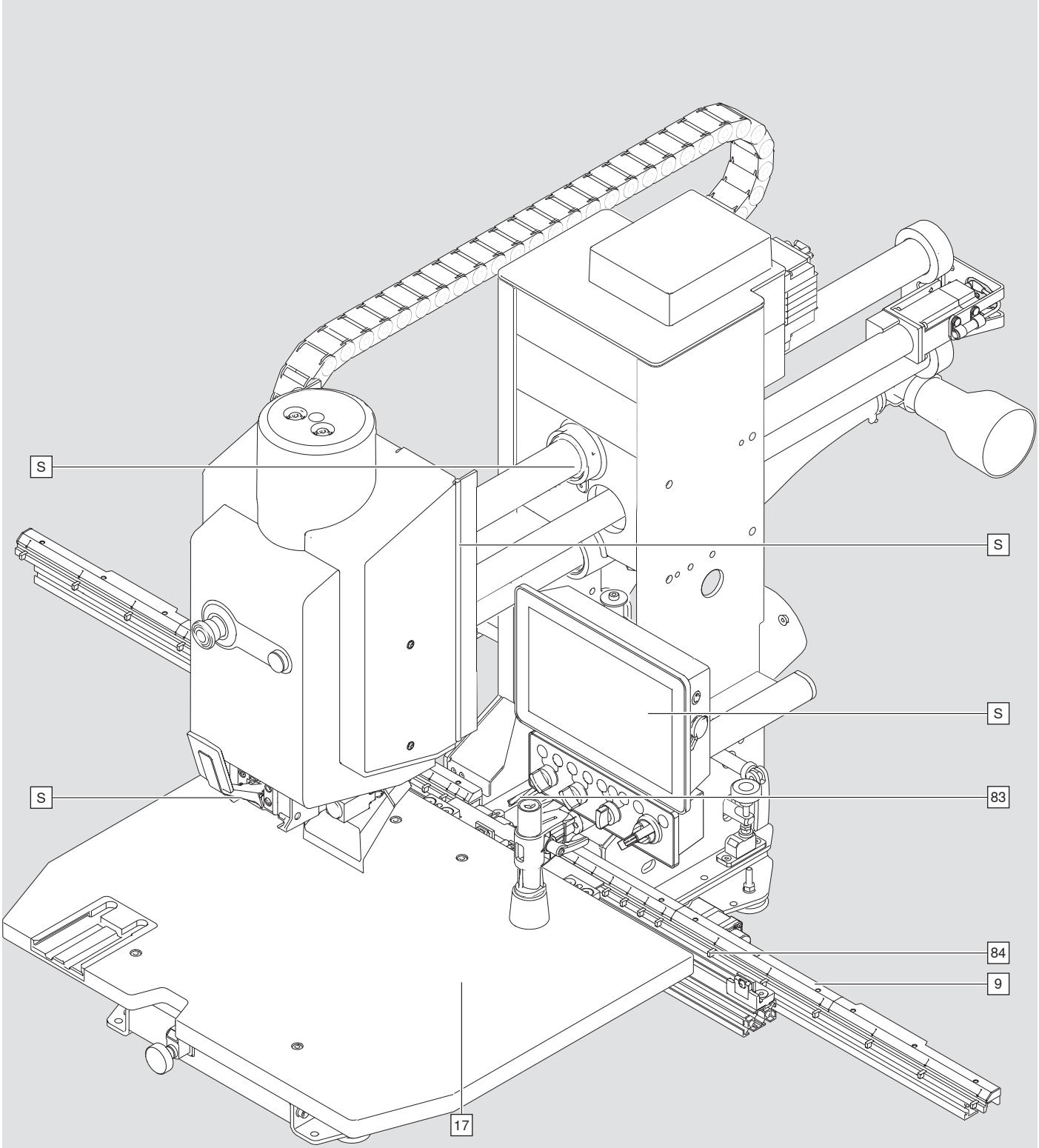

S: perform a visual inspection, clean with a microfibre cloth if necessary.

Maintenance

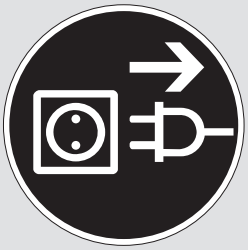

WARNING

Serious cuts.
Failure to heed this warning may result in personal injury.

➢ The assembly machine must be disconnected from the power supply before cleaning and maintenance.
➢ The assembly machine must be disconnected from the pressurised air system before cleaning and maintenance.
➢ No protection equipment or covers may be removed permanently.
➢ Set the main switch to the "OFF" position.

CAUTION

- Wear eye protection during cleaning work.

NOTE

- Replace damaged parts immediately.
  Only use BLUM original parts.
- Do not use oil or lubricants during cleaning.
  All runners and bearings are maintenance-free.
- Dust and wood chips must not be removed using sharp-edged or metallic objects.
- We recommend using microfibre cloths for cleaning work.

NOTE

- Daily maintenance work should be performed before starting work, a shift change or operator change.
- You should read the Safety chapter to ensure safe handling of the assembly machine.

Daily maintenance work

➢ Before starting work, check the pneumatic lines and electrical lines for damage. Damaged lines should only be replaced by authorised personnel.
➢ Perform a visual inspection of the EASYSTICK cabling.
➢ Check the hold down clamp sight glass for damage [8].
➢ Check the protection equipment of the assembly machine and drilling head.
➢ Vacuum the drill dust and wood chips off the assembly machine.
By no means use pressurised air to blow it off.

- ➢ Perform a visual inspection of the guide elements [S]. If necessary, wipe away the dust using a microfibre cloth.
- ➢ Perform a visual inspection of the ruler [9], stops [84], clamps and guides. If necessary, wipe away the dust using a microfibre cloth.
- ➢ Perform a visual inspection of the EASYSTICK computer [3]. If necessary, wipe away the dust using a microfibre cloth.
- ➢ Perform a visual inspection of the horizontal drilling head [5]. If necessary, wipe away the dust using a microfibre cloth.
- ➢ Defective parts may only be replaced by authorised personnel.

Monthly maintenance work

- ➢ Check the air filter unit [31] for water residue, which can collect in the air filter unit and empty if necessary.

Change drill bit

- ➢ Set the main switch to "0FF".
- ➢ Unclamp the drilling head [25].
- ➢ Change the drill bits [24, 83] and note the direction of rotation see chapter "Setup".

Repairs

- ➢ Please contact a Blum partner for repairs. Blum partners worldwide can be found at: www.blum.com/adresses

Error during drilling

Problem	Possible cause	Solution
Drill bit is jammed in the wood.	Drill bits are dull.	➢ Repoint drill bits or replace.
	Incorrectly rotating drill bit inserted.	➢ Install anti-clockwise drill bits into chucks marked in red and clockwise drill bits into chucks marked in black.
	Improper material has been drilled.	➢ Only use work pieces made from wood, particle board or epoxy coated wood.
Lots of smoke when drilling.	Drill bits are dull.	➢ Repoint drill bits or replace.
	Incorrectly rotating drill bit inserted.	➢ Install anti-clockwise drill bits into chucks marked in red and clockwise drill bits into chucks marked in black.
	Drilling depth is too large for horizontal drilling.	➢ Resink several times during drilling.
	Motor rotating in the wrong direction.	➢ Correct the motor rotation. see page 23.

Error in the work piece

Problem	Possible cause	Solution
Drillings are too large, oval or stripped.	Drilling diameter is too large.	➢ Check drill bits.
	Drill bit bent.	➢ Change drill bit.
	Drill bits are dull.	➢ Repoint drill bits or replace.
	Board thickness is set incorrectly. Drill bit drives too fast into the work piece.	➢ Set correct board thickness.

Problem	Possible cause	Solution
Drillings are off-centre or in the wrong position.	Ruler not set properly.	➢ Set ruler to the 0 point.
	Chips between the ruler and the work piece.	➢ Remove dirt and chips.
	Incorrect planning performed on the EASYSTICK computer.	➢ Check planning and redo planning.
	EASYSTICK ruler has run into an obstruction.	➢ Remove obstruction from the EASYSTICK ruler.
	The start button was pressed while EASYSTICK was moving.	➢ Move to the planning value again.
Drilling depth not reached.	Chips in the travel path.	➢ Remove chips from the travel path.
	Length of drill bit is under 57 mm.	➢ Set the drill bit to 57 mm length or change.
	Work piece thickness less than 16 mm.	
	Machine is running into an object.	➢ Remove object.
	A Blum work table is not being used.	➢ Only use original accessories and spare parts.
Error during insertion.	Chips in the drilling.	➢ Remove chips from the drilling.
	The diameter of the drillings is too small.	➢ Check the drilling diameter.
	Drillings are not deep enough.	➢ Set the drill bit to 57 mm length or change. ➢ Residue material thickness is set incorrectly.
	The surface of the work piece is too hard.	➢ Bevel drilling.
	Insertion ram is running into an object.	➢ Remove object.
	Air pressure is too low.	➢ Set air pressure.

Error in the work piece

Problem	Possible cause	Solution
Error during insertion.	Work piece is offset.	➢ Use hold down clamp.
	Insertion ram is offset.	➢ Set insertion ram.
Work piece is scratched.	Work table is dirty or damaged.	➢ Clean work table. ➢ Check the work table for damage.
	Ruler and stops are dirty.	➢ Clean ruler and stops.

Assembly machine malfunctions

Problem	Possible cause	Solution
Motor does not run.	Assembly machine is not connected to the power supply.	➢ Connect the assembly machine to the power supply.
	Power supply fuse has failed.	➢ Reset fuse or replace.
	Work mode selector switch is set to set-up.	➢ Set the work mode selector switch to operation.
	Motor overheated, Start button flashes quickly three times, 1 pause cycle	➢ Allow the motor to cool down.
	Assembly machine connected to incorrect voltage.	➢ Check mains voltage and compare with motor data. Have this checked by an authorised electrician.
	Motor is defective.	➢ Have motor replaced by an authorised electrician.
Motors overheating.	Assembly machine connected to incorrect voltage level.	➢ Check mains voltage and compare with motor data. Have this checked by an authorised electrician.

Problem	Possible cause	Solution
Motors overheating.	Drilling in hard wood with too high a speed.	➢ Set correct board thickness.
	Motor is dusty.	➢ Clean the assembly machine.
	Drilling head runs with difficulty.	➢ Send the drilling head to a Blum repair centre.
Clamps do not function.	Incorrect setting of the hold down clamp operating mode selector switch.	➢ Change selector switch setting.
	No pressurised air or too little pressure.	➢ Open the compressed air shut-off valve. ➢ Check the pressure.
No stroke movement when pressing the start button.	No pressurised air or too little pressure.	➢ Open the compressed air shut-off valve. ➢ Check the pressure.
	Start button is flashing.	➢ See start button "Troubleshooting"
Stroke movement goes down but not back up.	Too little pressure.	➢ Check the setting on the air pressure regulator.
	Pneumatic hose kinked or damaged.	➢ Check the air lines.
Air filter connection is leaking.	Air hose is leaking.	➢ Replace air hose.
	Air filter unit is leaking.	➢ Replace air filter unit.
Chip removal is inadequate.	Chip blow-off is too weak.	➢ Check air pressure.
	Chip exhaust is not set.	➢ Turn on chip exhaust.
Drill bits cannot be gripped in the chuck.	Chuck heavily soiled.	➢ Clean chuck.
	Drill shaft diameter too large or deformed.	➢ Change drill bit.
	Drill clamping screw not screwed out until the stop.	➢ Unscrew drill clamping screw.
Drill bits not rotating.	Drilling head coupling is damaged.	➢ Change coupling.

Assembly machine malfunctions

Problem	Possible cause	Solution
Horizontal drilling not possible.	Work selector switch - setup is at the incorrect setting.	➢ Change setting.
	Drilling mode selector switch at the incorrect setting	➢ Change setting.
	Horizontal hold down clamp is not engaged.	➢ Engage horizontal hold down clamp.
	Incorrect ruler being used.	➢ Use a ruler for PRO-CENTER.
	EASYSTICK ruler has not moved apart.	➢ Move the EASYSTICK ruler apart.
Start button flashes rapidly.	Emergency stop button is pressed.	➢ Unlock the emergency stop button.
Start button flashes twice, 1 pause cycle.	Time relay faulty.	➢ Contact customer service.
Start button flashes three times, 1 pause cycle.	Motor has overheated	➢ Leave motor to cool down.
Start button flashes slowly.	Horizontal drilling mode has been selected. Y position is more than 70 mm.	➢ Move the Y value to less than 70 mm.
	Horizontal drilling mode has been selected. Horizontal hold down clamp is not engaged.	➢ Engage horizontal hold down clamp.
	Horizontal drilling mode has been selected. Incorrect ruler has been attached.	➢ Clamp in horizontal ruler.
	EASYSTICK ruler is not moved wide enough apart.	➢ Move the EASYSTICK ruler apart.

Simplified EU declaration of conformity for MINIPRESS top

Simplified EU declaration of conformity
Julius Blum GmbH hereby declares that all electrical and electronic article types of Julius Blum GmbH conform to the Directives 2009/125/EC and 2011/65/EU.

Julius Blum GmbH hereby declares that the electrical and electronic article types M70.2000, M70E2000, M75.2000, M75E2000 conform to the Directives 2006/42/EC and 2014/30/EU.

The complete text of the EU declaration of conformity is available at the following Internet address:
www.blum.com/compliance

Technical data MINIPRESS top

Only use in dry, enclosed rooms.

Ambient atmosphere:

Transport/storage: -20 to 85 °C
Operation: 5 to 35 °C
Relative humidity (operation) 5 - 93 % non-condensing

Dimensions / weight:

Height: 976 mm
Width: 1100 mm
Depth: 1085 mm
Weight: See rating plate

Installation distance to wall min. 450 mm

Electrical energy: M75E2000

Voltage: 3/N/PE AC 400 V 50/60 Hz
Power: 1,1 kW / 2.75 A
Electrical diagram: ES-002/0ML M75E2000

Electrical energy: M70E2000

Voltage: 3x 400 V 50 - 60 Hz + N + PE
Power: 1,1 kW

Electrical energy: M75E2000*US

Voltage: 1PH/PE 240V 60 Hz
Power: 1,1 kW / 7.9 A
Electrical diagram: ES-001/0ML M75E2000

Pneumatic energy:

Pressure: 5 - 7 bar / 73 - 101 psi / 0,5 - 0,7 MPa
Air consumption per cycle (stroke) : 1.5 litre

Sound:

Emission - sound pressure level (LAequ): 76 dB(A)
Sound power level tolerance measurement uncertainty: +/- 4 dB(A)

Work piece:

Materials: wood
Work piece thickness horizontal drilling: 12 - 40 mm
Work piece thickness vertical drilling: 8 - 45 mm

Rating plate:

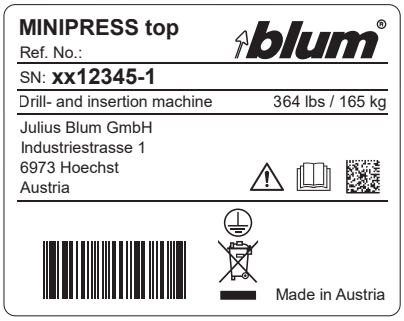

Illustration

Device type: drilling and insertion machine

Disposal of electrical assembly devices

Electrical assembly devices must not be disposed of with household waste at the end of their service life. Ask your local authority for information on how to proceed. BLUM electrical assembly devices meet the requirements of the WEEE Directive 2012/19/EU.

Electrical and electronic appliances are collected separately, which enables old appliances to be reused or recycled, and their materials to be reused. This is intended to prevent any hazardous materials that may be contained in the appliances from damaging the environment and health during disposal.

Electric assembly devices can be returned to the manufacturer at the end of their service life or can be recycled or repaired if this makes ecological sense.
Further information on this under the following link:
www.blum.com/recycling

Energy storage:

The assembly machine does not have an electrical and pneumatic energy storage system.

Blum partners worldwide can be found at:
www.blum.com/addresses

Look for our FSC™-certified products

FSC
www.fsc.org
FSC™ C115115

BAU0128818464 · INX: 09 · IDNR: 130.956.5 · · BA-193/0EN MINIPRESS top · 09.25 · © Copyright by Blum

Julius Blum GmbH
Furniture Fittings Mfg.
6973 Höchst, Austria
Tel.: +43 5578 705-0
Fax: +43 5578 705-44
E-mail: info@blum.com
www.blum.com

Our sites in Austria, Poland and China are certified to the international standards mentioned below.
Our site in the USA is certified to ISO 9001.
Our site in Brazil is certified to ISO 9001 and ISO 14001.

ISO 9001 Certified Quality System
ISO 14001 Certified Environmental System
ISO 50001 Certified Energy System