MERIVOBOX
Let’s create

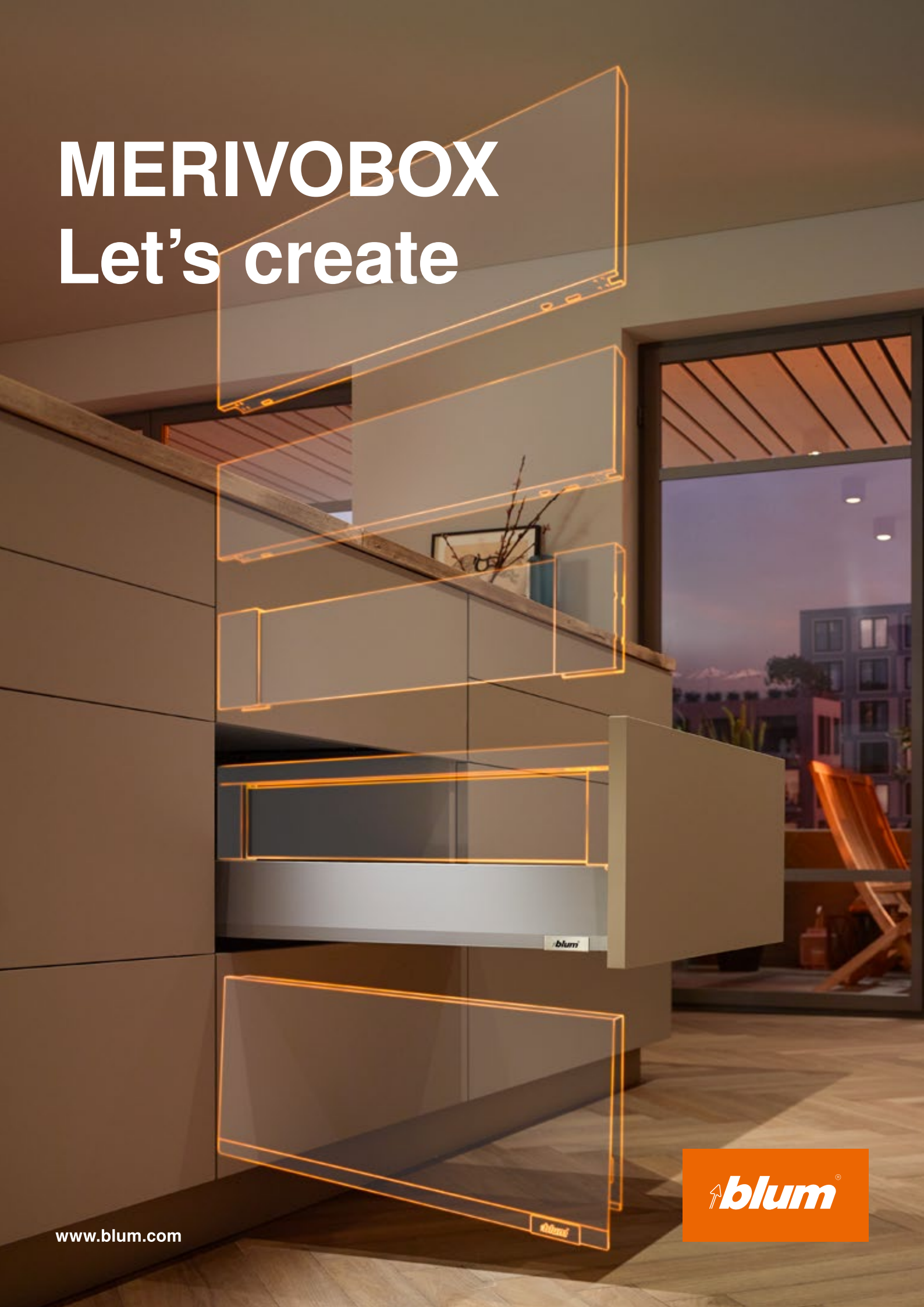

www.blum.com

Launching a new box system is hard work and requires extensive research and development. But that is not all. We have had to rethink all our processes, expand our plants, make space for new and specially developed production facilities, manufacture the right tools and coordinate everything down to the last detail, including packaging and logistics. However, it also requires a huge effort from our customers and partners. It means changing manufacturing processes, adapting assembly and even training employees.

We are aware of all this. But we are convinced that MERIVOBOX is worth the effort. Our latest box system provides a unique combination of a slim drawer side design, high stability and easy assembly. It allows you to create a broad range of drawers with just a few components – and all with the same easy assembly process. The L-shape of the cabinet profile is coupled with maximum functionality, which is what makes the uniform box platform so innovative. Assembly is always the same, adjustment is simple and MERIVOBOX boasts award winning design.

MERIVOBOX.
Offering variety has never been so easy.

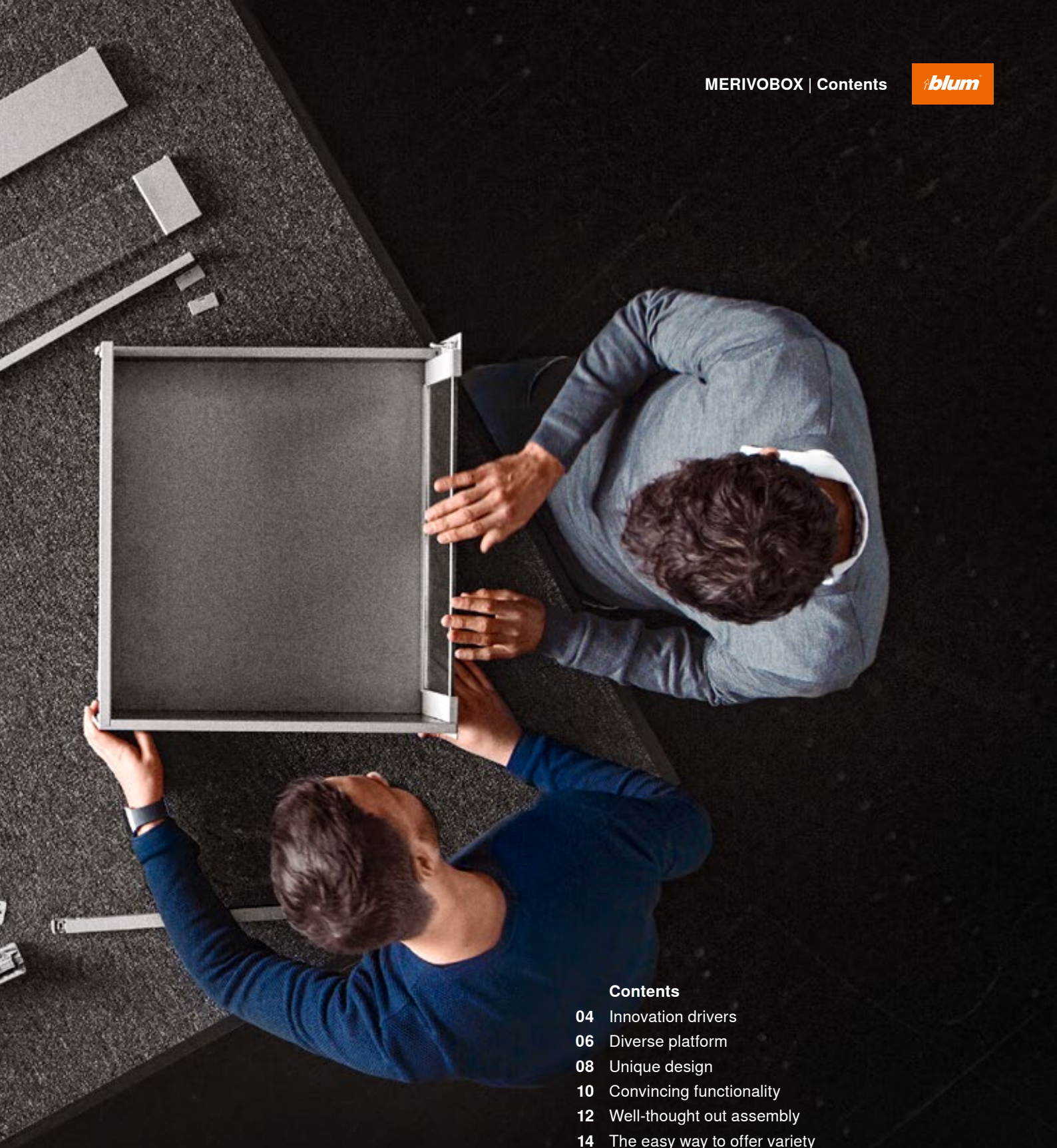

Contents

04 Innovation drivers
06 Diverse platform
08 Unique design
10 Convincing functionality
12 Well-thought out assembly
14 The easy way to offer variety
16 Colour concept
18 MERIVOBOX in the kitchen
20 MERIVOBOX throughout the home
28 Cabinet solutions
30 AMBIA-LINE
32 Motion technologies
34 Services
36 Assembly devices
38 moving ideas

Innovation drivers

MERIVOBOX brings together four innovations: a platform for simplified manufacturing, a minimalist design for a unique look, a new cabinet profile for enhanced functionality and a well-thought-out assembly concept for easy implementation.

Platform
It takes just a few components to create your own extensive range. And you can make furniture manufacturing even more efficient at the same time. Diverse and yet simple.

Design
MERIVOBOX boasts straight lines and a striking look. Create your own diverse and unmistakable range of furniture!
Modern minimalism meets distinctive design.

Functionality
MERIVOBOX will inspire your customers for the lifetime of the furniture. The newly developed cabinet profile concept delivers extremely smooth running action and high load bearing capacity coupled with a feather-light glide and enhanced stability.

Assembly
A well-thought-out concept. No matter which model you opt for, assembly is always simple and adjustment always the same. It is extremely easy to achieve precise results.

Detailed information on the awards can be found at:
www.blum.com/award

Watch the MERIVOBOX video
www.blum.com/mvx-image

GERMAN INNOVATION AWARD '20 WINNER

GERMAN DESIGN AWARD WINNER 2020

iF DESIGN AWARD 2020

interzum Award
High product quality

reddot winner 2021

One drawer side – countless possibilities
Drawer sides form the frame of the drawer. The integrated platform interface makes it easy to add a variety of components: MERIVOBOX modular with a gallery, with BOXCOVER or a closed metal side with BOXCAP. It is therefore extremely easy to create differentiation for your customers.

One front for all
The same drilling position and front fixing bracket for your entire MERIVOBOX range. One front for all drawer options and one for all high fronted pull-out options. This presents a compelling argument for faster assembly.

Simplify your processes with a diverse platform

Our completely new MERIVOBOX box system gives you simple manufacturing AND great variety, making it easier for you to meet the needs of your customers.

Cabinet profile as the basis of the platform

You can use the same fixing position (height and depth) for all applications – be it with BLUMOTION, SERVO-DRIVE or TIP-ON BLUMOTION, with side stabilisers or for inner drawers. Simply drill into the cabinet in the same way every time and then decide which solution you wish to install.

Smooth transitions
Smooth transitions are a key feature of the well-thought-out design – for virtually seamless pull-outs.

Exposed metal parts
Metal components and a coordinated colour scheme create a top quality look without any nylon components – even for the version with a gallery.

Distinctive drawer side design
The slim drawer side has a distinctive design line that creates exciting light reflections.

Branding element
Add your own branding to the drawer side – simply slide on the branding element for consistent positioning. Or not. Drawer sides have a sleek look even without a branding element.

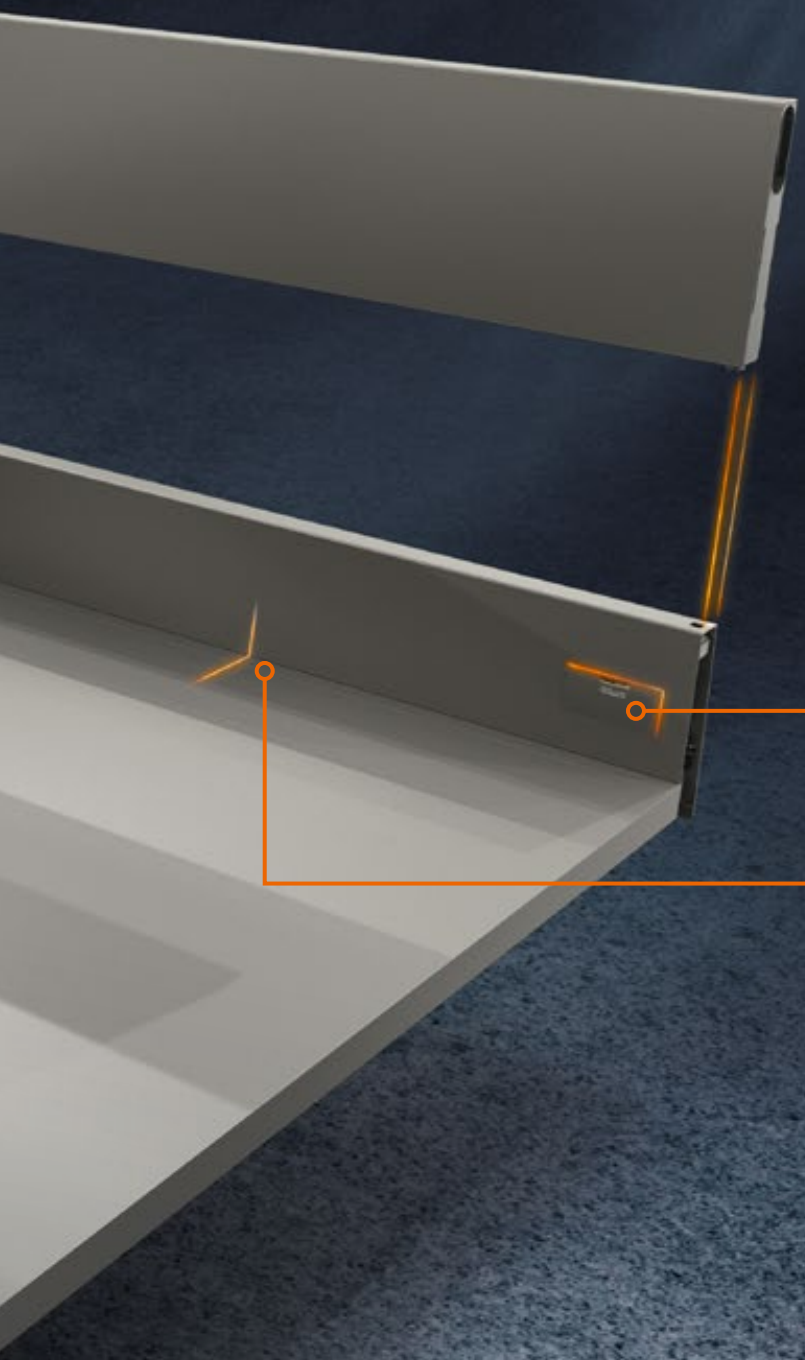

Flush cover cap
The clear cut design on the inside is rounded off by a flush cover cap. AMBIA-LINE beautifully organises interiors even with cover caps in place.

Straight on the inside
This enables you to use storage space right up to the edge. Combine with AMBIA-LINE to create stunning interiors and maximise the storage available.

Opt for a unique design

Pull-out stop
The integrated pull-out stop guarantees that the cabinet profile and drawer are connected securely. Accidental removal is impossible.

High front stability
The front attachment is extremely stable for both drawers and high fronted pull-outs. No additional stabiliser is needed even when implementing high cabinet fronts.

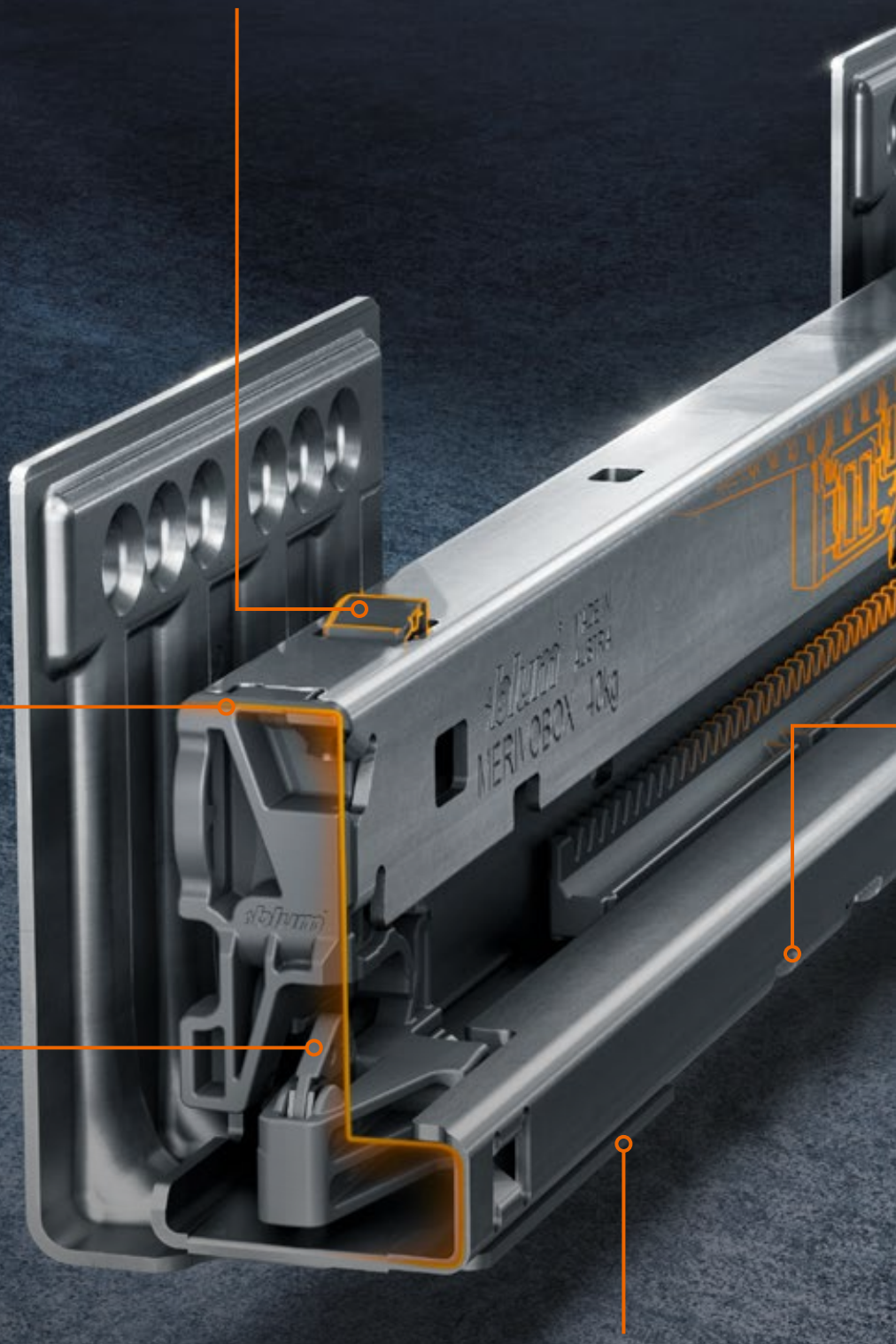

Vertical stability and full load bearing capacity
The box system is exceptionally stable thanks to the unique L-shape of the cabinet profile. What is more, it has a high dynamic carrying capacity of 40 or 70 kg.

Stable front position
No matter whether empty or fully laden. Once adjusted, the gap layout will remain aligned to create a harmonious look.

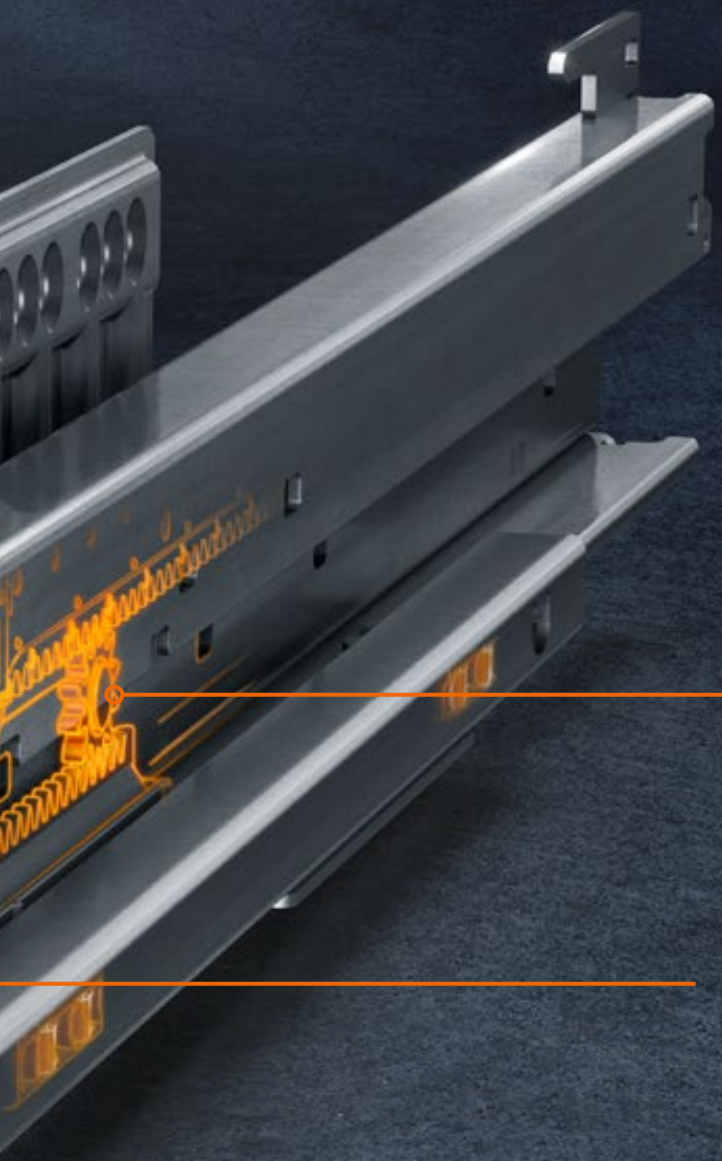

Synchronised feather-light glide
Thanks to full synchronisation, pull-outs open with ultimate ease. The new box system is characterised by a smooth opening and closing action that will convince kitchen buyers.

Interface for optional components
Equip MERIVOBOX with motion technologies and side stabilisers to suit your needs – also possible at a later stage of the manufacturing process.

Benefit from convincing functionality

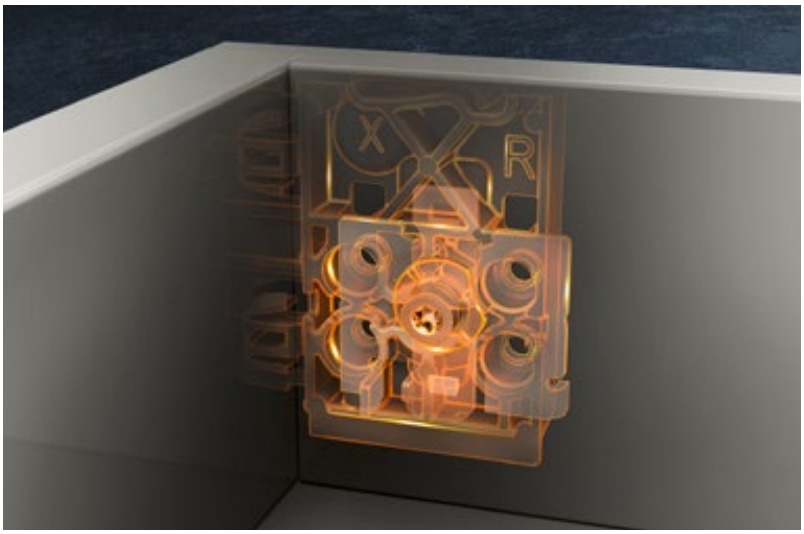

Tilt adjustment

You can adjust the front connector plate in just a few simple steps – no matter which drawer side height you use.

Fast, reliable assembly and removal of fronts

You can easily insert the front thanks to the holding position, even when a pull-out is already in place. Very wide fronts can also be easily removed, even by a single person.

Use our EASY ASSEMBLY app to find answers to any questions you may have about assembly and adjustment.
www.blum.com/eaapp

Watch the MERIVOBOX video
www.blum.com/mvx-installation

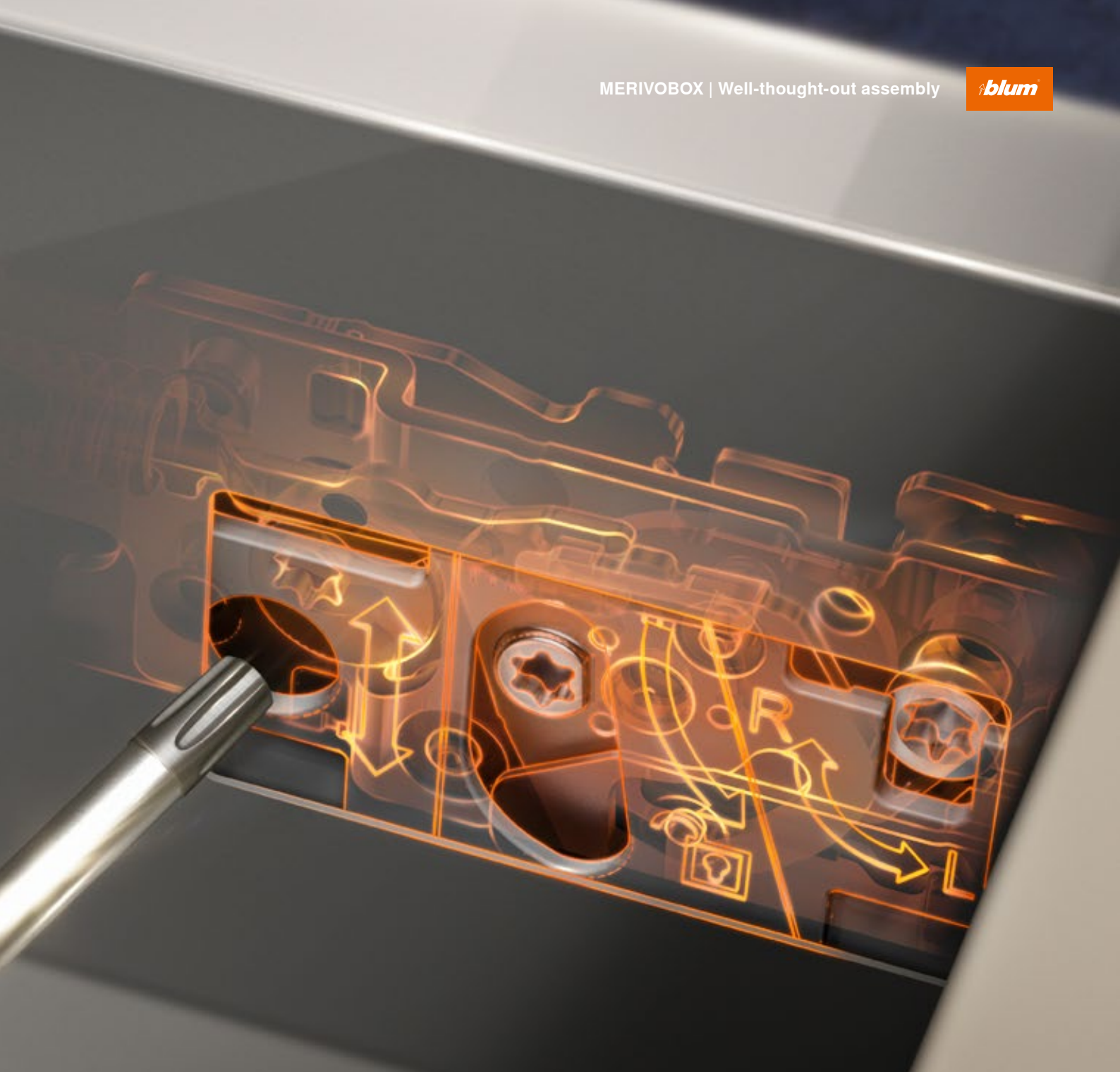

Improve your efficiency with well-thought-out assembly

Every MERIVOBOX option can be implemented quickly and easily thanks to the consistent platform concept. The box system has simple, clearly labelled and easily accessible 3-dimensional adjustment options for side, height and tilt adjustment, which are the same for every drawer side.

Drawer M
Drawer side height M is a true all-rounder – as a drawer, but also as a base for all high fronted pull-out options.

Fittings selection made easy with the online Product Configurator at www.blum.com/configurator

The easy way to offer variety

MERIVOBOX is based on a platform concept so you can create a broad range of drawers and pull-outs with just a few components – and all with the same easy assembly process. This simplifies production processes and increases efficiency.

MERIVOBOX modular with gallery
Create a clean cut design with the use of exposed metal components.

MERIVOBOX modular with BOXCOVER
Create unique pull-outs – with large design elements.

MERIVOBOX modular with BOXCAP
Simply clip on BOXCAP and you have a metal pull-out with closed sides.

MERIVOBOX modular with gallery in indium grey matt

The choice is yours: our coordinated colour concept

MERIVOBOX modular with BOXCAP in orion grey matt

MERIVOBOX modular with BOXCOVER in silk white matt

MERIVOBOX modular with BOXCOVER
Glass design elements capture the light and create a classy impression.

MERIVOBOX in the kitchen

Its impressive functions make MERIVOBOX ideal for the kitchen. Regardless of what's cooking, our latest box system ensures that kitchen users have clear visibility and ergonomic access to all storage items. Choose the right model to suit the application and your preferences. MERIVOBOX is a reliable partner – and not just for cooking. For the lifetime of the furniture.

MERIVOBOX modular with gallery
The high fronted pull-out option with a gallery is a real eye-catcher and a top quality, entry-level solution.

MERIVOBOX modular with BOXCAP
Experts consistently opt for metal: it accentuates the clear cut design.

MERIVOBOX throughout the home

A box system that proves its worth in the kitchen is also ideally suited to other living areas. The top quality look of MERIVOBOX blends seamlessly into any home.

In the study
Equip your home office with MERIVOBOX and make working from home a cinch. Pens, pads and folders are exactly where they should be and immediately to hand.

In the living room

Bring variety to pull-outs: combine MERIVOBOX with BOXCOVER to highlight your personal style in the living room. Use design elements to create daring contrasts and amazing harmonies.

In the bathroom

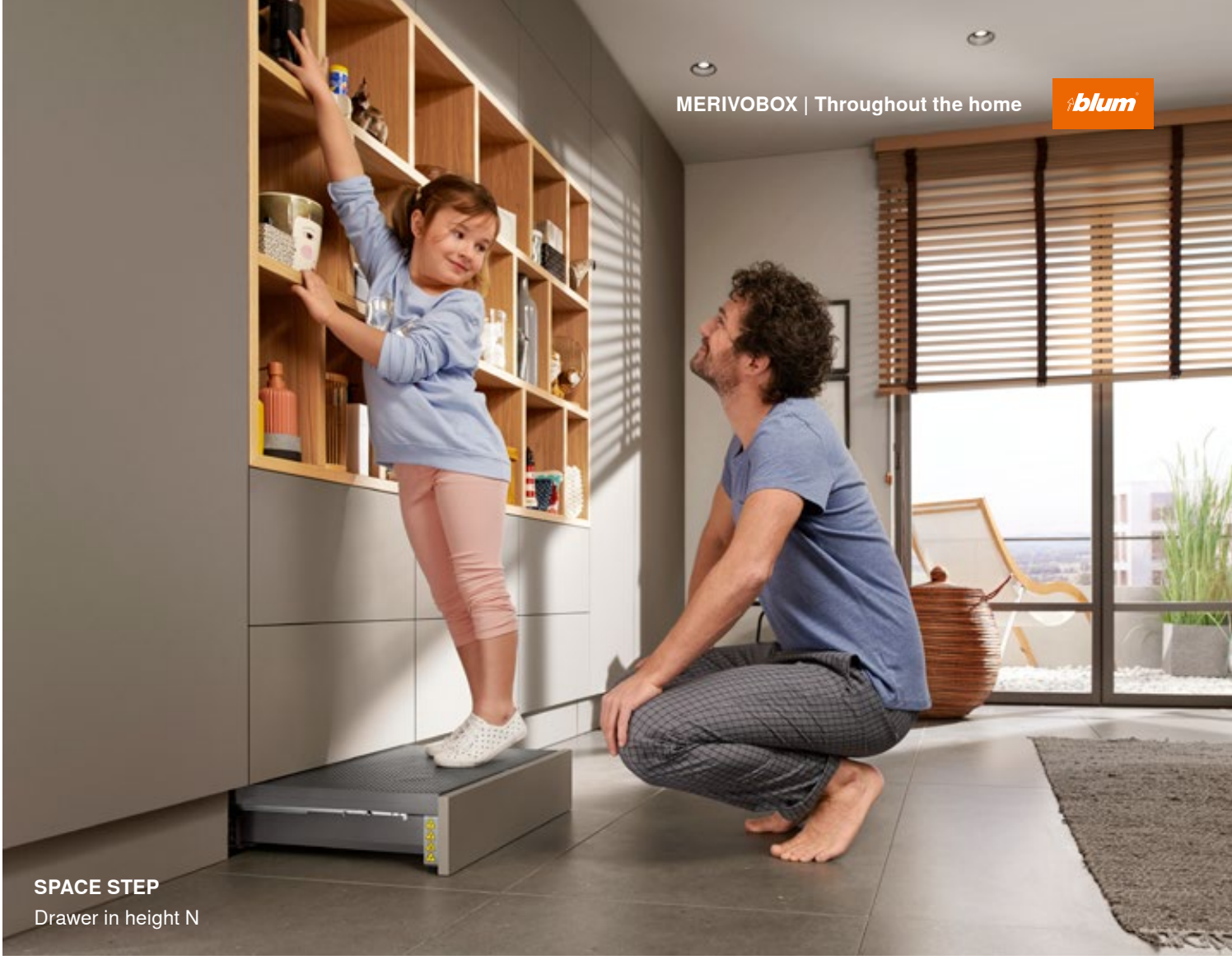

SPACE STEP
Drawer in height N

SPACE TOWER
MERIVOBOX modular with gallery as inner pull-out

Regardless of the application, MERIVOBOX looks just as good in the bathroom. Be it in the form of the SPACE TOWER, SPACE STEP or a conventional washstand, maximise the existing space and make day-to-day life easier. A stunning design enables you to meet customer requirements – no matter which version you opt for.

In the bedroom

Either as a bedside cabinet or vanity unit, MERIVOBOX is practical for day-to-day use – and a plus for real bookworms and little beauty queens alike.

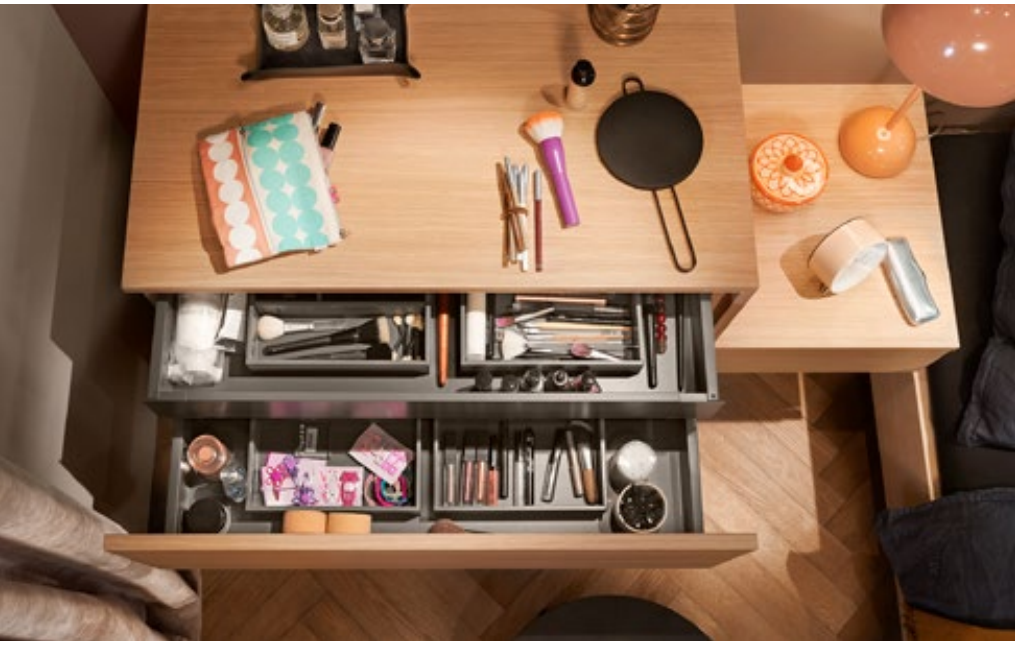

blum

In the dressing room

Find the right spot for every item of clothing and always maintain an overview.
Be it for a weekend trip or the next holiday, your suitcase will be packed in no time.

Register for Blum E-SERVICES
and gain access to the Cabinet Configurator:
www.blum.com/cabinetconfig

MERIVOBOX impresses even when heavily laden: sophisticated solutions such as the SPACE TOWER larder unit create valuable storage space. It comes in all heights and widths and provides all-round access.

Cabinet solutions

Furniture and fittings have to withstand the rigours of everyday use. Blum has been investigating the requirements of users for years. Thanks to our research, we are constantly coming up with new ideas for making modern living environments even more functional.

SPACE TWIN
Diagonally offset cabinet profiles allow you to turn tiny gaps into valuable storage space.

SPACE STEP
The clever plinth solution creates additional storage space and gives users easy access to higher storage levels.

AMBIA-LINE – organisation at its best

The elegant frames of the AMBIA-LINE inner dividing system complement MERIVOBOX perfectly.

Cutlery insert and drawer frame
Everything where it should be, from forks to wooden spoons. AMBIA-LINE gives you clear visibility of all contents.

Drawer frame
Be it beauty accessories or odds and ends, everything is always tidy and to hand thanks to the inner dividing system.

Frame for high fronted pull-outs
If you love to keep things neat and tidy, you can't go wrong with AMBIA-LINE for organising the entire wardrobe – regardless of the folding technique that you use.

Everything nice and tidy
Cross galleries and lateral dividers can be positioned flexibly so you can adapt MERIVOBOX to suit storage items.

100,000

opening and closing cycles

Blum fittings are designed to impress you on a daily basis with their functionality and durability. They have been put through as many as 100,000 opening and closing cycles. As a result, our pull-outs are a pleasure to use for the lifetime of the furniture.

Find out more about all four motion technologies by Blum at: www.blum.com/4formore

Motion technologies for MERIVOBOX

BLUMOTION
by Blum

Mechanical soft close
Soft and effortless closing for all your furniture – no matter how heavy the pull-out, door or wall cabinet front.

SERVO-DRIVE
by Blum

Electrical opening and soft close
Wall cabinets and pull-outs open at a single touch. Soft and effortless closing thanks to the integrated BLUMOTION soft-close mechanism.

TIP-ON BLUMOTION
by Blum

Mechanical opening
Pull-outs open at a single touch, giving users easy access to the opening edge of fronts. They close softly and effortlessly with an energetic push thanks to integrated BLUMOTION.

Blum services

Your key to greater efficiency

What's the key to successfully implementing your projects? One factor is our high-quality products, and the other is the services we provide for them. They're precisely tailored to your needs along every step of your process chain, allowing you to work more efficiently and therefore save time.

Personal services
Direct contact for customer-focused support

Digital services
Digital support for greater efficiency

Logistics services
Optimised processes for fast delivery

Assembly devices
Practical tools for precise work

Communication services
Comprehensive material for targeted marketing

Find the right services to suit your requirements:

www.blum.com/services538

From ideas to results, step by step

BOXFIX E-M

Marking template for MERIVOBOX

Templates and jigs

Tried and tested in everyday situations, our templates facilitate the assembly of MERIVOBOX. They are a perfect combination of high precision and practical value which is greatly appreciated both in workshops and directly on site.

MINIPRESS top combined with EASYSTICK is your ultimate manufacturing package for all drilling operations on cabinets and fronts. The new machine generation allows you to carry out all vertical and horizontal drilling operations. Combined with EASYSTICK, precise drilling positions are calculated for you, and the ruler and vertical drilling unit automatically move to the right position. The Blum Cabinet Configurator makes it easy to plan the MERIVOBOX box system. Transfer your planning data to EASYSTICK using a USB stick. EASYSTICK then moves into the exact positions and displays the drillings step by step. Every drilling operation is precise, ensuring that fittings can be inserted with ease.

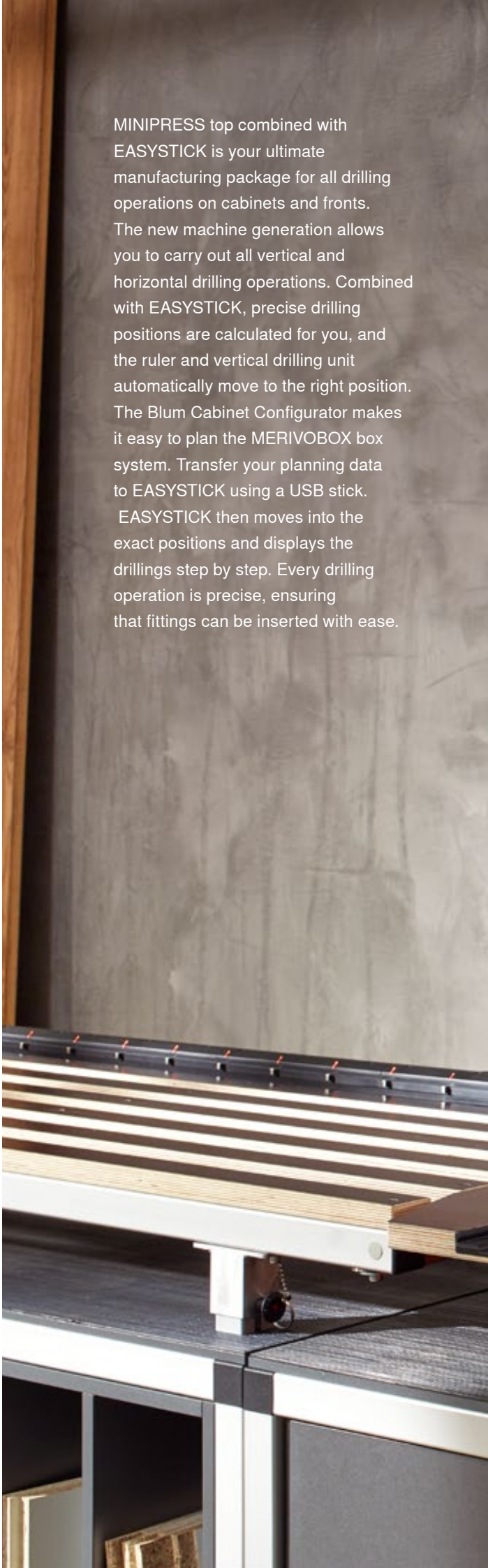

blum
MINIPRESS top
test
work
off
on

moving ideas

We believe that ideas can move the world. We offer innovative fittings, inspiring furniture concepts and appropriate services so that you can turn your creative ideas into reality. We are driven by your needs, international trends and our shared vision of a better quality of living. Let us work together to create moving ideas.

Quality of living

We would like you to enjoy greater convenience and functionality when using furniture.

Product range

Everything from a single source: our wide range of products allows you to keep up with today's and tomorrow's trends.

Inspiration

We monitor global trends and strive to create the solutions of tomorrow. We like to share our insights with you.

Innovation

We stay in motion. Curiosity and pioneering spirit drive us to develop new products and services for you.

Services

We support your daily operations with customised services tailored to your processes.

Quality

We continuously strive to improve our products, services and ourselves.

Trust

We take responsibility for partnerships, our employees, society and the environment.

Julius Blum started our journey in 1952 with horseshoe studs. Today we supply innovative fittings to customers in over 120 countries.

Look for our FSC™-certified products

FSC
www.fsc.org
FSC™ C115115

All content is copyrighted by Blum.
Subject to technical modifications and changes to the range without notice.
IDNR: 785.283.6 · EP-538/2 EN-IL/12.24

Bluran
Import & Distribution Ltd.
2nd, Ha‘Mada St.
P.O.B 5235
Ind. Zone Me‘uyan Soreq
Rishon Le Zion 7515102, Israel
Tel.: +972 732 310360
Fax: +972 732 310361
E-mail: bluran@bluran.co.il
www.bluran.co.il

Julius Blum GmbH
6973 Höchst, Austria
Tel.: +43 5578 705-0
Fax: +43 5578 705-44
E-mail: info@blum.com
www.blum.com

Our sites in Austria, Poland and China are certified to the international standards mentioned below.
Our site in the USA is certified to ISO 9001.
Our site in Brazil is certified to ISO 9001, ISO 14001 and ISO 45001.

ISO 9001 Certified Quality System
ISO 14001 Certified Environmental System
ISO 50001 Certified Energy System

blum®