# SPACE STEP

## Taking storage to new levels

www.blum.com

# Practical combination of step and plinth pull-out

The plinth solution under base units opens up undreamt-of possibilities. SPACE STEP brings multi-functionality to a space that is frequently left unused. It has benefits for everyone: SPACE STEP also makes a great seat for children when putting on shoes.

**Contents**


**04** Nice and practical

**06** Nice and high

**08** Nice and gentle

**10** Nice and safe

**12** Nice and convenient

**14** Ordering information

**16** Planning

**23** Assembly

**28** Removal

**30** moving ideas

# Nice and practical

You need the right furniture concepts for customers who want to store lots of things. SPACE STEP not only allows you to use higher cabinets, but also creates extra storage space in the toekick of base units. Two solutions rolled into one.

## New storage

SPACE STEP gives you a step platform and pull-out under the step (provided the plinth is at least 150 mm high). Of course, the higher the plinth (max. 250 mm), the bigger the storage space. Ideal for seldom used items.

## Versatility in application

You have three different plinth options to choose from. In other words, SPACE STEP is suitable for applications throughout the home.

Recessed plinth

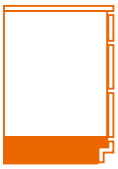

Recessed low plinth

Flush plinth

# Nice and high

The trend towards smaller living areas presents kitchen planners with new challenges. The new SPACE STEP plinth solution allows you to use the space right up to the ceiling and gives your customers easy access to the next higher storage level.

**Inspiring range**

AVENTOS, our inspiring range of lift systems, provides easy access to items in wall cabinets. Users still have full freedom of movement even when cabinet fronts are open.

**Systematic design**

Upgrade the SPACE TOWER larder unit with the two-fold benefits of SPACE STEP. First, create extra storage space under the step. Second, provide easy access to storage items on the top shelf.

# Nice and gentle

Every kitchen designer would like to combine beautiful design with functionality and convenience. Thanks to motion technologies by Blum, SPACE STEP opens and closes softly and effortlessly.

Each of our four motion technologies can be used individually and each has its own special strengths.

www.blum.com/4formore

BLUMOTION by Blum

TIP-ON BLUMOTION by Blum

TIP-ON by Blum

## Functional convenience

SPACE STEP can be implemented with all box and runner systems. To give your customers enhanced convenience, combine the plinth solution with tried and tested motion technologies by Blum.

SERVO-DRIVE by Blum

## Fascinatingly simple

The SERVO-DRIVE electrical motion support system delivers supreme ease of use. SPACE STEP opens at a single touch anywhere on the front. And closes again softly and effortlessly with BLUMOTION.

**New bathroom designs**

Wide or narrow, high or low, colour-coordinated or not – introduce accents and personality with SPACE STEP.

# Nice and safe

Surprise your customers with new ideas and applications! SPACE STEP was designed with safety in mind. The plinth solution provides a sturdy platform that is firmly held in place by a special anti-slip system.

## Anti-slip system

Activated by a weight of just 8 kg, the anti-slip system securely locks the SPACE STEP in position when extended. The step surface can take a maximum load of 150 kg, provided the construction is suitable.

# Nice and convenient

Customers like their furniture planners to think ahead for them. SPACE STEP provides your customers with enhanced convenience before they need it. Now that's attentive service.

### Universal in application

For kitchens, bathrooms, living rooms and other living areas – SPACE STEP improves quality of living throughout the home. The plinth solution also has diverse applications in the commercial sector.

Find out more about SPACE STEP here:
www.blum.com/spacestep

## Ordering information

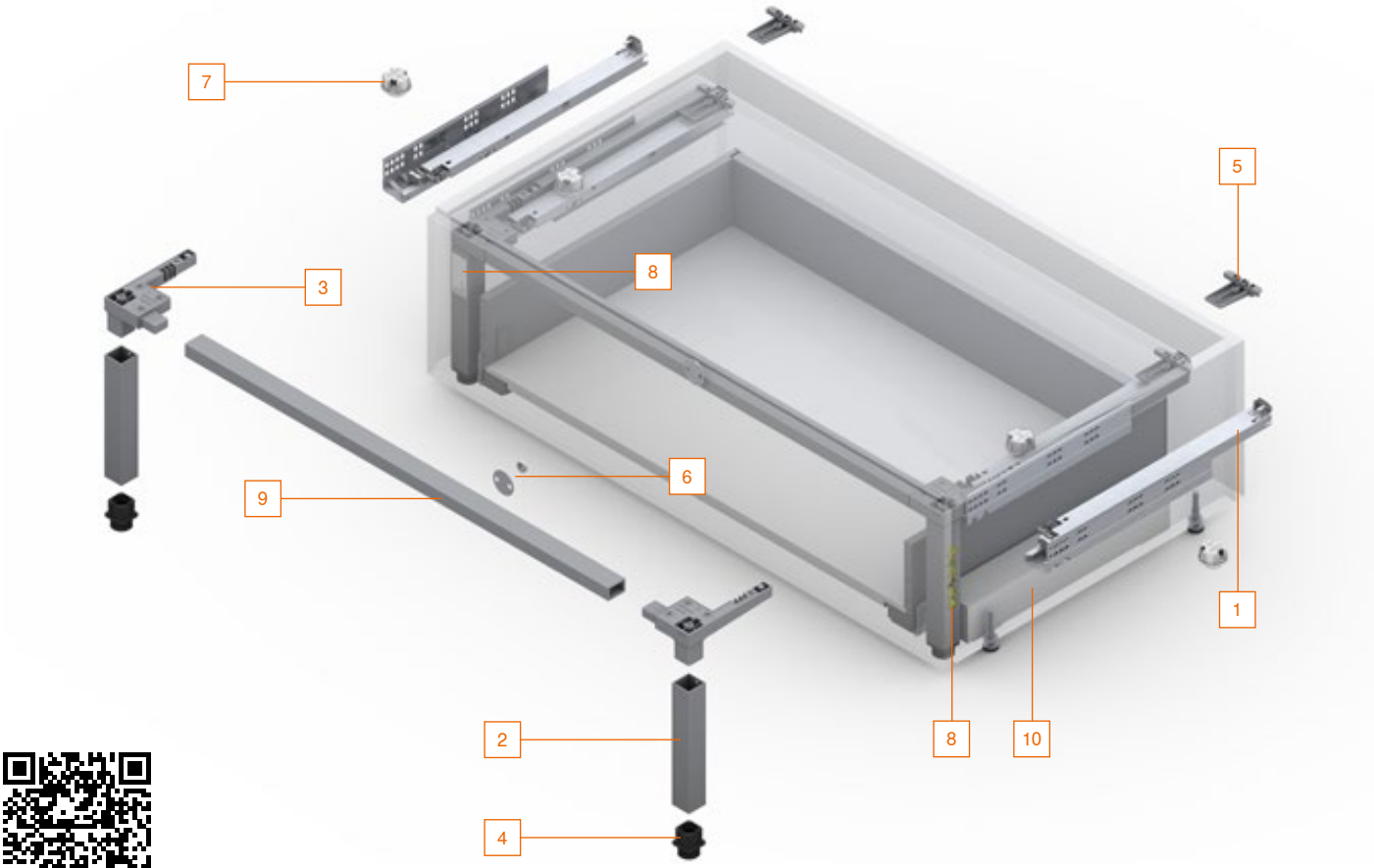


www.blum.com/configurator

| SPACE STEP set | | |
|---|---|---|
| **Nominal length (NL)** | **Colour** | |
| 410 mm | Orion grey matt | **Z95.4100** |
| 460 mm | Orion grey matt | **Z95.4600** |

**Consisting of:**

1 2 x TANDEM 561Hxxx1B95 left/right
2 2 x vertical support
3 2 x corner connector
4 2 x support foot
5 2 x rear panel bracket
6 1 x front connector set (magnet and catch plate)
7 4 x spring bumper*
8 2 x sticker (safety information and manufacturer information)
14 x flat headed screw (4 x 15 mm)
1 x installation instructions

* Recommendation: Cabinet width (KB) > 900 mm, 4 pieces

| 9 Horizontal cross profile | | |
|---|---|---|
| 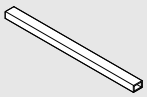 | Aluminium | |
| | For cutting to size | **Z95Q1040A** |
| | Cutting dimensions: Internal cabinet width (LW) - 130 mm | |
| | Recommendation: Cabinet width (KB) 1200 mm, use 2 pieces to prevent excessive bending | |

| 10 Spacer strip (optional) | | |
|---|---|---|
| 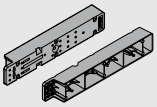 | For mounting the runners, suitable for all Blum box and runner systems | |
| | | **Z95D4100** |

KB Cabinet width

LW Internal cabinet width

## Ordering information

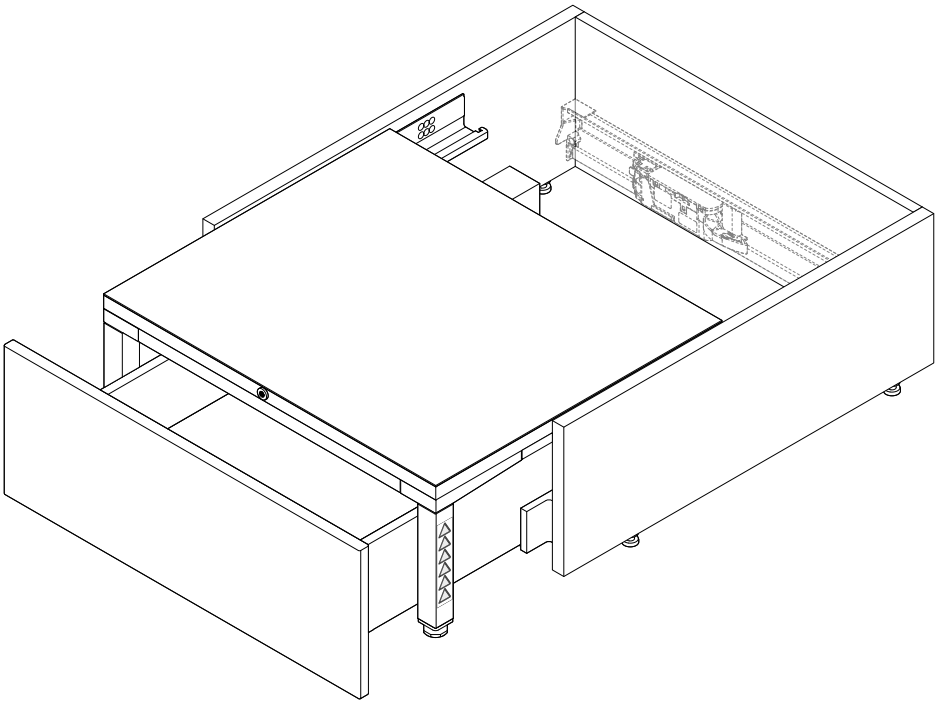

### Notes

**Maximum load:** 150 kg*

* As the manufacturer you are responsible for determining the actual load bearing capacity of your furniture with integrated SPACE STEP as per EN-14183.

**Possible cabinet heights:** The possible cabinet heights for the SPACE STEP are 150–250 mm

**Material recommendation:** A 3-layer board (3S) at least 21 mm thick is recommended for the plinth step.

**Step surface recommendation:** The step surface must be anti-slip. This can take the form of an anti-slip mat directly affixed to the step surface or by using anti-slip panel material.

**Attaching the labels:** EN-14183 requires both of the labels enclosed to be clearly displayed.

**Pull-out underneath SPACE STEP:** Only 30 kg or 40 kg runners may be used. The dynamic carrying capacity for the pull-out underneath SPACE STEP is 20 kg.

**Cabinet above SPACE STEP:** If storage items are kept on the cabinet base above SPACE STEP, we recommend protecting the base against sagging. This will prevent SPACE STEP rubbing on the cabinet base.

**TIP-ON BLUMOTION:** When using TIP-ON BLUMOTION, we recommend the use of an L5 unit.

## Planning

### LEGRABOX – height N

**Space requirements in the cabinet**

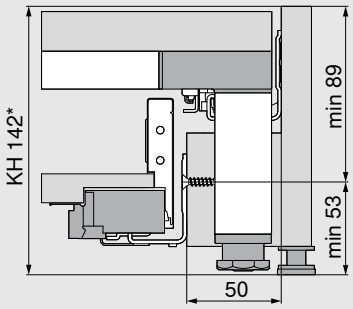


* When using the Blum spacer strip
min. cabinet height KH 148 mm

Cabinet width min. 400 mm

**Front dimensions for screw-on assembly**

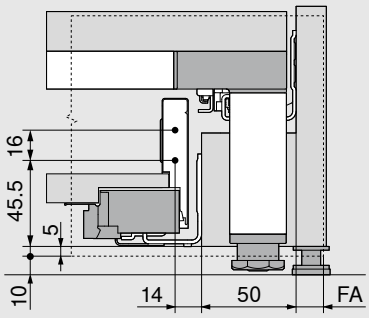


**Front drilling distances for EXPANDO**

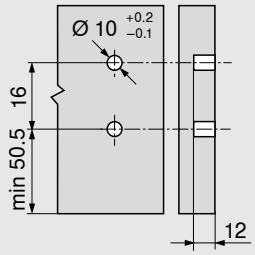


### LEGRABOX – height M

**Space requirements in the cabinet**

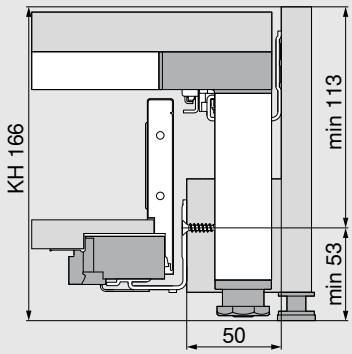


Cabinet width min. 400 mm

**Front dimensions for screw-on assembly**

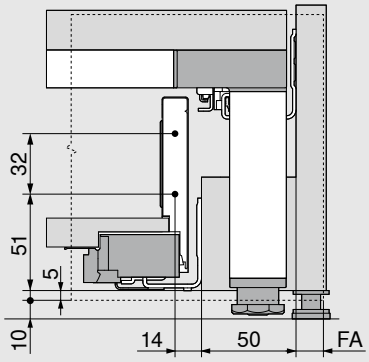


**Front drilling distances for EXPANDO**

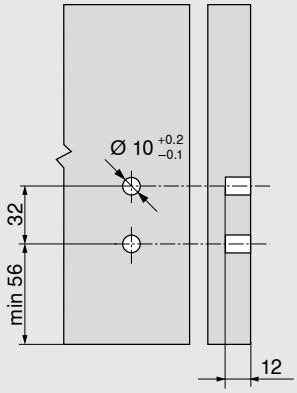


### LEGRABOX – height K

**Space requirements in the cabinet**

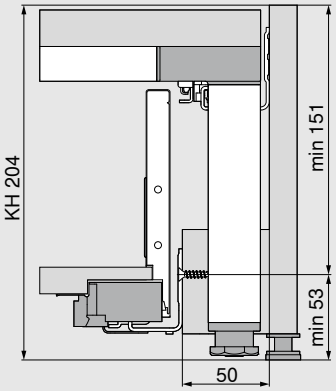


Cabinet width min. 400 mm

**Front dimensions for screw-on assembly**

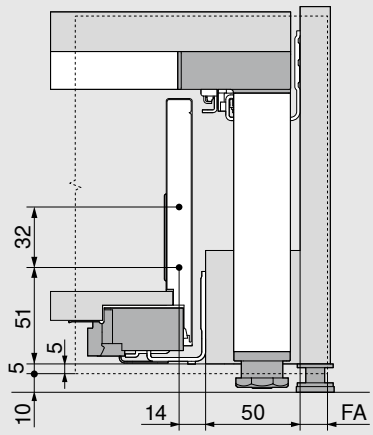


**Front drilling distances for EXPANDO**

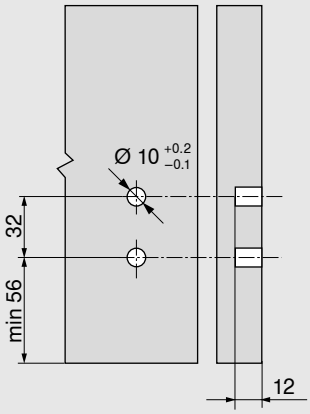


FA Front overlay

KH Cabinet height

Installation dimensions with a pull-out step thickness of at least 21 mm – without anti-slip mat

## Planning

### MERIVOBOX – height N

**Space requirements in the cabinet**

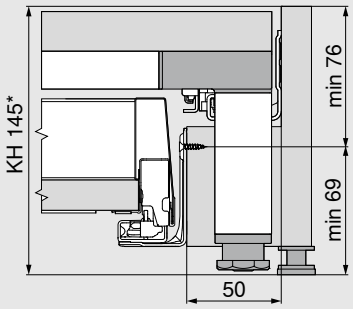


* When using the Blum spacer strip
min. cabinet height KH 146 mm

Cabinet width min. 400 mm

**Front dimensions for screw-on assembly**

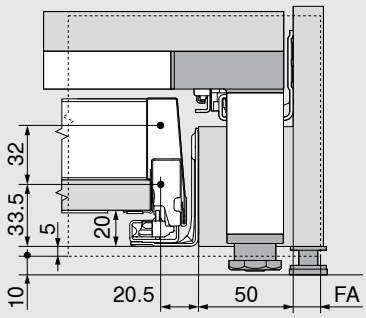


**Front drilling distances for EXPANDO**

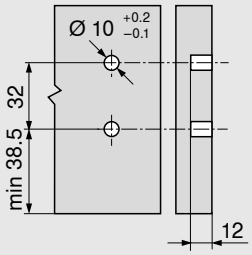


### MERIVOBOX – height M

**Space requirements in the cabinet**

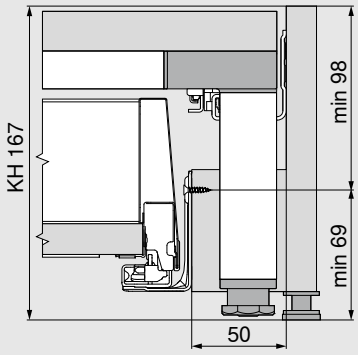


Cabinet width min. 400 mm

**Front dimensions for screw-on assembly**

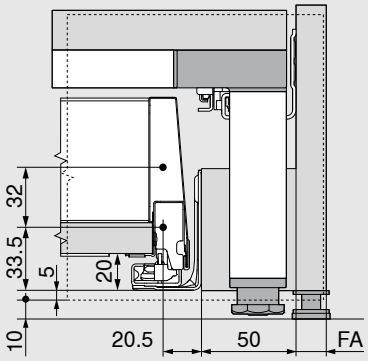


**Front drilling distances for EXPANDO**

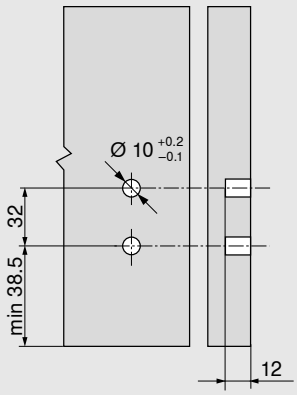


### MERIVOBOX – height K

**Space requirements in the cabinet**

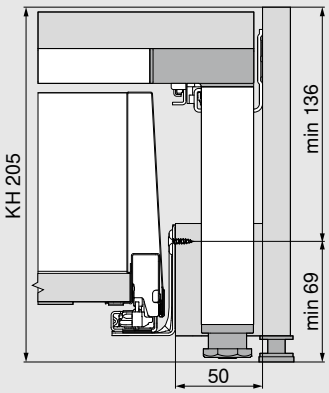


Cabinet width min. 400 mm

**Front dimensions for screw-on assembly**

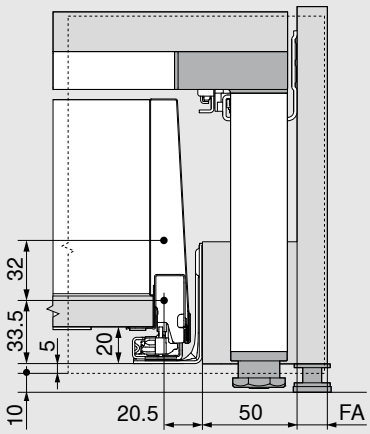


**Front drilling distances for EXPANDO**

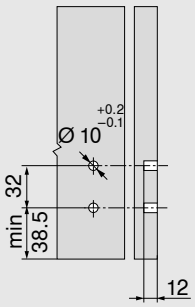


FA Front overlay

KH Cabinet height

Installation dimensions with a pull-out step thickness of at least 21 mm – without anti-slip mat

## Planning

### TANDEMBOX antaro – height N

**Space requirements in the cabinet**

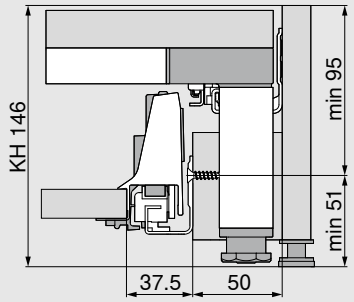


Cabinet width min. 400 mm

**Front dimensions for screw-on assembly**

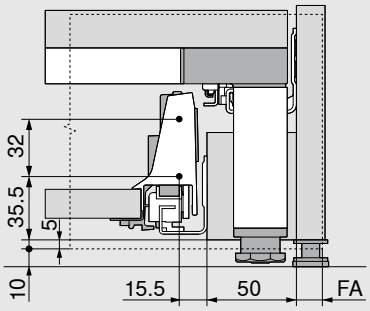


**Front drilling distances for EXPANDO**

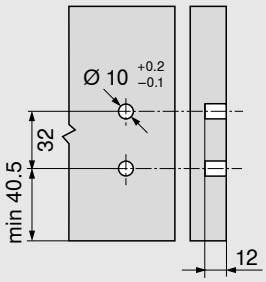


### TANDEMBOX antaro – height M

**Space requirements in the cabinet**

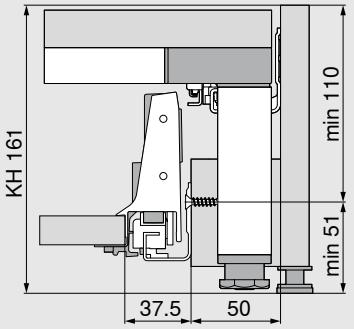


Cabinet width min. 400 mm

**Front dimensions for screw-on assembly**

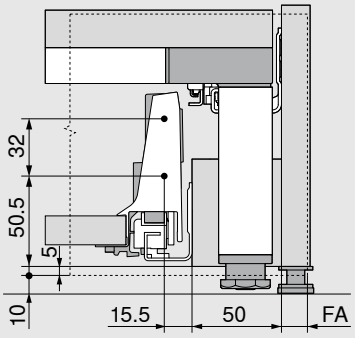


**Front drilling distances for EXPANDO**

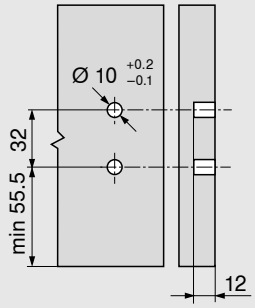


### TANDEMBOX antaro – height K

**Space requirements in the cabinet**

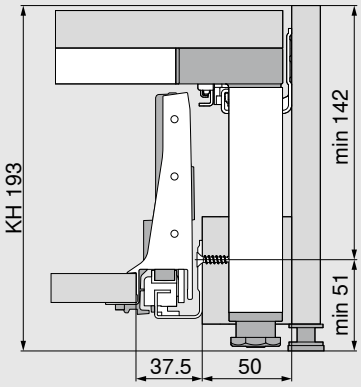


Cabinet width min. 400 mm

**Front dimensions for screw-on assembly**

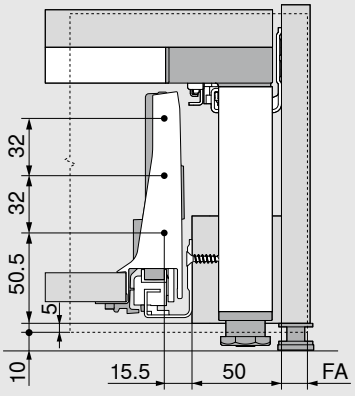


**Front drilling distances for EXPANDO**

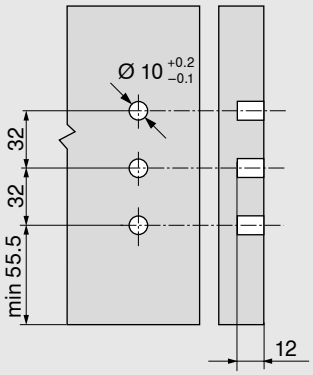


FA Front overlay

KH Cabinet height

Installation dimensions with a pull-out step thickness of at least 21 mm – without anti-slip mat

## Planning

### MOVENTO

| Space requirements in the cabinet | |
|---|---|
| 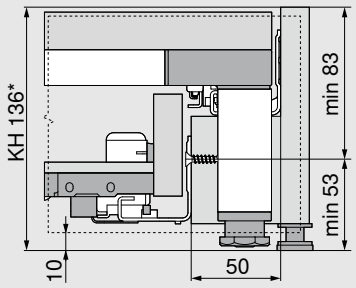 | |
| | * When using the Blum spacer strip min. cabinet height KH 148 mm |
| | Cabinet width min. 400 mm, with SERVO-DRIVE min. 450 mm |

### TANDEM

| Space requirements in the cabinet | |
|---|---|
| 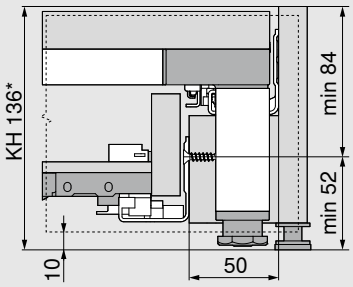 | |
| | * When using the Blum spacer strip min. cabinet height KH 148 mm |
| | Cabinet width min. 400 mm, with SERVO-DRIVE min. 450 mm |

KH Cabinet height

Installation dimensions with a pull-out step thickness of at least 21 mm – without anti-slip mat

## Planning

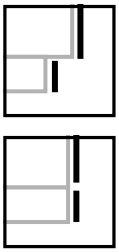

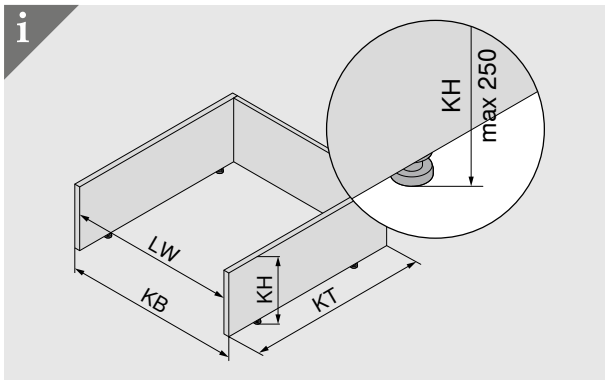


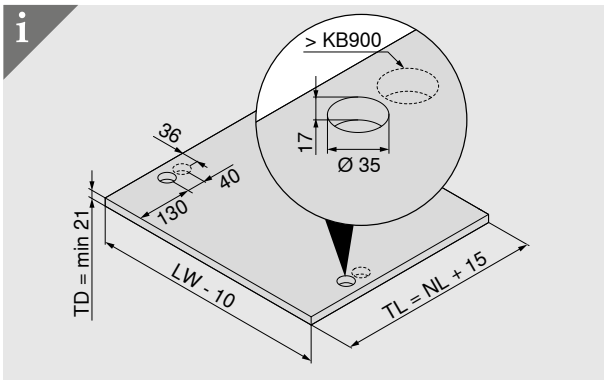

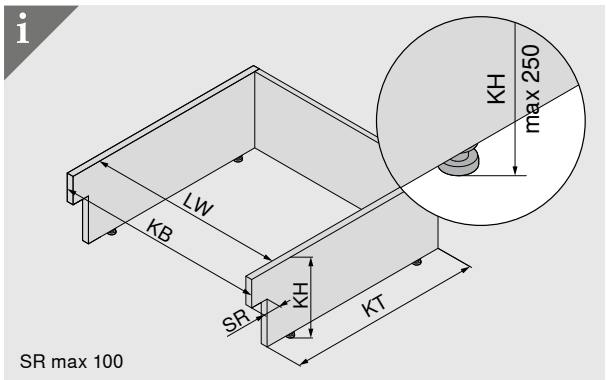


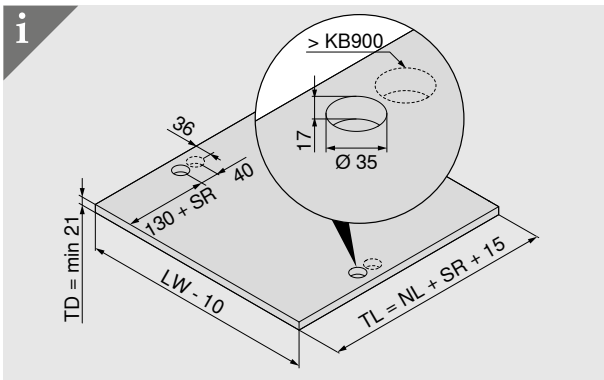


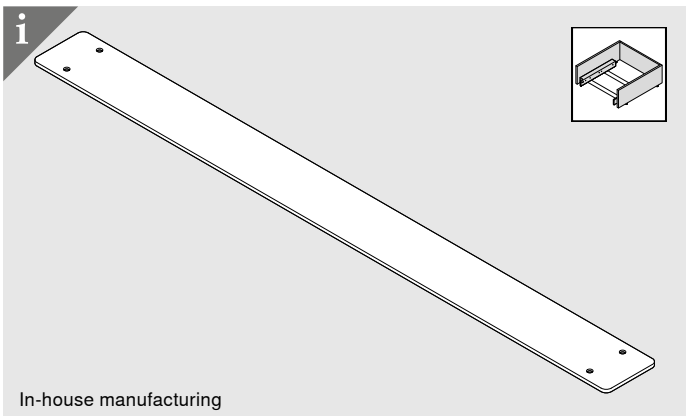


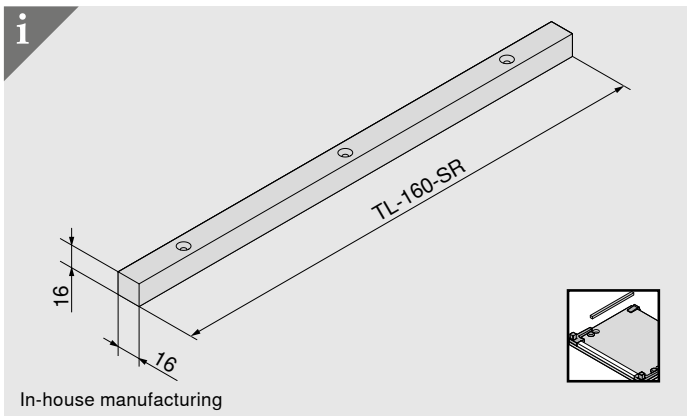


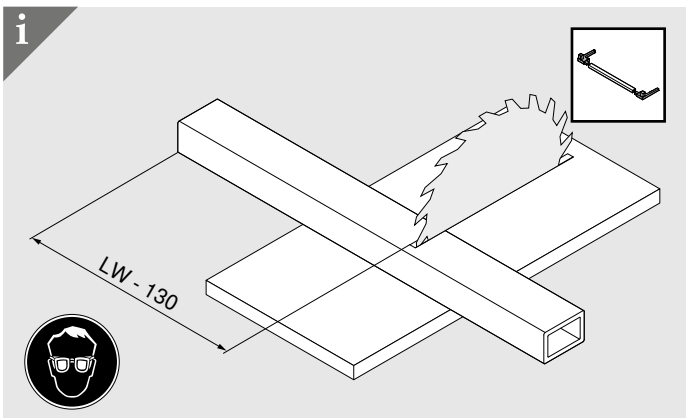


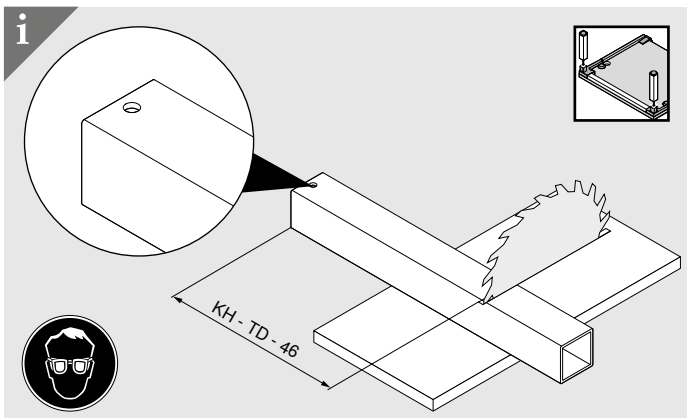


FA Front overlay
KB Cabinet width
KH Cabinet height
KT Cabinet depth
LW Internal cabinet width
NL Nominal length
SR Plinth recess
TD Pull-out step thickness
TL Pull-out step length

## Planning

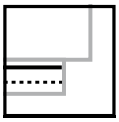

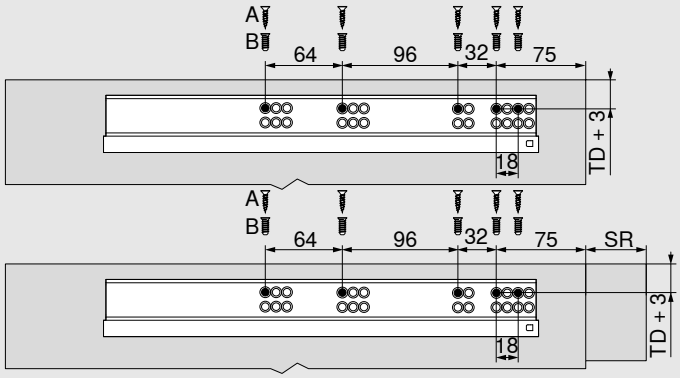


For 410 mm

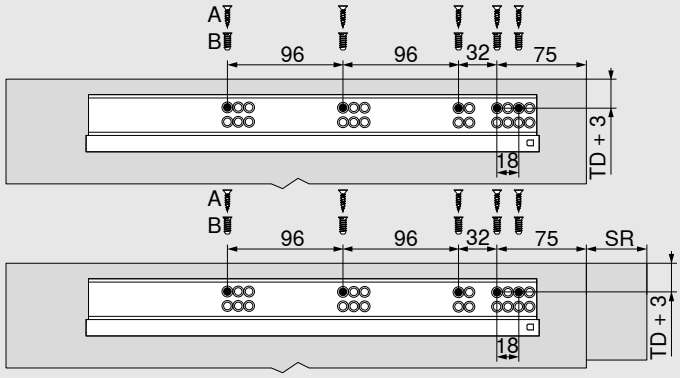


For 460 mm

NL Nominal length
SR Plinth recess
TD Pull-out step thickness

## Planning

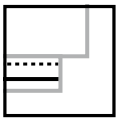

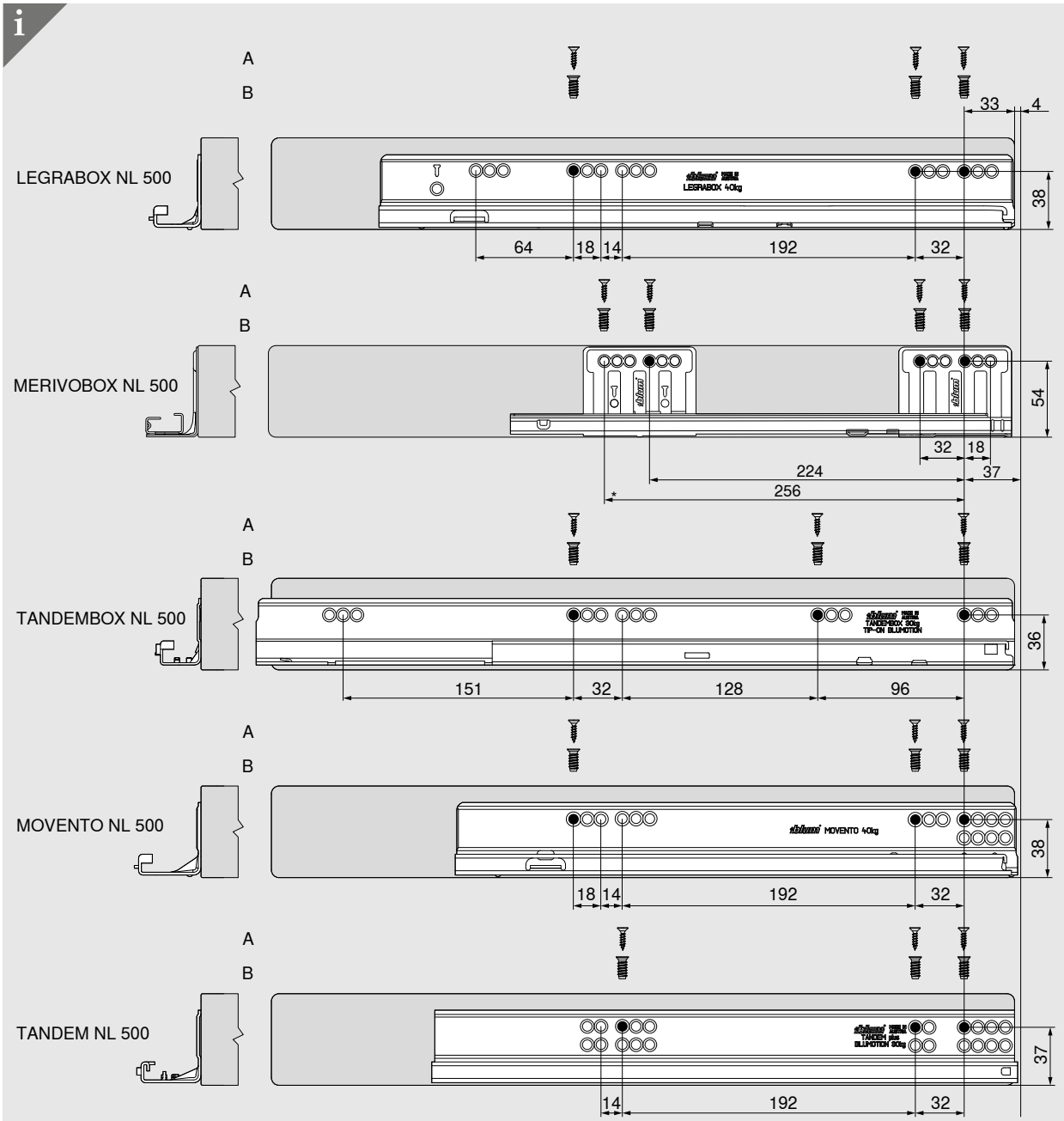


| | |
|---|---|
| A | Chipboard screw |
| B | Use system screw with Blum spacer strip |

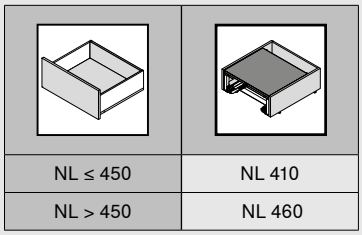

| | |
|---|---|
| NL ≤ 450 | NL 410 |
| NL > 450 | NL 460 |

NL Nominal length
SR Plinth recess
TD Pull-out step thickness

## Assembly

**Dimensions – wood spacer strip**

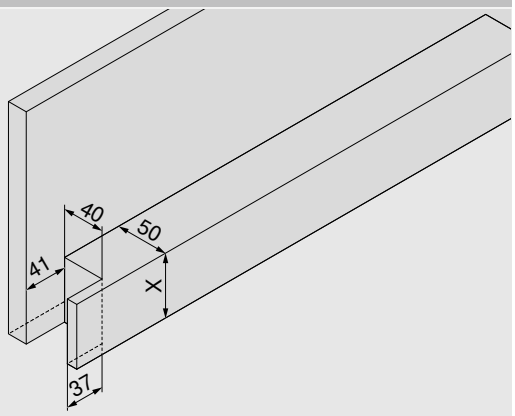


In-house manufacturing

| | X (mm) |
|---|---|
| LEGRABOX | 50 |
| MERIVOBOX | 65 |
| TANDEMBOX | 50 |
| MOVENTO I TANDEM | 50 |

**Dimensions – Blum spacer strip**

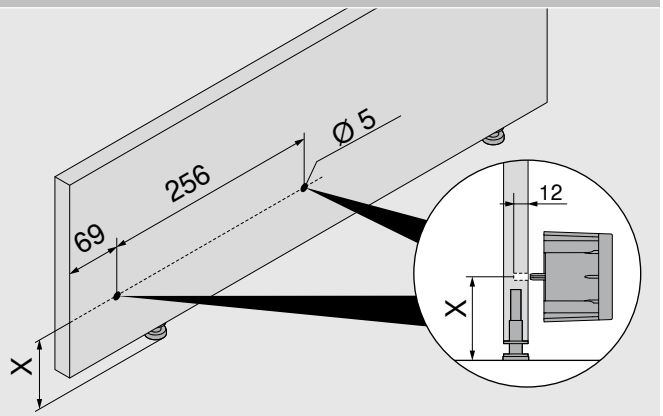


| | X (mm) |
|---|---|
| LEGRABOX | 53 |
| MERIVOBOX | 51 |
| TANDEMBOX | 51 |
| MOVENTO I TANDEM | 53 |

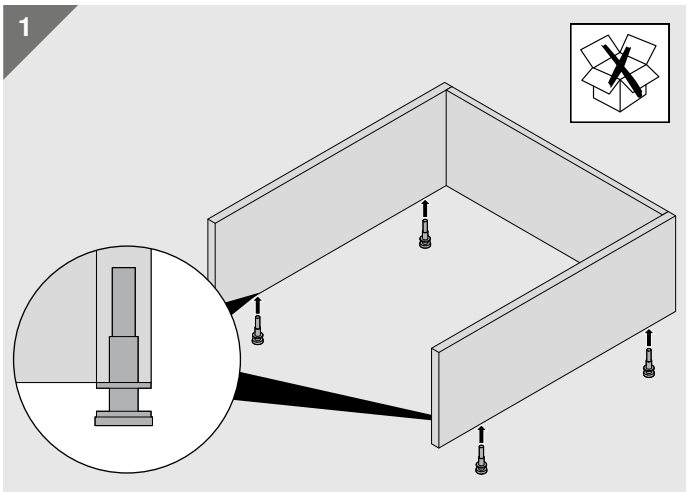


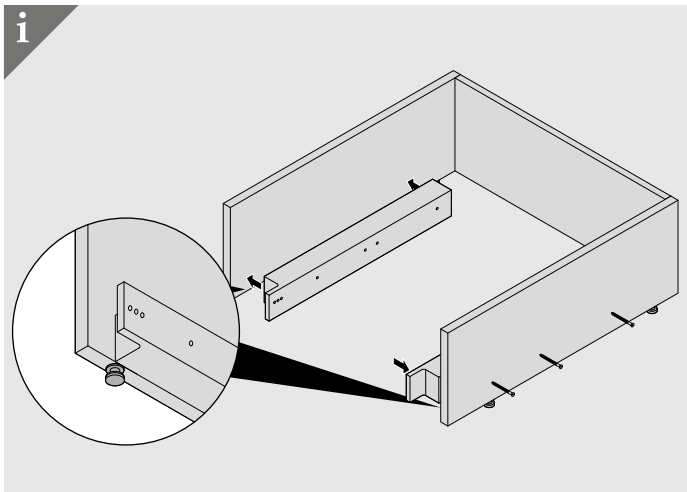


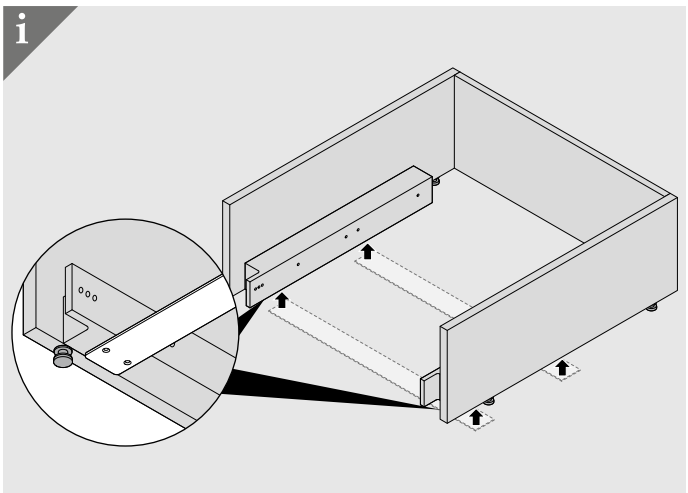

## Assembly

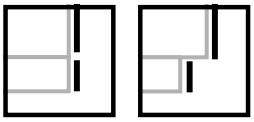

**2** (3.5 x 15) *(3.5 x 10)

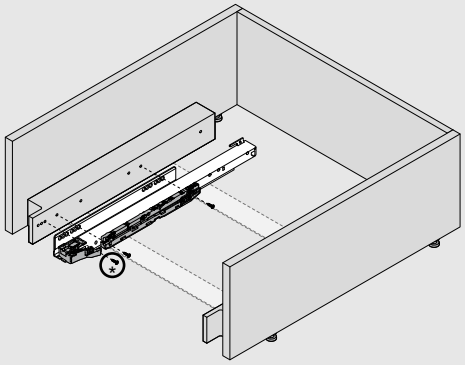

**3** (3.5 x 15)

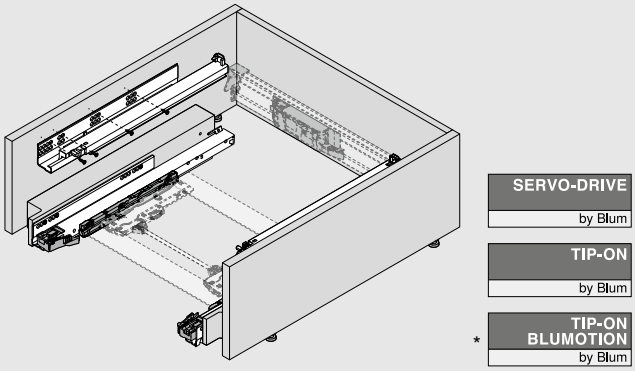


* Recommendation: Only combine with an L5 unit

**4** (4 x 15)

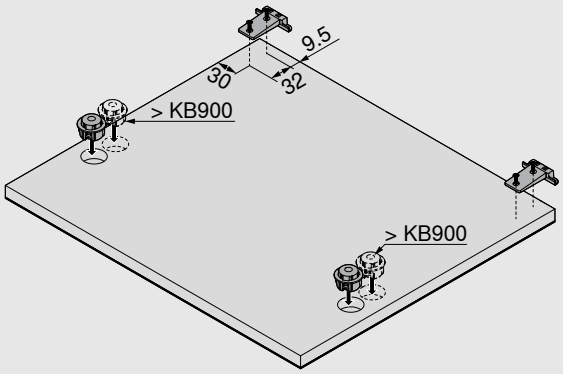


**5**

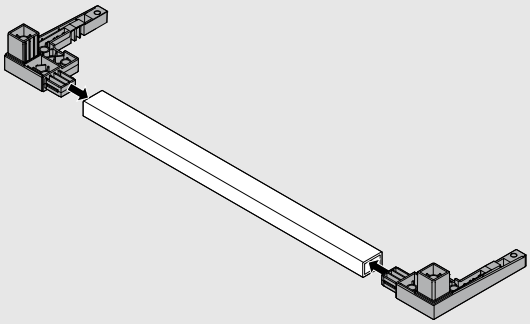

## Assembly

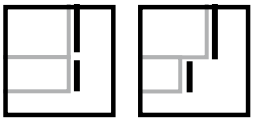

6 (4 x 15)

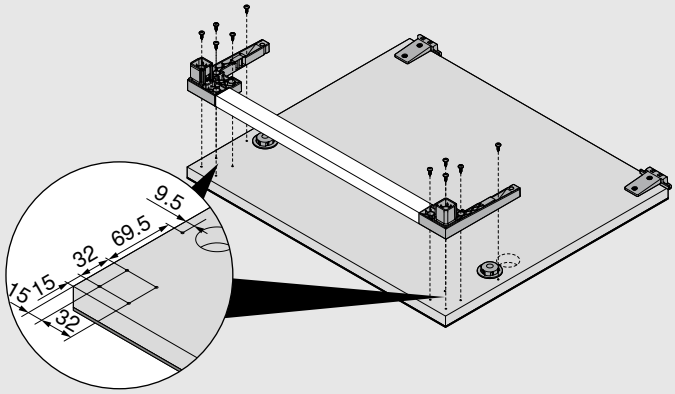


7 (3.5 x 25)

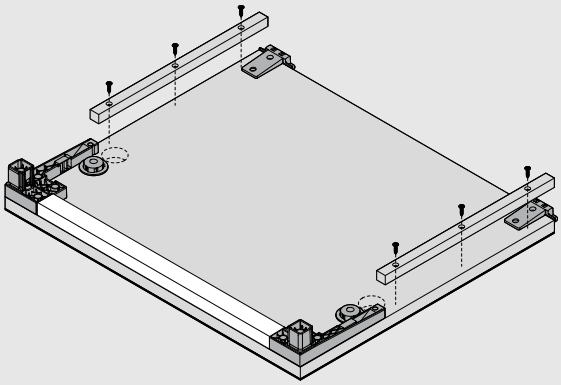

8

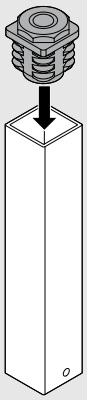

9

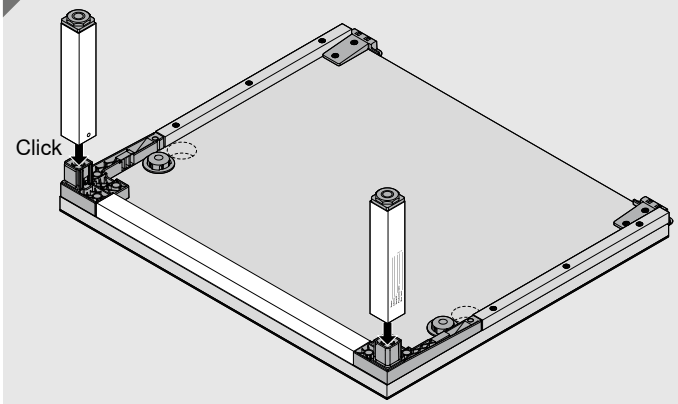


KB Cabinet width

## Assembly

4 (4 x 15)

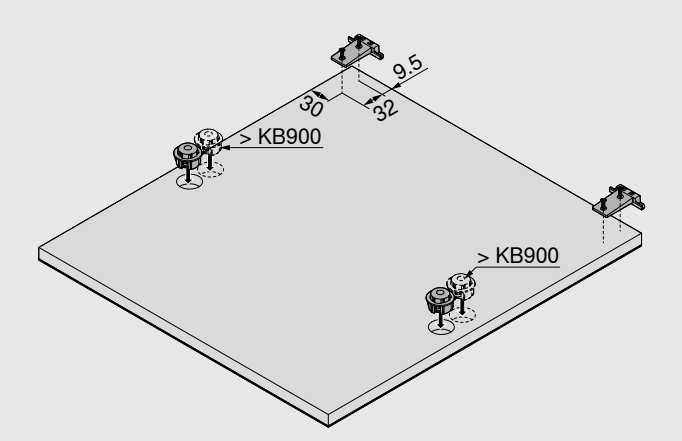


5

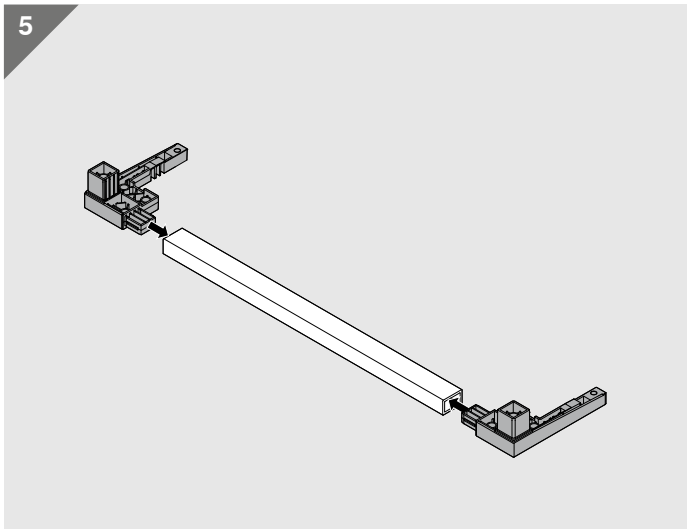

6 (4 x 15)

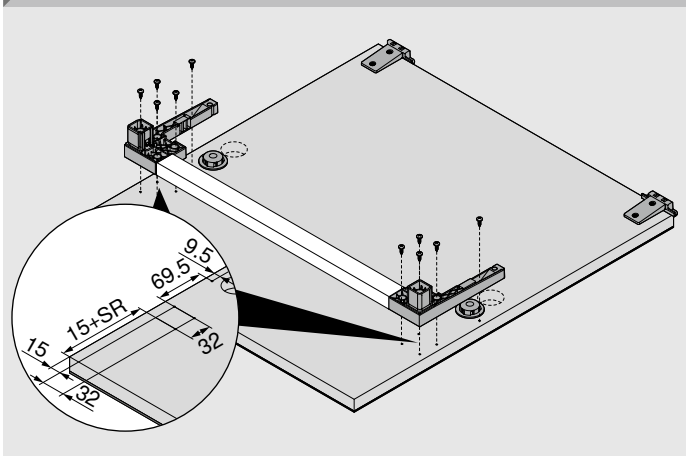


7 (3.5 x 25)

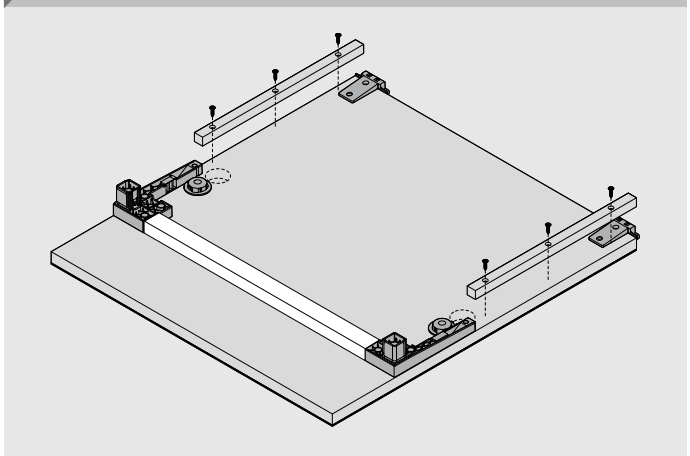

8

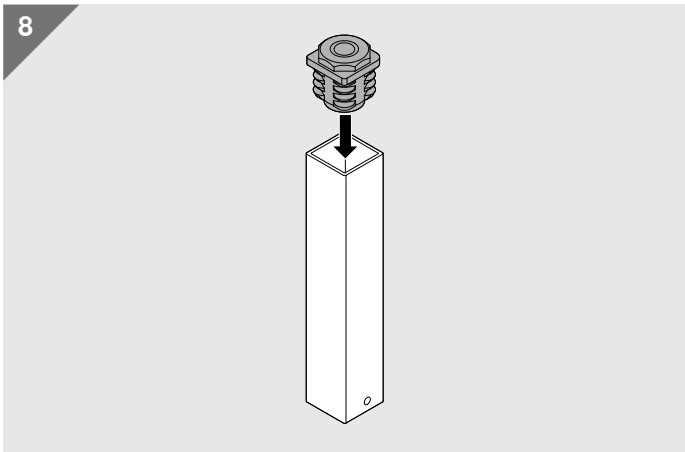

9

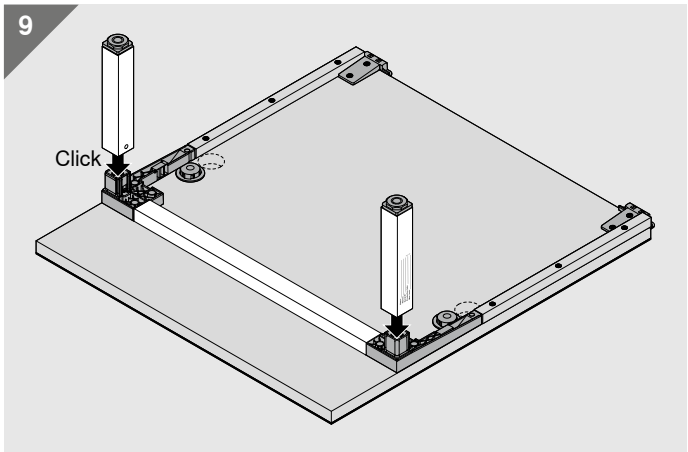


KB Cabinet width
SR Plinth recess

## Assembly

10 (3.5 x 25)

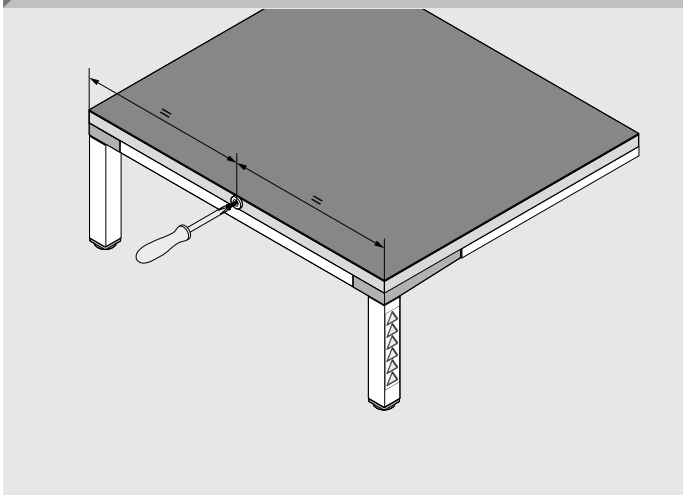

11

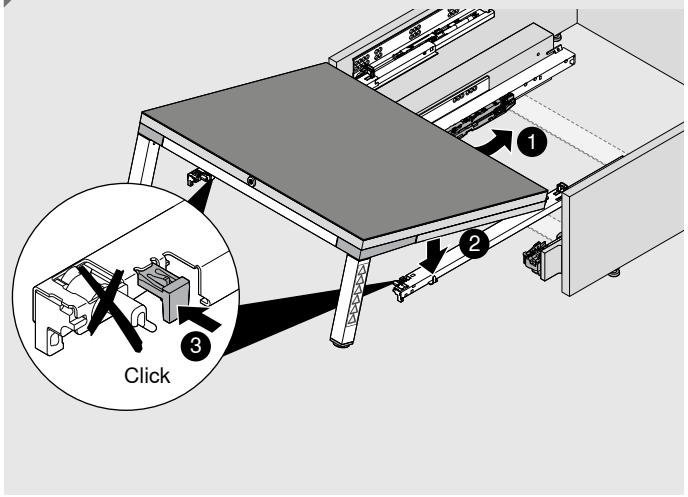


12 (3.5 x 15)

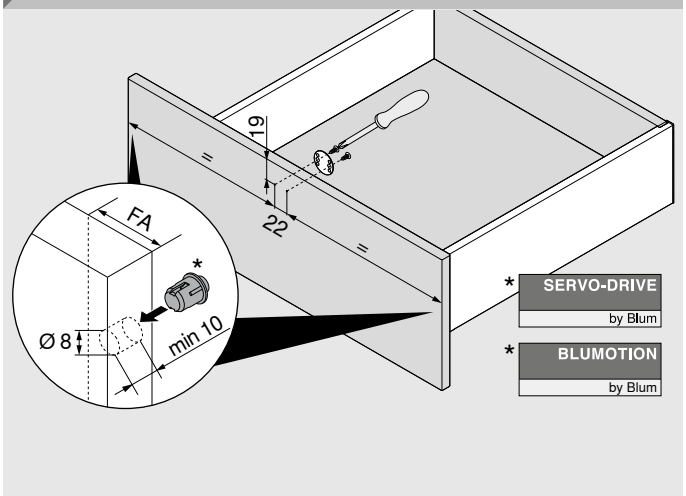


13

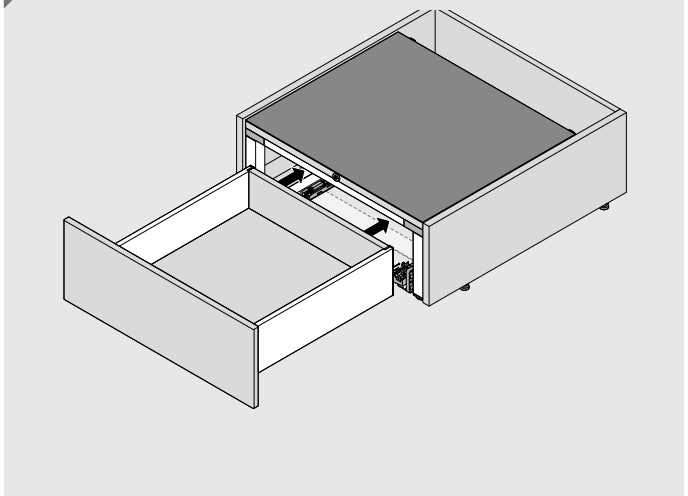

i

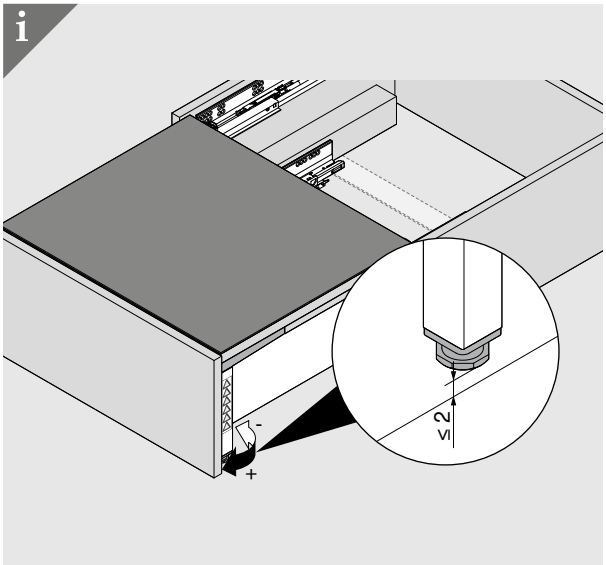


i

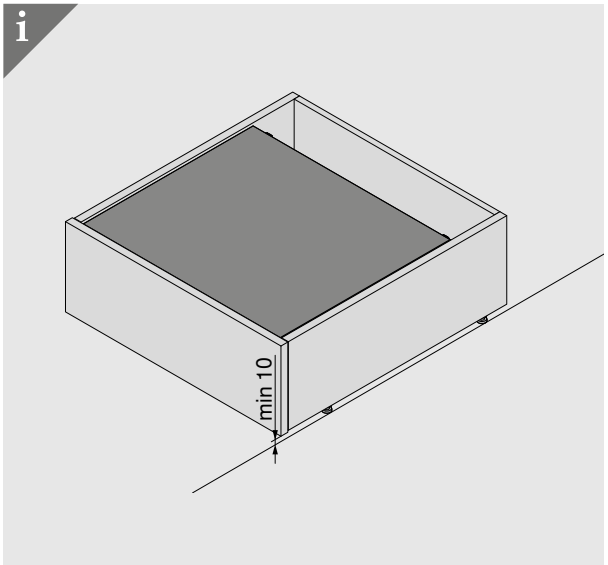

## Removal

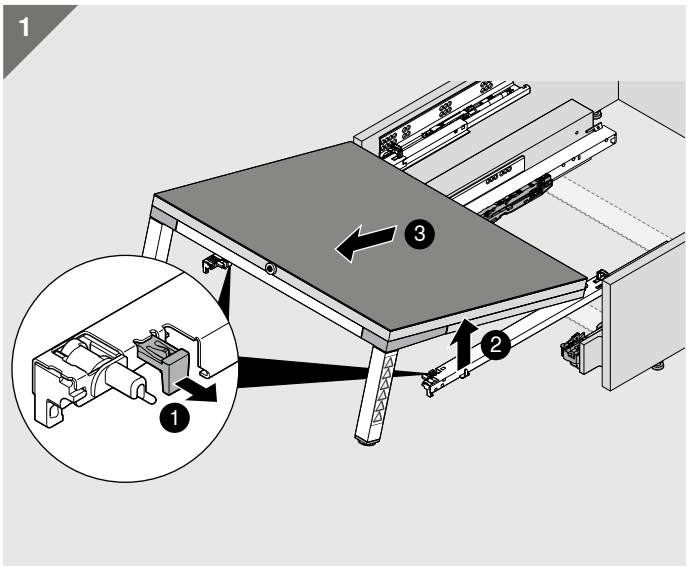


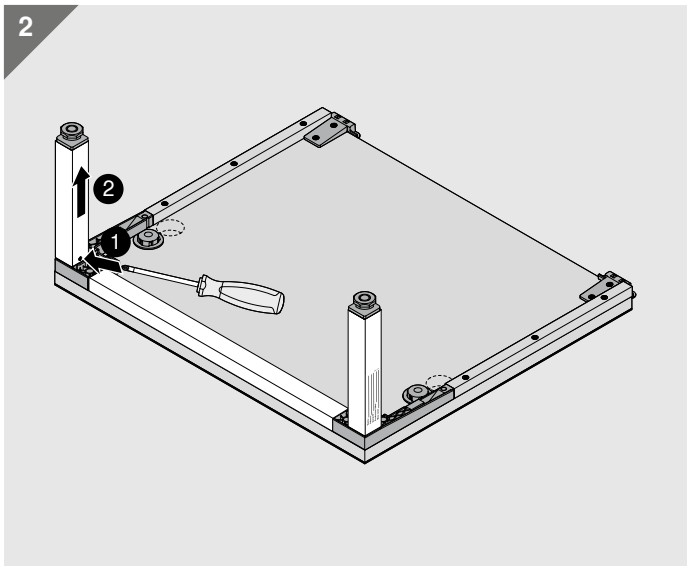


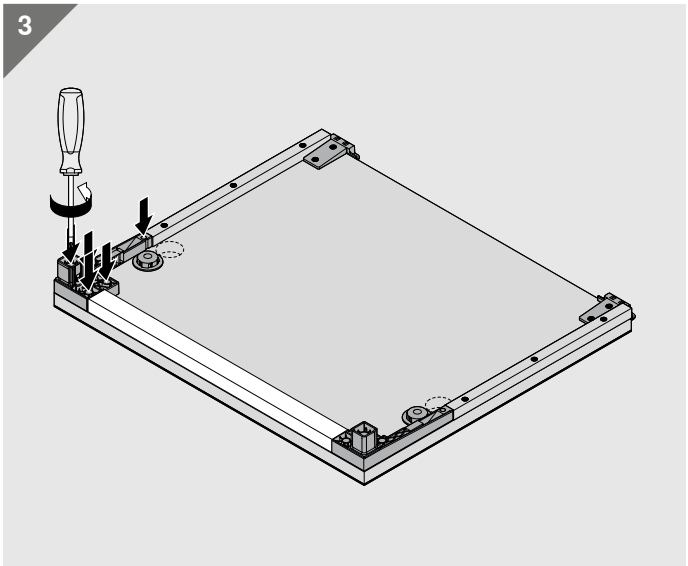

# moving ideas

We believe that ideas can move the world. We offer innovative fittings, inspiring furniture concepts and appropriate services so that you can turn your creative ideas into reality. We are driven by your needs, international trends and our shared vision of a better quality of living. Let us work together to create moving ideas.

## Quality of living

We would like you to enjoy greater convenience and functionality when using furniture.

## Product range

Everything from a single source: our wide range of products allows you to keep up with today's and tomorrow's trends.

## Inspiration

We monitor global trends and strive to create the solutions of tomorrow. We like to share our insights with you.

## Innovation

We stay in motion. Curiosity and pioneering spirit drive us to develop new products and services for you.

## Services

We support your daily operations with customised services tailored to your processes.

## Quality

We continuously strive to improve our products, services and ourselves.

## Trust

We take responsibility for partnerships, our employees, society and the environment.

Julius Blum started our journey in 1952 with horseshoe studs. Today we supply innovative fittings to customers in over 120 countries.

Look for our FSC™-certified products

FSC
www.fsc.org
FSC™ C115115

All content is copyrighted by Blum.
Subject to technical modifications and changes to the range without notice.
IDNR: 000.000.0 · EP-468/6 EN-NO/06.24

Blum Norge AS
Postboks 1110
3515 Hønefoss
Tlf.: 32 127020
E-post: lars.ringlund@blum.com
www.blum.com

Julius Blum GmbH
6973 Höchst, Austria
Tel.: +43 5578 705-0
Fax: +43 5578 705-44
E-mail: info@blum.com
www.blum.com

Our sites in Austria, Poland and China are certified to the international standards mentioned below.
Our site in the USA is certified to ISO 9001.
Our site in Brazil is certified to ISO 9001, ISO 14001 and ISO 45001.

ISO 9001 Certified Quality System
ISO 14001 Certified Environmental System
ISO 50001 Certified Energy System

blum®