# MOVENTO – The sophisticated runner system

www.blum.com

# Quality steel for your wooden design ideas

MOVENTO is a concealed runner system and the sophisticated solution for your wooden design ideas. The synchronised feather-light glide ensures an ultra-smooth running action. The 4-dimensional adjustment options provide you with a precise gap layout. What's more, the full extension excels in terms of high stability and load bearing capacity. MOVENTO can be used with all 4 motion technologies for soft and effortless opening and closing.

**Contents**


**MOVENTO**

04 Application options

08 Product properties

14 Services and assembly devices

16 Blum runner systems

**Ordering and planning information**

18 760H / 766H – drawer / inner drawer

21 760H / 766H – drawer / inner drawer – base fixing

23 760H / 766H – pull-out shelf – base fixing

25 Accessories

26 Attachment of runners

28 TIP-ON BLUMOTION

31 TIP-ON synchronisation

# One runner system for all living areas

The MOVENTO runner system boasts an impressively wide range of applications and is suitable for use in all living areas. Its load bearing capacity of up to 70 kg and high stability make it the preferred solution for extremely wide and deep high fronted pull-outs. It makes real storage wonders out of cabinets in the kitchen, living room and hall.

## MOVENTO in kitchens

Your customers open and close drawers again and again during everyday kitchen use. The MOVENTO runner system can handle these demands easily. Its stability and load bearing capacity make it ideal for wide and high pull-outs with heavy items, such as pots or pans. The 4-dimensional front adjustment options guarantee a precise gap layout.

# MOVENTO Properties

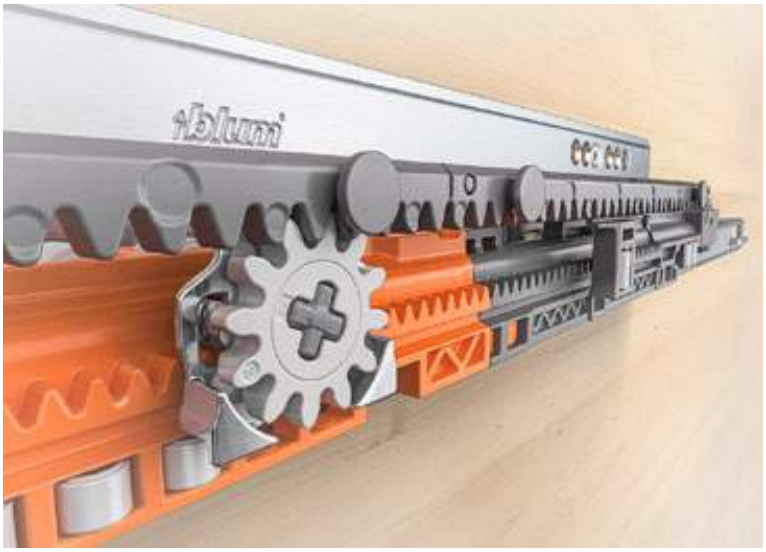

**Synchronised feather-light glide for more peace and quiet – everything in perfect harmony**

The synchronised feather-light glide is a special feature of the MOVENTO runner system. The runner components run smoothly and silently – for soft and effortless opening and closing. Low-friction cylindrical nylon rollers ensure an optimal weight distribution.

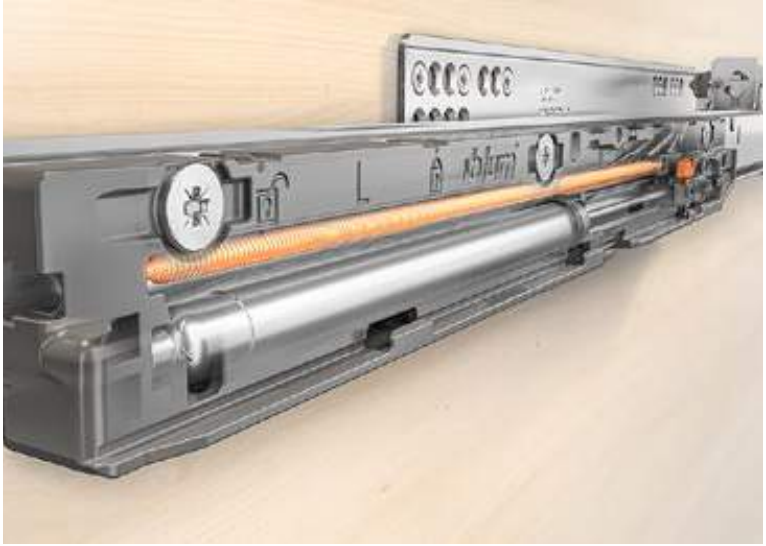

**Innovative technology for greater quality of motion – simple, soft and effortless**

Your customers will appreciate the enhanced ease of use of MOVENTO; when the drawer is opened, the runner profile immediately transitions to the feather-light glide. And thanks to the BLUMOTION soft-close mechanism, it closes again just as softly and effortlessly – even when heavy pull-outs receive a forceful push.

**High stability for a greater load bearing capacity – more than a match for all requirements**

MOVENTO boasts excellent stability and a high load bearing capacity. Thanks to its superb sag values, the runner system is ideal for applications near to the floor, too. This makes the full extension with 40 kg and 70 kg load bearing classes the first choice for all living areas, even when you are using wide, high and deep pull-outs.

# Motion technologies for MOVENTO

MOVENTO can be implemented with all 4 motion technologies by Blum – you decide which one best meets your requirements. Adaptive soft-close BLUMOTION ensures that your wooden drawers close softly and effortlessly; they seem to open by themselves with the SERVO-DRIVE electrical opening support system. TIP-ON BLUMOTION combines a mechanical opening support system with a soft-close mechanism. Drawers open with a single touch thanks to TIP-ON.

| |
|---|
| **BLUMOTION** |
| by Blum |

| |
|---|
| **SERVO-DRIVE** |
| by Blum |

| |
|---|
| **TIP-ON BLUMOTION** |
| by Blum |

| |
|---|
| **TIP-ON** |
| by Blum |

# 4 dimensions for greater precision

With MOVENTO, you can adjust the height, tilt and depth of the front and also modify it at the sides. And you can benefit from optional depth adjustment on furniture with inset fronts. There is no need to alter the drawer and you get a precise gap layout quickly, easily and without tools.

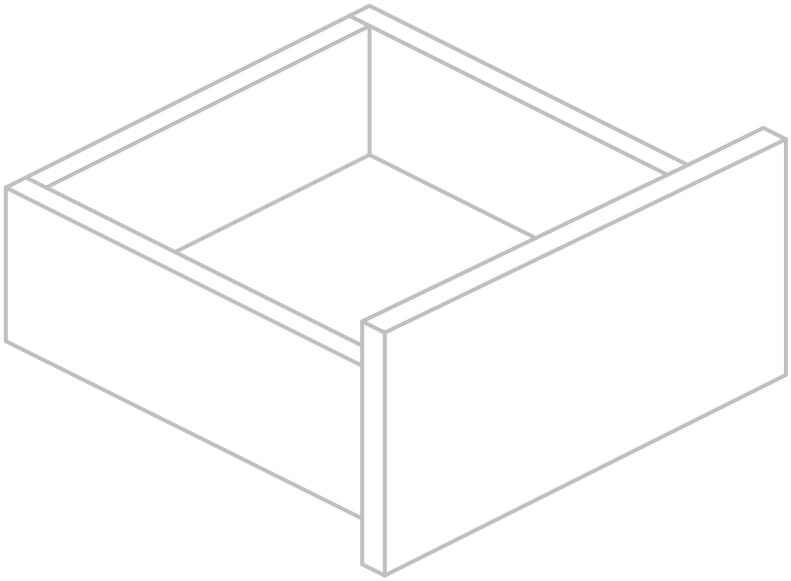

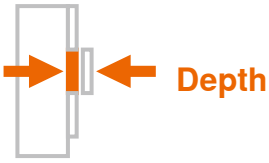


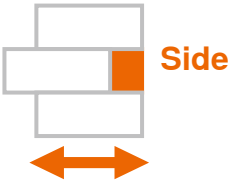


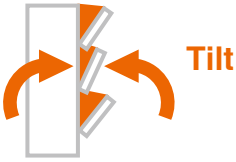

# Support every step of the way

For MOVENTO, we also offer services and assembly devices for all your day-to-day tasks. For instance, the MINIPRESS top drilling and insertion machine with EASYSTICK assists with all vertical and horizontal drilling operations. The drilling template for distance bumpers, the universal drilling template, the front gap template for MOVENTO and the gauge set and marking template all ensure that assembly is quick, easy and precise. Thanks to the EASY ASSEMBLY app, 4-dimensional adjustment of the front takes no time at all.

**EASY ASSEMBLY app**
www.blum.com/eaapp

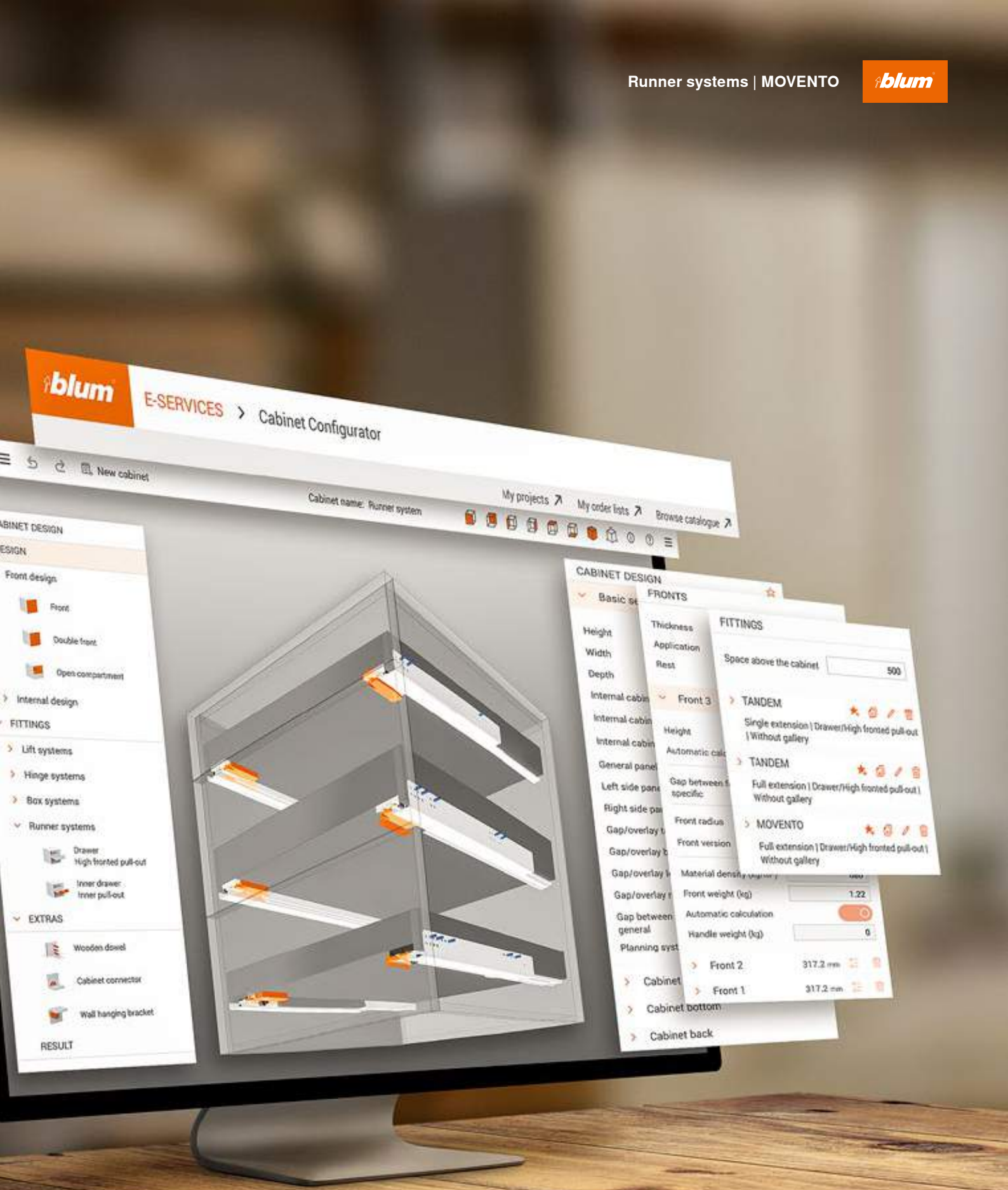


**Cabinet Configurator**
www.blum.com/cabinetconfig

# The right runner system for every requirement

Depending on your requirements, there are several different runner systems for your drawers. The versatile TANDEM runner system impresses with a broad range: choose from several types of extension and three motion technologies. The MOVENTO concealed runner system is the sophisticated solution to meet exacting requirements: it boasts a synchronised feather-light glide, 4-dimensional adjustment and is fully compatible with all four Blum motion technologies.

## TANDEM
### Full extension

## TANDEM
### Single extension

# MOVENTO

## 760H/766H – drawer/inner drawer

- Concealed full extension
- Includes integrated, switchable BLUMOTION S for soft and effortless closing, and can be combined with SERVO-DRIVE or TIP-ON BLUMOTION
- Or with integrated TIP-ON, the mechanical opening support system
- Synchronised feather-light glide
- BLUMATIC self-closing feature
- Tool-free side, height and tilt adjustment
- Optional tool-free depth adjustment
- Built-in width and depth tolerance compensation

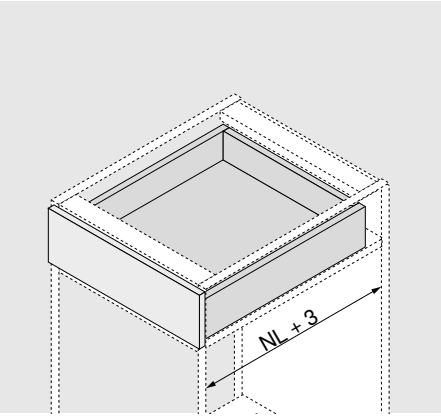


### Ordering information

| 1 | Runners left/right | | | | |
|---|---|---|---|---|---|
| | | BLUMOTION S* | | TIP-ON | |
| | NL (mm) | 40 kg | 70 kg | 40 kg | 70 kg |
| 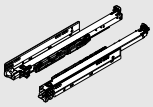 | 250** | 760H2500S | | 760H2500T | |
| | 270 | 760H2700S | | 760H2700T | |
| | 300 | 760H3000S | | 760H3000T | |
| | 320 | 760H3200S | | 760H3200T | |
| | 350 | 760H3500S | | 760H3500T | |
| | 380 | 760H3800S | | 760H3800T | |
| | 400 | 760H4000S | | 760H4000T | |
| | 420 | 760H4200S | | 760H4200T | |
| | 450 | 760H4500S | 766H4500S | 760H4500T | 766H4500T |
| | 480 | 760H4800S | | 760H4800T | |
| | 500 | 760H5000S | 766H5000S | 760H5000T | 766H5000T |
| | 520 | 760H5200S | 766H5200S | 760H5200T | 766H5200T |
| | 550 | 760H5500S | 766H5500S | 760H5500T | 766H5500T |
| | 580 | | 766H5800S | | 766H5800T |
| | 600 | 760H6000S | 766H6000S | 760H6000T | 766H6000T |
| | 650 | | 766H6500S | | 766H6500T |
| | 700*** | | 766H7000S | | 766H7000T |
| | 750*** | | 766H7500S | | 766H7500T |
| | *Suitable for SERVO-DRIVE and TIP-ON BLUMOTION | | | | |
| | **Cannot be used in combination with TIP-ON BLUMOTION | | | | |
| | ***Load bearing class: 60 kg | | | | |

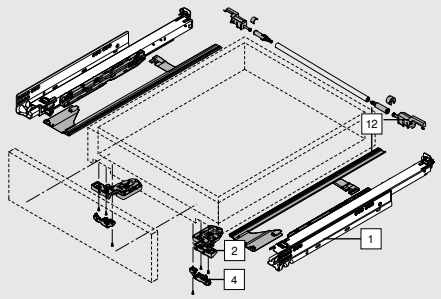


| 2 | Locking device left/right | |
|---|---|---|
| | **Material** | Nylon/steel |
| | **Colour** | Orange |
| | Left/right must be ordered separately | **T51.7601** |

| 4 | Depth adjustment left/right (optional) | |
|---|---|---|
| 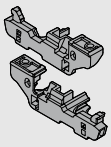 | **Material** | Nylon |
| | **Colour** | RAL 7037 dust grey |
| | Left/right must be ordered separately | **298.7601** |
| | Only for inset applications for MOVENTO with BLUMOTION. Integrated SERVO-DRIVE bumper. | |

NL Nominal length

## 760H/766H – drawer/inner drawer

### Accessories

| 12 | Side stabiliser set | |
|---|---|---|
| 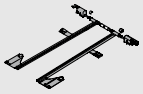 | For KB 1400 mm for cutting to size | |
| | **For NL up to (mm)** | |
| | 400 | ZS7M400MU |
| | 600 | ZS7M600MU |
| | 750 | ZS7M750MU |
| | Shaft cutting dimensions: Internal cabinet width (LW) – 315 mm | |
| | Gear rack cutting: NL + 10 mm | |

NL Nominal length

## 760H/766H – drawer/inner drawer

### Planning

**Space requirements in the cabinet**

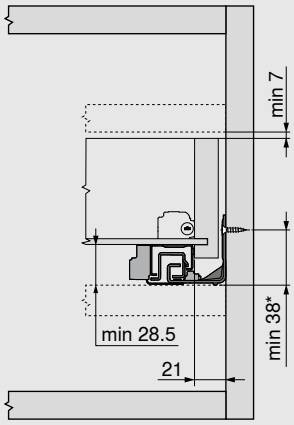


* + 1 mm for assembly of the runners prior to cabinet assembly

**Drawer/inner drawer**

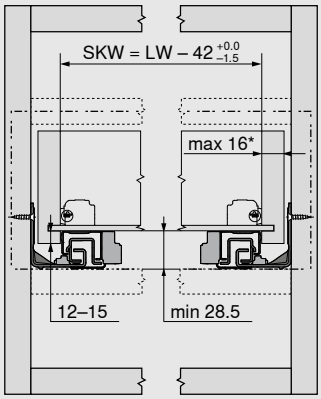


* Limited side adjustment for a drawer side panel thickness of 16 mm, but with full tolerance utilisation of the internal drawer width

**Drawer**

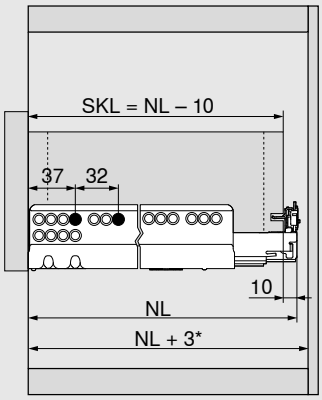


* Additional +12 mm with side stabiliser

**Inner drawer**

**with BLUMOTION S**

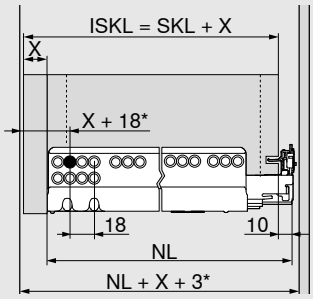


* Additional + 3 mm with depth adjustment

**with TIP-ON**

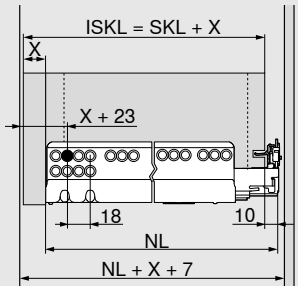


**Drawer assembly**

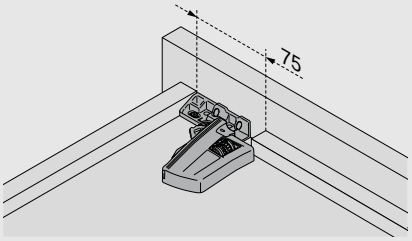


Use drilling template T65.1000.02

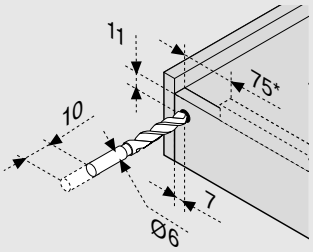


* TIP-ON BLUMOTION 125 mm

ISKL Inner drawer length
LW Internal cabinet width
NL Nominal length
SKL Drawer depth
SKW Internal drawer width
X Front thickness

## 760H – drawer/inner drawer – base fixing

- Concealed full extension
- Includes integrated, switchable BLUMOTION S for soft and effortless closing, and can be combined with SERVO-DRIVE or TIP-ON BLUMOTION
- Synchronised feather-light glide
- BLUMATIC self-closing feature
- Tool-free side, height and tilt adjustment
- Optional tool-free depth adjustment
- Built-in width and depth tolerance compensation
- For base fixing/fixed shelf fixing

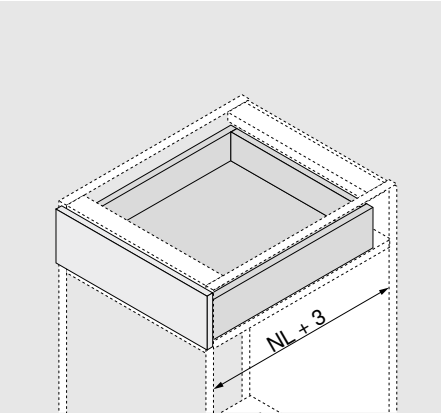


### Ordering information

| 1 | Left/right runners for base fixing | |
|---|---|---|
| 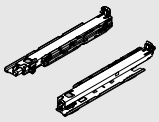 | | BLUMOTION S* |
| | **NL (mm)** | **40 kg** |
| | 350 | 760H3500SU |
| | 400 | 760H4000SU |
| | 450 | 760H4500SU |
| | 500 | 760H5000SU |
| | *Suitable for SERVO-DRIVE and TIP-ON BLUMOTION | |

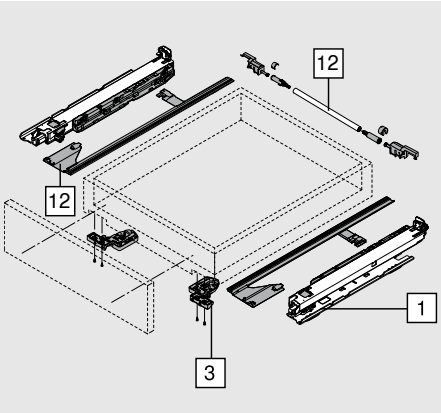


| 3 | Locking device left/right | | |
|---|---|---|---|
| | **Material** | Nylon/steel | |
| | **Colour** | Orange | |
| | Left/right must be ordered separately | | T51.7601 |

### Accessories

| 12 | Side stabiliser set | |
|---|---|---|
| 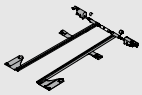 | For KB 1400 mm for cutting to size | |
| | **For NL up to (mm)** | |
| | 400 | ZS7M400MU |
| | 600 | ZS7M600MU |
| | 750 | ZS7M750MU |
| | Shaft cutting dimensions: Internal cabinet width (LW) – 315 mm | |
| | Gear rack cutting: NL + 10 mm | |

NL Nominal length

## 760H – drawer/inner drawer – base fixing

### Planning

**Space requirements in the cabinet**

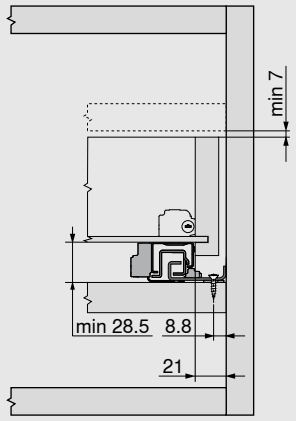


**Drawer/ inner drawer**

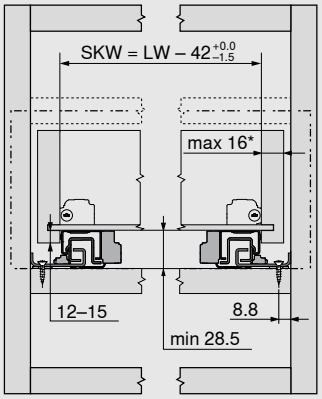


* Limited side adjustment for a drawer side panel thickness of 16 mm, but with full tolerance utilisation of the internal drawer width

**Drawer**

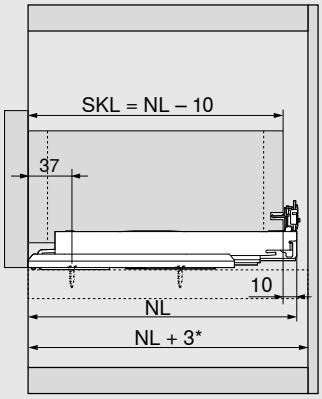


* Additional +12 mm with side stabiliser

**Inner drawer**

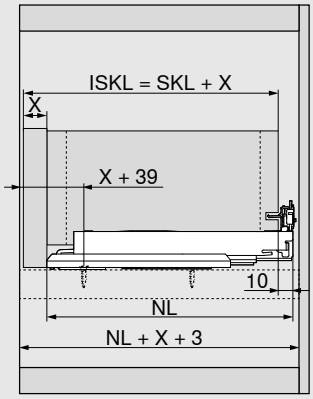


**Drawer assembly**

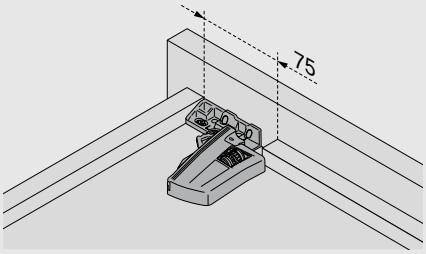


Use drilling template T65.1000.02

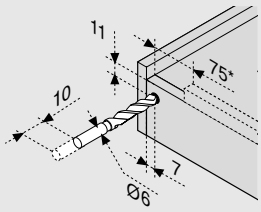


* TIP-ON BLUMOTION 125 mm

ISKL Inner drawer length
LW Internal cabinet width
NL Nominal length
SKL Drawer depth
SKW Internal drawer width
X Front thickness

## 760H – pull-out shelf – base fixing

- Concealed full extension
- Includes integrated, switchable BLUMOTION S for soft and effortless closing, and can be combined with SERVO-DRIVE or TIP-ON BLUMOTION
- Synchronised feather-light glide
- BLUMATIC self-closing feature
- Tool-free side, height and tilt adjustment
- Optional tool-free depth adjustment
- Built-in width and depth tolerance compensation
- For base fixing/fixed shelf fixing
- Cannot be combined with pull-out shelf lock

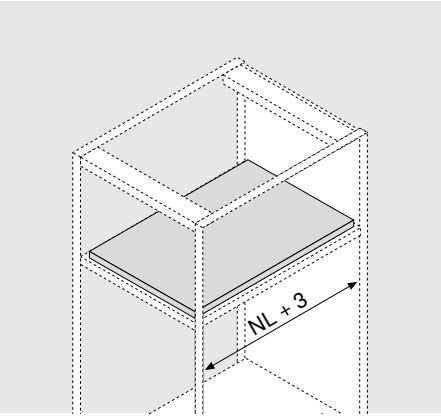


### Ordering information

| 1 | Left/right runners for base fixing | |
|---|---|---|
| 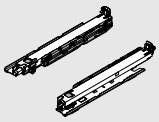 | | BLUMOTION S* |
| | **NL (mm)** | **40 kg** |
| | 350 | 760H3500SU |
| | 400 | 760H4000SU |
| | 450 | 760H4500SU |
| | 500 | 760H5000SU |
| | *Suitable for SERVO-DRIVE and TIP-ON BLUMOTION | |

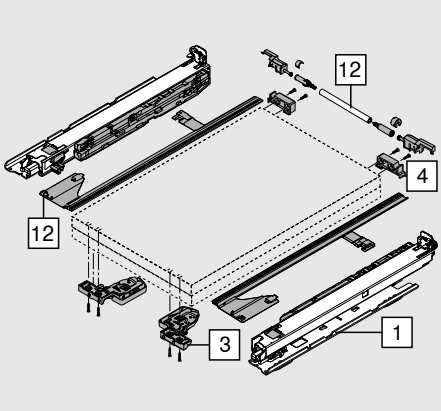


| 3 | Locking device left/right | | |
|---|---|---|---|
| | **Material** | Nylon/steel | |
| | **Colour** | Orange | |
| | Left/right must be ordered separately | | T51.7601 |

| 4 | Back fixing bracket | | |
|---|---|---|---|
| | **Material** | Nylon | |
| | **Colour** | Natural | |
| | | | T51.7000.01 |

### Accessories

| 12 | Side stabiliser set | |
|---|---|---|
| 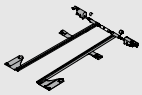 | For KB 1400 mm for cutting to size | |
| | **For NL up to (mm)** | |
| | 400 | ZS7M400MU |
| | 600 | ZS7M600MU |
| | 750 | ZS7M750MU |
| | Shaft cutting dimensions: Internal cabinet width (LW) – 315 mm | |
| | Gear rack cutting: NL + 10 mm | |

NL Nominal length

## 760H – pull-out shelf – base fixing

### Planning

**Space requirements in the cabinet**

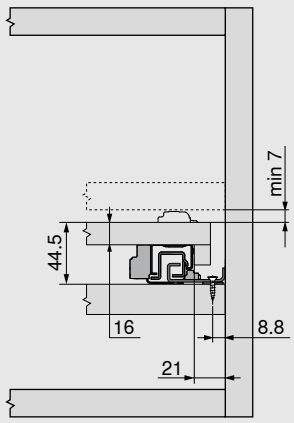


**Pull-out shelf**

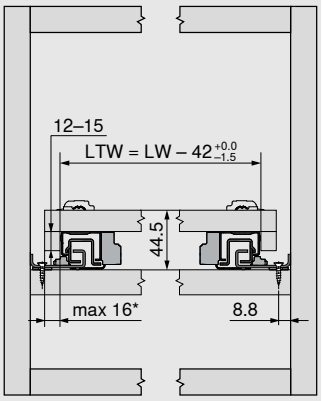


* Limited side adjustment for a side panel thickness of 16 mm on the pull-out shelf, but with full tolerance utilisation of the internal pull-out shelf width

**Pull-out shelf**

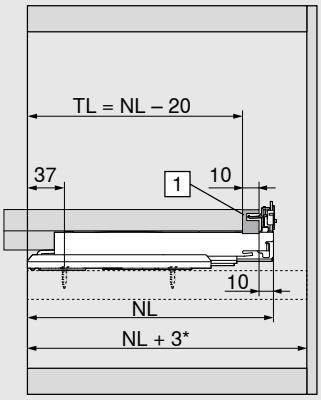


1) Back fixing bracket T51.7000.01

* Additional +12 mm with side stabiliser

**Inset pull-out shelf**

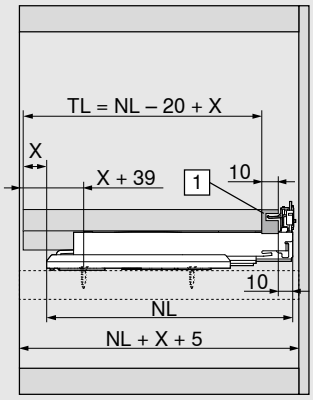


1) Back fixing bracket T51.7000.01

**Pull-out shelf assembly**

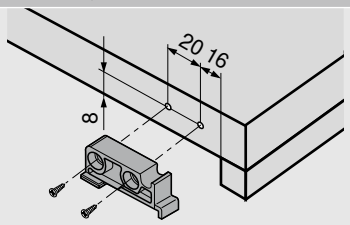


Back fixing bracket assembly

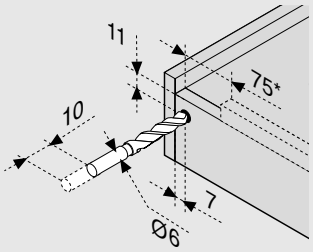


* TIP-ON BLUMOTION 125 mm

LTW Internal pull-out shelf width
LW Internal cabinet width
NL Nominal length
TL Pull-out shelf length
X pull-out shelf front piece thickness

## Accessories

| | Back fixing bracket | |
|---|---|---|
| | **Material** | Nylon |
| | **Colour** | Natural |
| | | T51.7000.01 |

| | Side stabiliser set | |
|---|---|---|
| 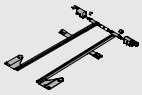 | For KB 1400 mm for cutting to size | |
| | **For NL up to (mm)** | |
| | 400 | ZS7M400MU |
| | 600 | ZS7M600MU |
| | 750 | ZS7M750MU |
| | Shaft cutting dimensions: Internal cabinet width (LW) – 315 mm | |
| | Gear rack cutting: NL + 10 mm | |

| | Pull-out shelf lock (set) | |
|---|---|---|
| 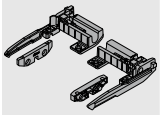 | **Material** | Nylon |
| | **Colour** | Orion grey matt |
| | **Consisting of:**<br>2x locking unit*<br>2x latching element<br>1x installation instructions | |
| | | 295H5700 |
| | Fixing with chipboard screws<br>Ø 3.5 x 15 mm, part no. 609.1500 or<br>system screws, part no. 661.1450.HG | |
| | *Fixing only possible with chipboard screws | |

| | Pull-out shelf lock – synchronisation shaft | |
|---|---|---|
| 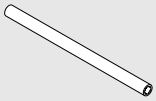 | **Material** | Aluminium |
| | **Colour** | Natural |
| | For cutting to size | ZST.1089W |
| | Optional | ZST.1160W |
| | Suitable for cabinet width up to KB 1200 mm | |
| | Cutting dimensions: LW – 87 ± 1 mm | |
| | Pull-out shelf lock can be released with one hand thanks to synchronisation | |

KB Cabinet width
LW Internal cabinet width
NL Nominal length

You can find further information on the pull-out shelf lock in EP-476 Pull-out shelf lock

## Attachment of runners – BLUMOTION S and TIP-ON

### Runner 760H – 40 kg

**NL (mm)**

NL 250–270

NL 300–320

NL 350

NL 380–480

NL 500

NL 520

NL 550

NL 600

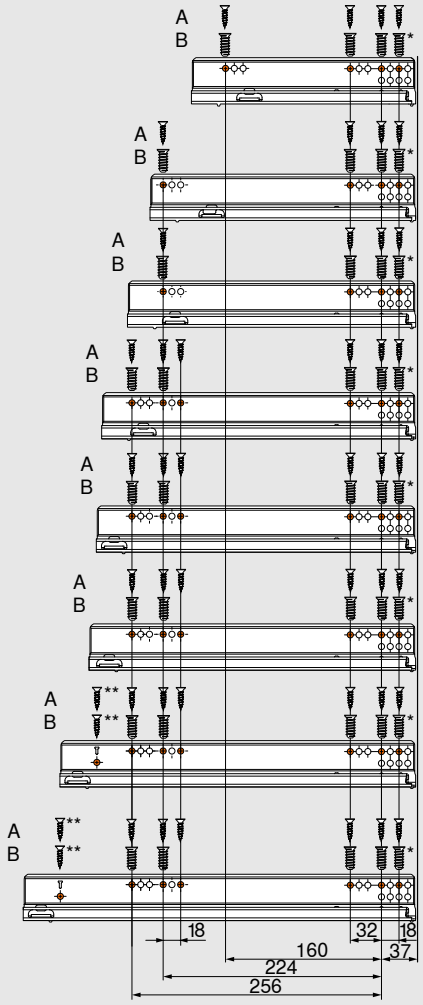


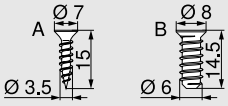


| | |
|---|---|
| A | Chipboard screw Ø 3.5 x 15 mm part no. 609.1500 |
| B | System screw Ø 6 x 14.5 mm part no. 661.1450.HG |

*Can be replaced with chipboard screw Ø 4 x 15 mm

**Rearmost fixing position ensures optimal stability.

### Runner 766H – 60/70 kg

**NL (mm)**

NL 450

NL 500

NL 520

NL 550

NL 580

NL 600

NL 650

NL 700

NL 750

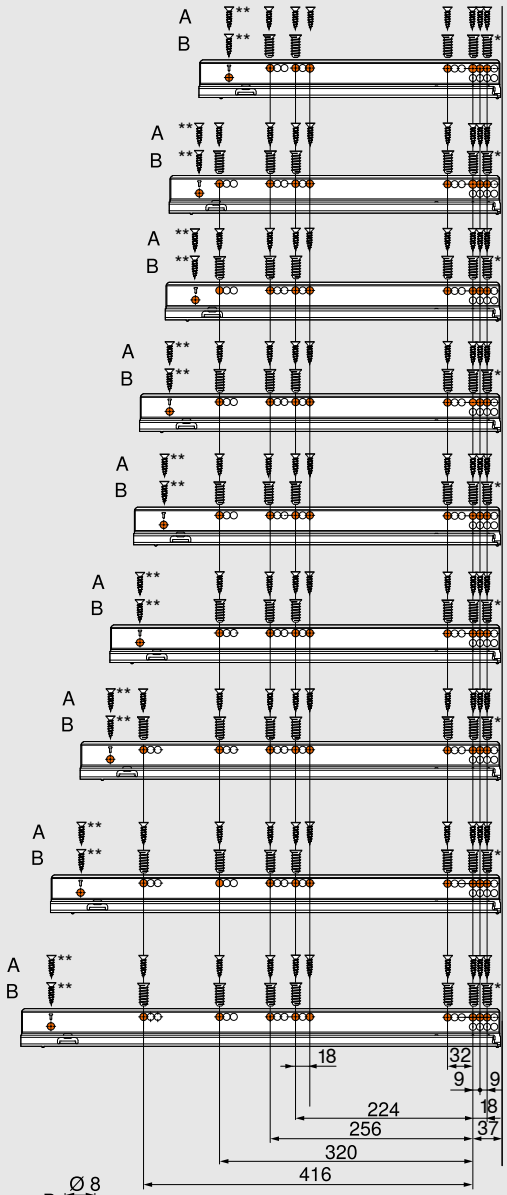


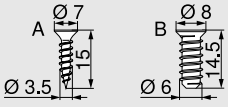


| | |
|---|---|
| A | Chipboard screw Ø 3.5 x 15 mm part no. 609.1500 |
| B | System screw Ø 6 x 14.5 mm part no. 661.1450.HG |

*Can be replaced with chipboard screw Ø 4 x 15 mm

**Rearmost fixing position ensures optimal stability.

NL Nominal length

## Attachment of runners – base fixing

**Runner – 760H – 40 kg**

**NL (mm)**

NL 350–450

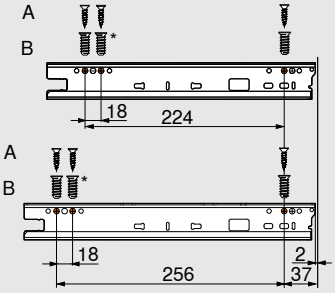


NL 500

| | |
|---|---|
| A | Chipboard screw Ø 3.5 x 15 mm part no. 609.1500 |
| B | System screw Ø 6 x 14.5 mm part no. 661.1450.HG |

*Can be replaced with chipboard screw Ø 4 x 15 mm

NL Nominal length

## TIP-ON BLUMOTION

- TIP-ON mechanical opening support system combined with BLUMOTION for soft and effortless closing
- Dynamic carrying capacity of 40 kg and 70 kg
- Synchronised feather-light glide
- Small minimum front gap of just 2.5 mm
- Extensive trigger range
- Synchronisation with internal cabinet width of 265 mm or more
- 4-dimensional front adjustment option

**Drawer/high fronted pull-out**

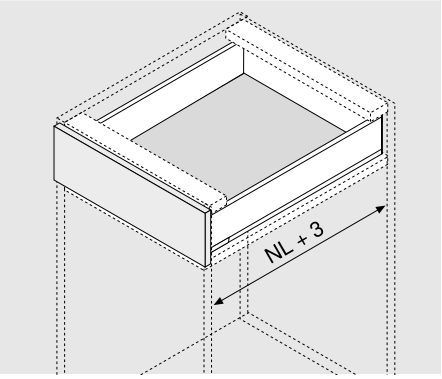


**Inner drawer/pull-out**

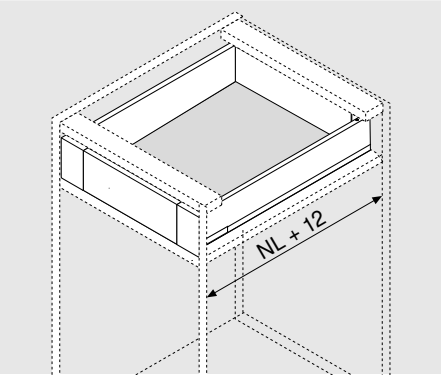


**TIP-ON BLUMOTION synchronisation**

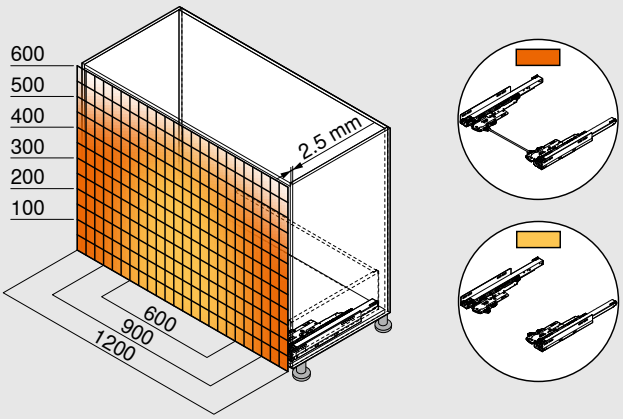


Example for 760H, nominal length NL 500 mm, four sided drawer, with and without synchronisation

An extensive trigger range is achieved even with a small minimum front gap of 2.5 mm. To achieve optimal function and to extend the trigger range, we recommend using a synchronisation linkage.

With synchronisation

Without synchronisation

LW Internal cabinet width
NL Nominal length

## TIP-ON BLUMOTION

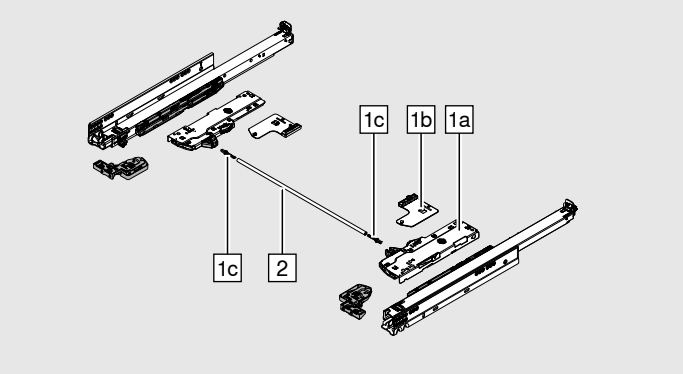


Make the right calculations for your TIP-ON BLUMOTION unit using the product configurator: **www.blum.com/configurator**

| 1 | TIP-ON BLUMOTION set | | | |
|---|---|---|---|---|
| 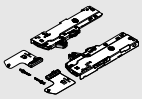 | **Consisting of:** | | | |
| | **1a** \| 2 x | TIP-ON BLUMOTION unit | | |
| | **1b** \| 2 x | TIP-ON BLUMOTION latch | | |
| | **1c** \| 2 x | synchronisation adapter | | |
| | **NL (mm)** | **Unit** | **Weight (kg)*** | |
| | 270–320 | S0 | ≤ 10 | **T60L7040** |
| | | S1 | > 10–20 | **T60L7140** |
| | 350–750 | L1** | ≤ 20 | **T60L7340** |
| | | L3 | 15–40 | **T60L7540** |
| | | L5*** | 35–70 | **T60L7570** |

| 2 | TIP-ON BLUMOTION synchronisation linkage | |
|---|---|---|
| | Possible for LW ≥ 314 mm | |
| | Suitable for LW up to 1370 mm | |
| | | **T60.1125W** |
| | Shaft cutting: LW - 267 mm | |

To optimise the function and trigger range, we generally recommend using synchronisation.

| For short LWs (alternative to 2) | | |
|---|---|---|
| | **TIP-ON BLUMOTION one-part synchronisation** | |
| | Symmetrical | |
| | LW 265–313 mm | **T60.300D** |
| | Cutting: LW - 241 mm | |

### Accessories

| TIP-ON BLUMOTION synchronisation adapter | | |
|---|---|---|
| | Symmetrical | |
| | When used with **2**, two pieces required each time | |
| | LW ≥ 314 mm | **T60.000D** |

| TIP-ON BLUMOTION front gap template | | |
|---|---|---|
| | For adjusting the front gap to 2.5 mm on both sides | |
| | | **65.5631** |
| | Use of the front gap template is recommended! | |

LW Internal cabinet width
NL Nominal length

* Recommended weight ranges (total weight of pull-out) for optimum opening and closing function
** Can only be combined with 40 kg runner (760H)
*** Can only be combined with 60/70 kg runner (766H)

## TIP-ON BLUMOTION

### Planning

**Furniture construction**

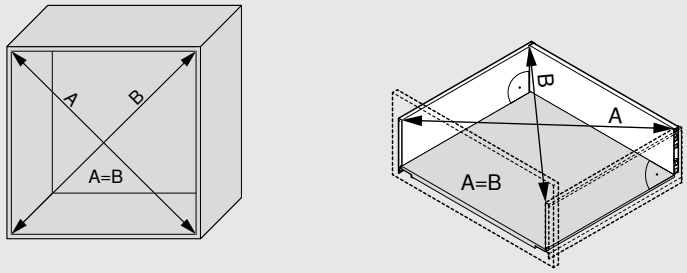


Precise manufacturing is required to ensure a front gap of at least 2.5 mm. This means that the construction must adhere to the dimensions and angles planned.

**Depth position**

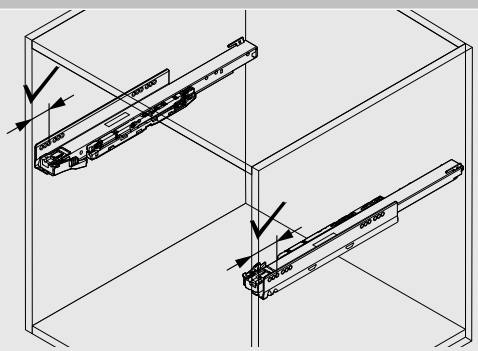

Ensure that both runners are positioned at the correct depth.

**Front assembly**

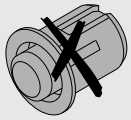

Bumpers must not be installed for TIP-ON BLUMOTION!

**Space requirements in the cabinet**

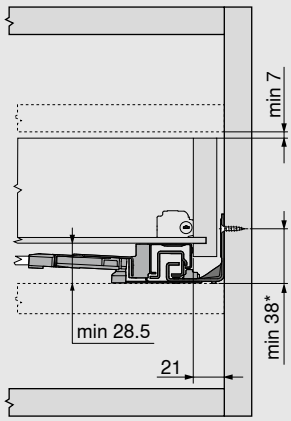


* + 1 mm for assembly of the runners prior to cabinet assembly

**Drawer/ inner drawer**

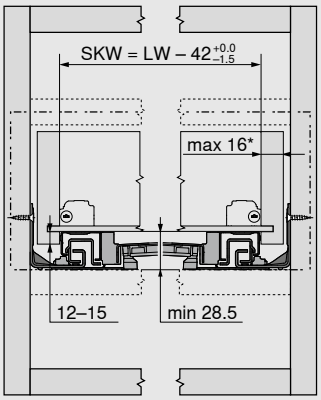


* Limited side adjustment for a drawer side panel thickness of 16 mm, but with full tolerance utilisation of the internal drawer width

**Drawer**

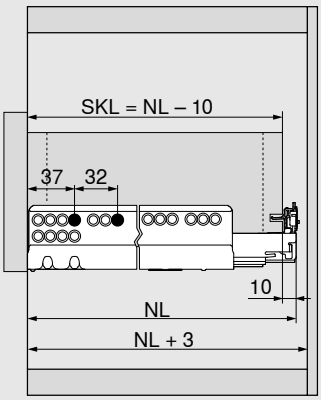


**Inner drawer**

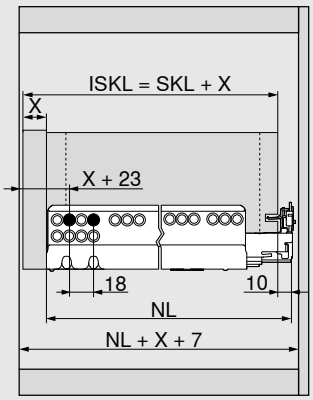


ISKL Inner drawer length
LW Internal cabinet width
NL Nominal length
SKL Drawer depth
SKW Internal drawer width
X Front thickness

## TIP-ON synchronisation

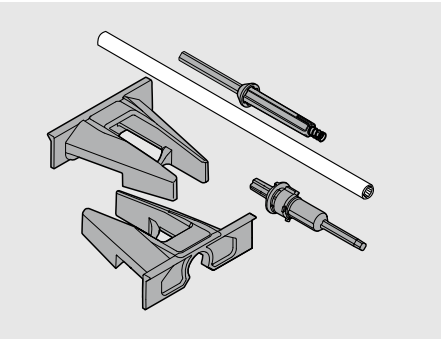

- Synchronisation for secure opening and closing for MOVENTO with TIP-ON
- To enlarge the trigger range on the pull-out front
- Recommended for cabinet widths of 600 mm or more
- Front gap 3.5 mm

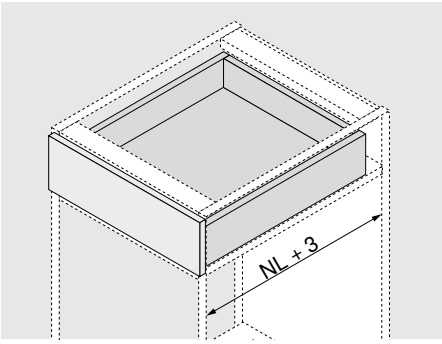


## TIP-ON synchronisation

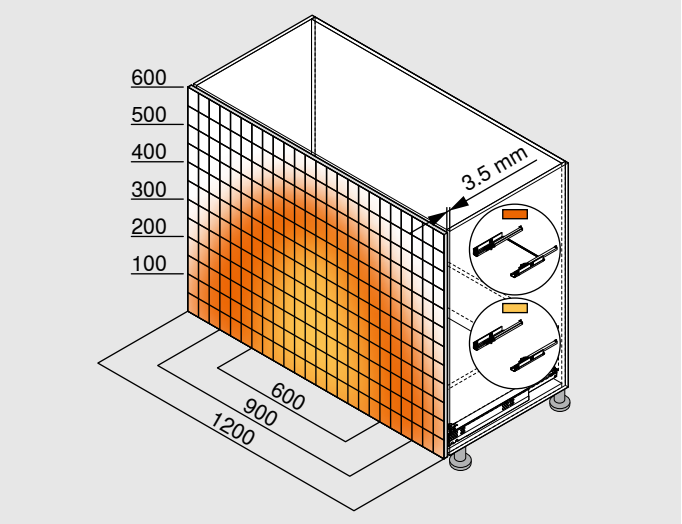


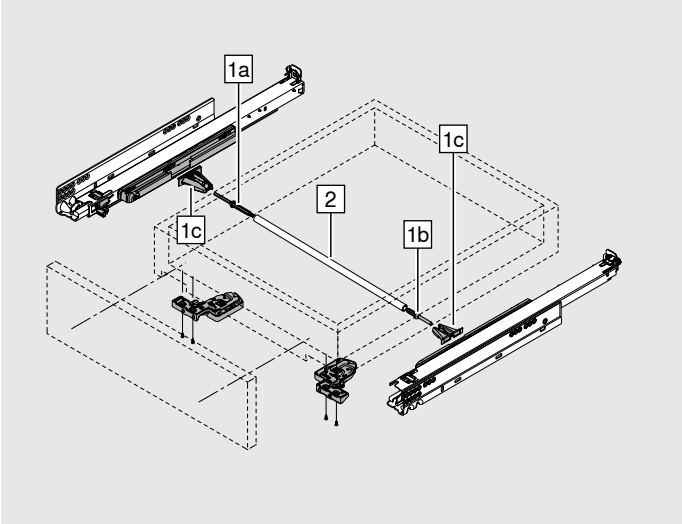


## Order specification

| 1 | TIP-ON synchronisation pinion set | |
|---|---|---|
| 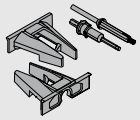 | **Consisting of:**<br>**1a** \| 1 x locking device<br>**1b** \| 1 x overload locking device<br>**1c** \| 2 x attachments | |
| | **Colour** | RAL 7037 dust grey |
| | **Version** | Round |
| | | **T57.7400.01** |

| 2 | TIP-ON synchronisation linkage | |
|---|---|---|
| 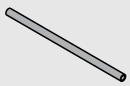 | **Material** | Aluminium |
| | **Version** | Round |
| | For cutting to size, 1160 mm | **ZST.1160W** |
| | Shaft cutting: LW - 249 mm | |

LW Internal cabinet width
NL Nominal length
KB Cabinet width

**Assembly, adjustment and removal**
www.blum.com/movento1

Look for our FSC™-certified products

FSC
www.fsc.org
FSC™ C115115

All content is copyrighted by Blum.
Subject to technical modifications and changes to the range without notice.
IDNR: 960.994.1 · EP-542/2 EN-MY/01.23

Blum Malaysia
A-2-3 & A-2-3A
Aurora Place Mall @ Bukit Jalil
Jalan Persiaran Jalil 1
Bandar Bukit Jalil
57000 KUALA LUMPUR
MALAYSIA
E-Mail: info.my@blum.com
www.blum.com

Julius Blum GmbH
Furniture Fittings Mfg.
6973 Höchst, Austria
Tel.: +43 5578 705-0
Fax: +43 5578 705-44
E-mail: info@blum.com
www.blum.com

Our sites in Austria, Poland and China are certified to the international standards mentioned below.
Our site in the USA is certified to ISO 9001.
Our site in Brazil is certified to ISO 9001, ISO 14001 and ISO 45001.

ISO 9001 Certified Quality System
ISO 14001 Certified Environmental System
ISO 50001 Certified Energy System

blum®