# M35.X200.01 – Base router

## Safety, set-up, operating and maintenance instructions

EN

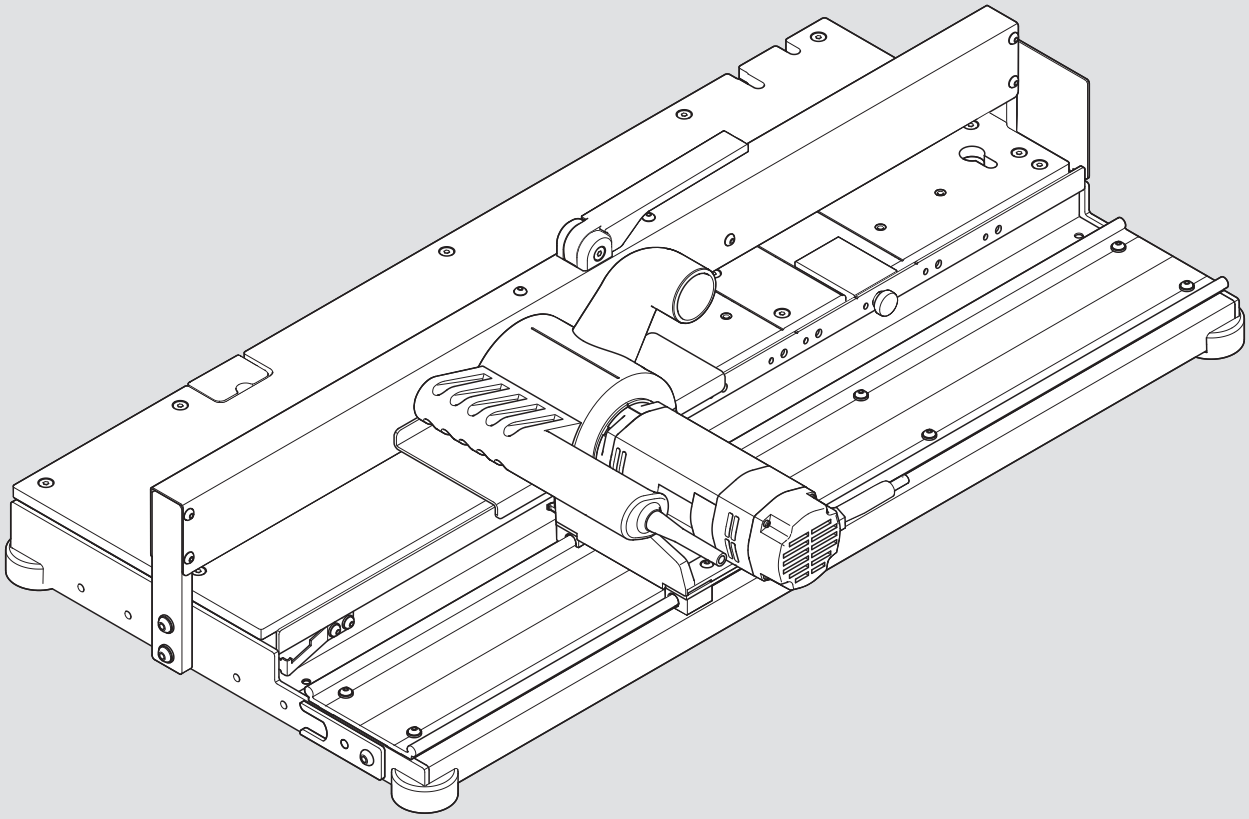

Ensure that the instructions have been fully read and understood before operating the base router. Only appropriately trained and authorised personnel may operate the base router.

## Table of contents


**3** A – Safety
- **3** Intended use
- **4** Warning signs
- **5** Position of warning signs

**7** B – Reference diagrams

**10** C – Set-up and start-up
- **11** Attaching to the work area
- **13** Connecting the extraction system
- **13** Connecting the power supply

**14** D – Information about milling
- **14** Milling with depth stop
- **14** Milling with timber stop

**18** E – Processable products, required accessories, work steps
- **18** Panel thickness 15 to 16 mm
- **20** Panel thickness 17, 18, 19 mm

**22** F – Set-up
- **22** Stop bar
- **23** Support stop
- **25** Depth stop
- **25** Timber stop
- **25** Support

**26** G – Clamping the workpiece
- **26** Clamping the drawer base
- **27** Clamping the back

**29** H – Milling the workpiece
- **29** Milling the drawer base
- **31** Milling the back

**33** I – Maintenance
- **33** Everyday cleaning
- **34** Removing and installing the motor
- **36** Cleaning the housing
- **36** Removing and installing the cutter
- **38** Changing the cutting inserts

**42** J – Troubleshooting

**43** K – Spare parts

**44** L – Scope of delivery

**45** M – Conformity
- **45** Technical data

## A – Safety

**Handling**

➢ Please read the instruction leaflet and the safety information before starting up the base router.

➢ We recommend that you use the reference diagram for easier identification of the parts being described.

**Safety principle**

The base router conforms to current safety standards. Nevertheless, certain risk factors will remain if the information contained in this instruction leaflet is not observed.

**Residual risk according to EN ISO 12100:2010**

- The base router is equipped with all the necessary protection features.
- However, some risk factors will remain for the user, particularly when removing the protective equipment or when control units fail.
- Other risks are identified by warning signs and safety information. It is therefore necessary to observe the safety information.

**Intended use**

The base router is only intended to process drawer bases for the Blum LEGRABOX and TANDEMBOX. The base router may only be used under the following conditions:

- The base router may only be operated by fully trained personnel.
- The base router is designed for professional traders.
- Only particle board and medium-density fibreboard (MDF) may be used as materials.
- The device should only be installed in dry, enclosed rooms.
- Only for drawer bases with a thickness of 15–19 mm. (depending on device type)
- Only original Blum tools may be used.
- No liability can be accepted for any other use.

**Foreseeable misuse**

No solid wood or hard wood or plastic may be processed.

**Responsibilities**

The operator

- must ensure that the base router is only operated and maintained by sufficiently trained staff, who have read and understood the instruction leaflet and, most importantly, the safety section
- is responsible for ensuring that the base router is kept in a safe operating state
- will stop using the base router immediately when faults occur which jeopardise safety.

**Risk levels**

**WARNING**

- WARNING indicates a danger that could lead to serious injury if not avoided.

**CAUTION**

- CAUTION indicates a danger that could lead to injury if not avoided.

**NOTE**

- The NOTE sign indicates information that should be observed.

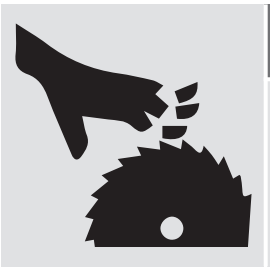

**WARNING**

**Serious cuts.**
**Failure to heed this warning may result in personal injury.**

➢ Only push the slide by the handle.

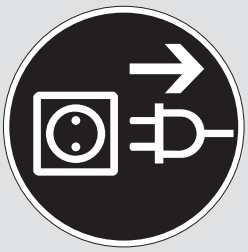

**WARNING**

**Serious cuts.**
**Failure to heed this warning may result in personal injury.**

➢ The base router must be disconnected from the power supply before set-up, cleaning and maintenance.

➢ The base router is only intended for use by **one** person.
➢ Only attach the base router to a sufficiently stable table.
➢ Ensure there is sufficient lighting.
➢ Only operate the base router with the extraction system switched on.
➢ Before starting work, you should check that the protection devices and mechanical parts are functioning properly. Any damaged parts should be replaced by original parts from Blum.
➢ Do not make any changes or alterations to the base router.
➢ For your own safety, use only those accessories which are recommended or specified in the instruction leaflet or Blum sales catalogue.
➢ Check the electrical cable for damage.

- ➢ Ensure that the average air velocity for the extraction system is at least 20 m/sec.
- ➢ The negative pressure in the extraction system must be 250–300 mbar.
- ➢ Failure to observe the instructions and warnings given for this base router may result in serious injury.
- ➢ The instruction leaflet should be accessible at all times.
- ➢ When the rocker switch is released, the milling cutter continues to run for a time. Wait for the milling cutter to come to a standstill under all circumstances.

**Warning signs**

Before connecting the base router to the power supply, you must ensure that you have understood ALL the safety instructions, warning signs and the instruction leaflet.

Keep non-authorised persons
away from the base router.

No more than one person may use the base router at a time.

Always wear eye protection when operating this machine.

Wear proper ear protection when operating this machine.

Danger of crushing!

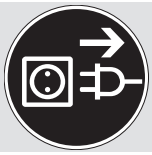

The base router must be disconnected from the power supply before cleaning and maintenance.

Serious cuts.

**Position of warning signs**

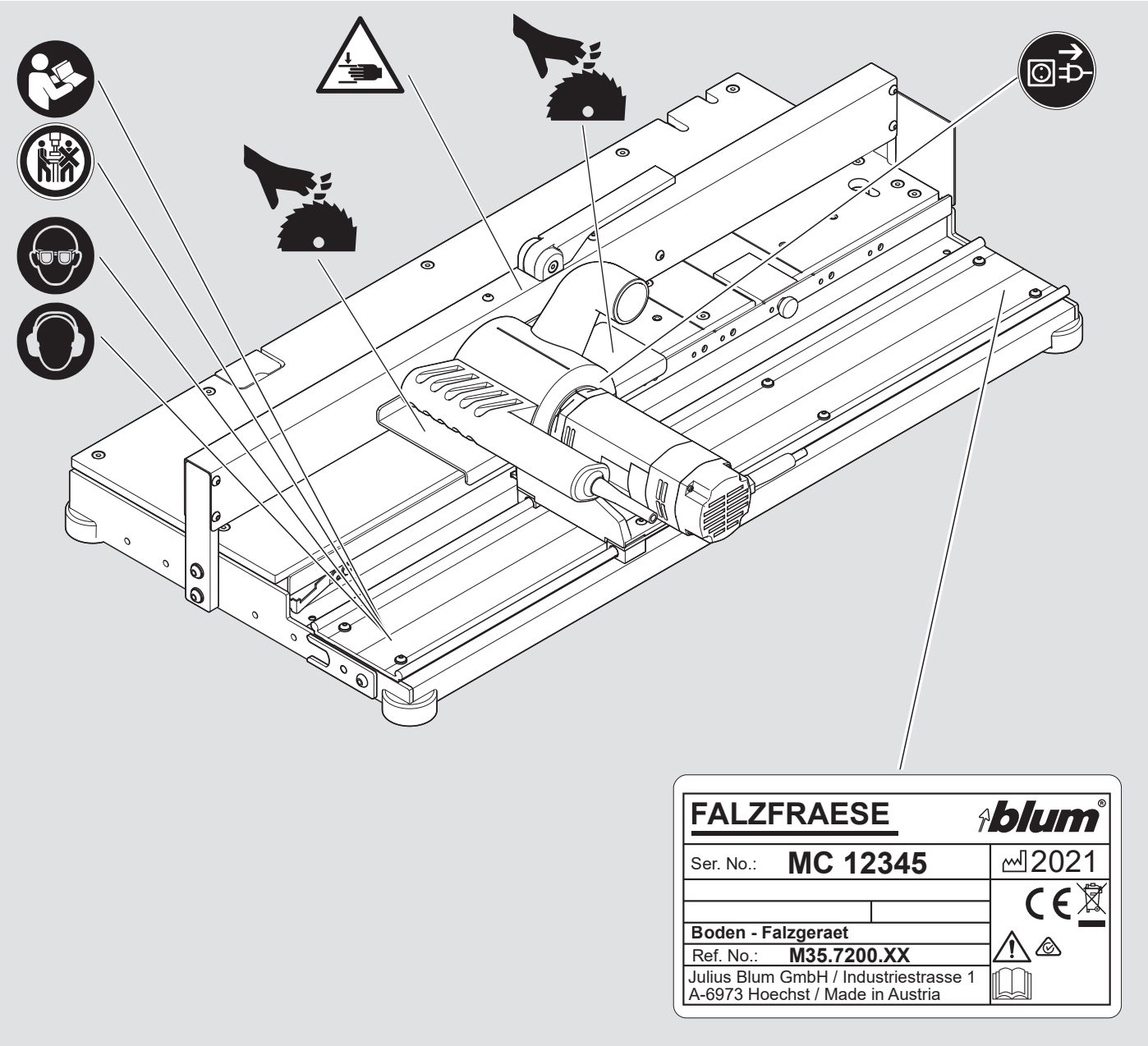

## B – Reference diagrams

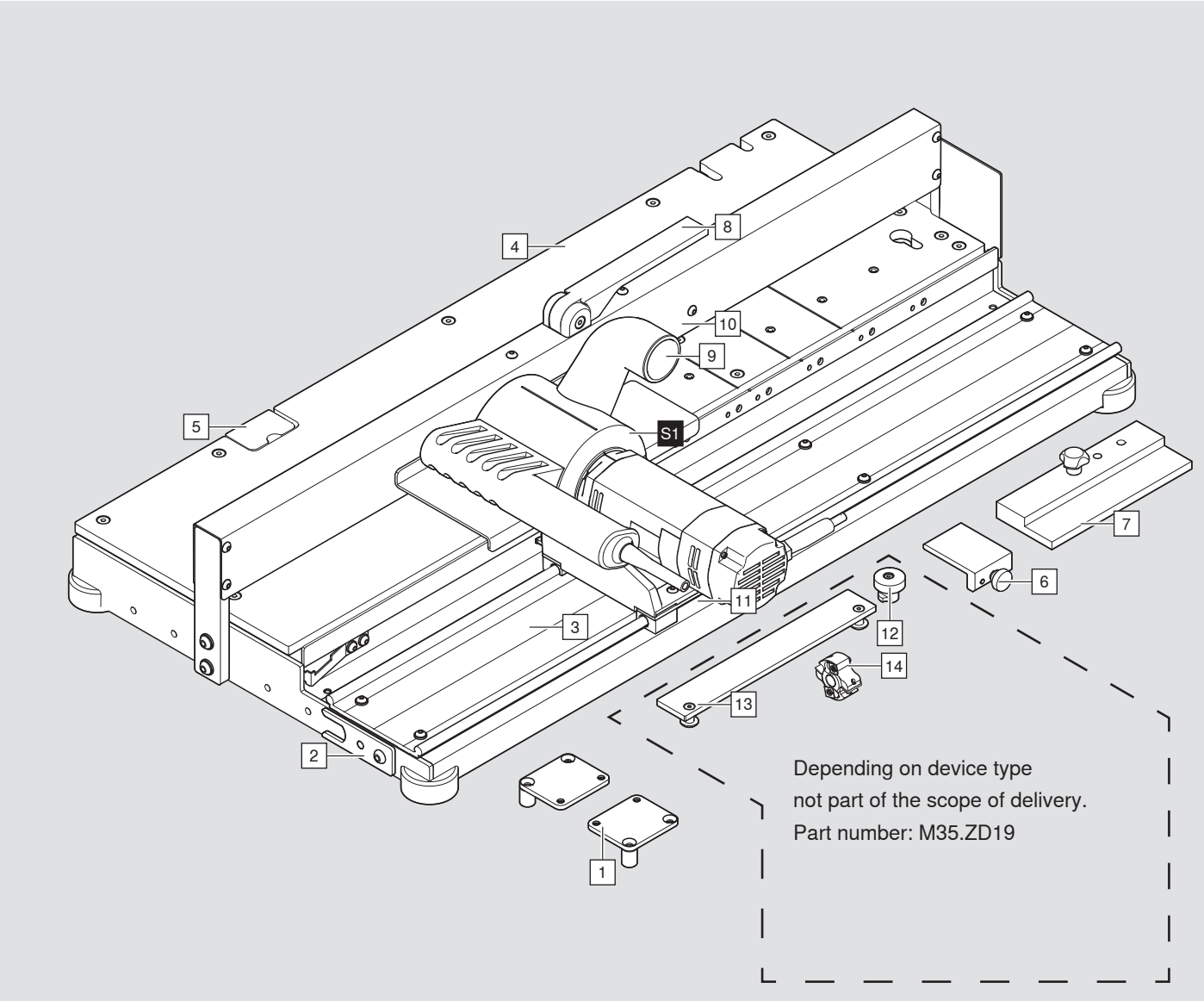


1 Fixing board (delivered loose)

2 Shaft holder
3 Runner
4 Work top
5 Support
6 Depth stop
7 Timber stop
8 Clamping lever
9 Extraction socket
10 Clamping plate
11 Transportation lock
S1 Slide

12 Support stop
13 Stop bar
14 Cutter DM 44

**Reference diagram for slide**

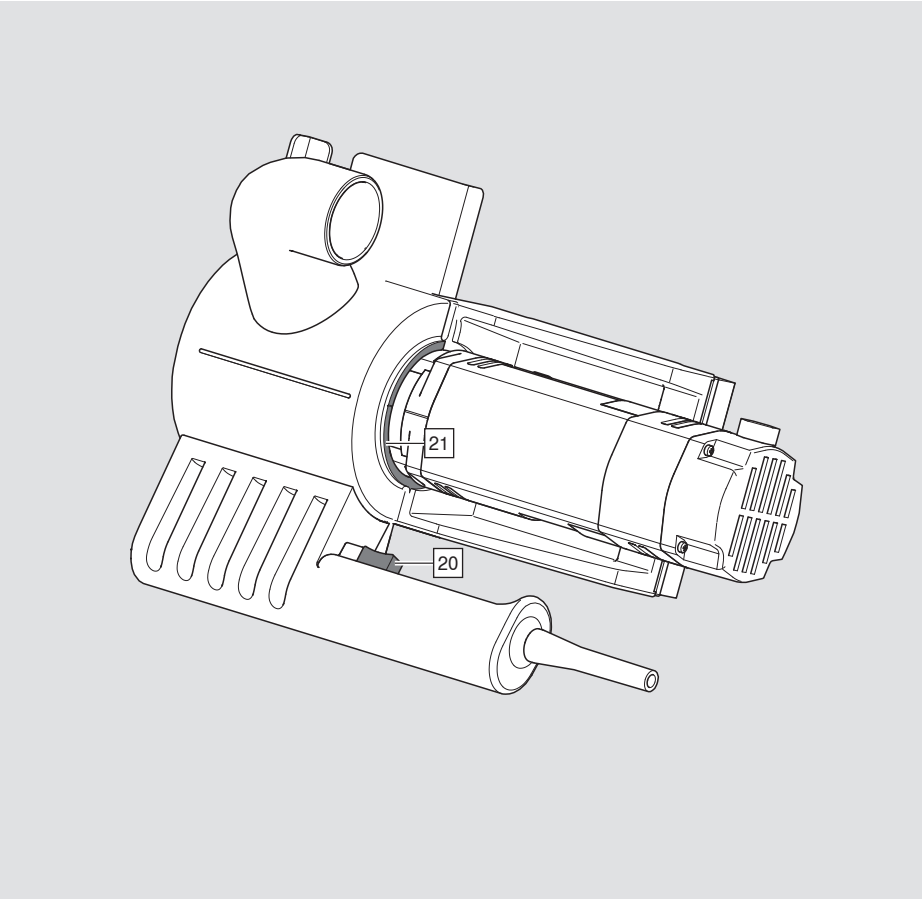


20 Rocker switch
21 Flange surface

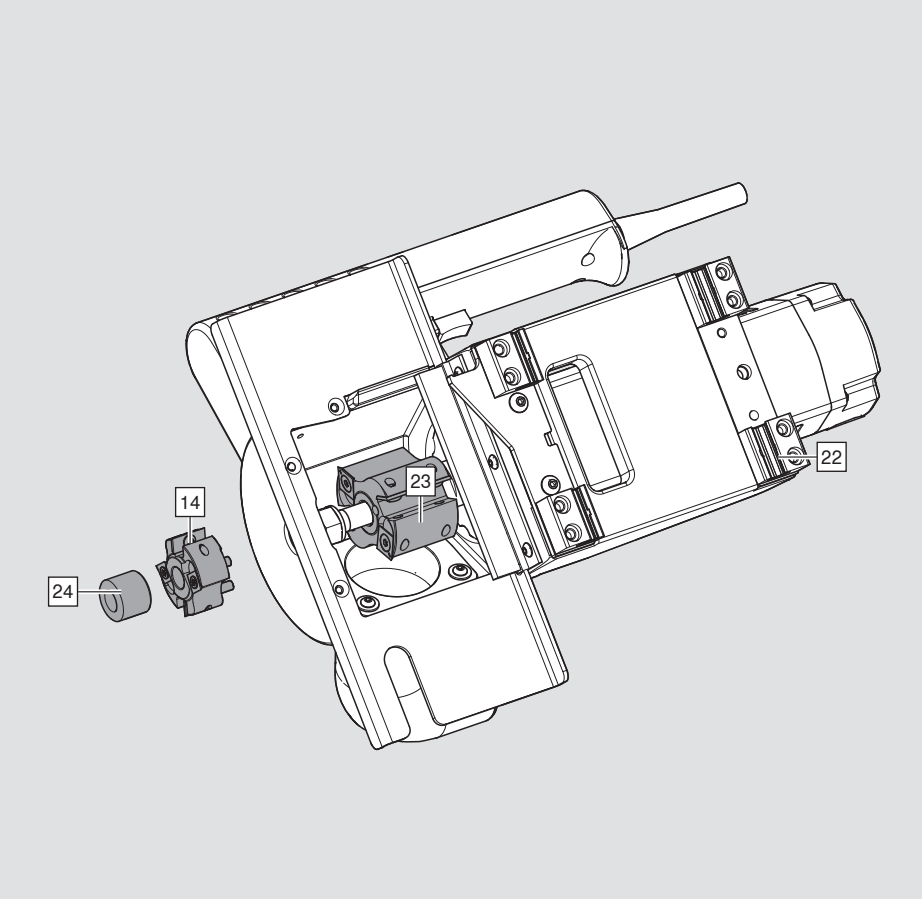


22 Sliding film
23 Notch cutter
24 Spacer sleeve
14 Cutter DM 44

## Operating elements

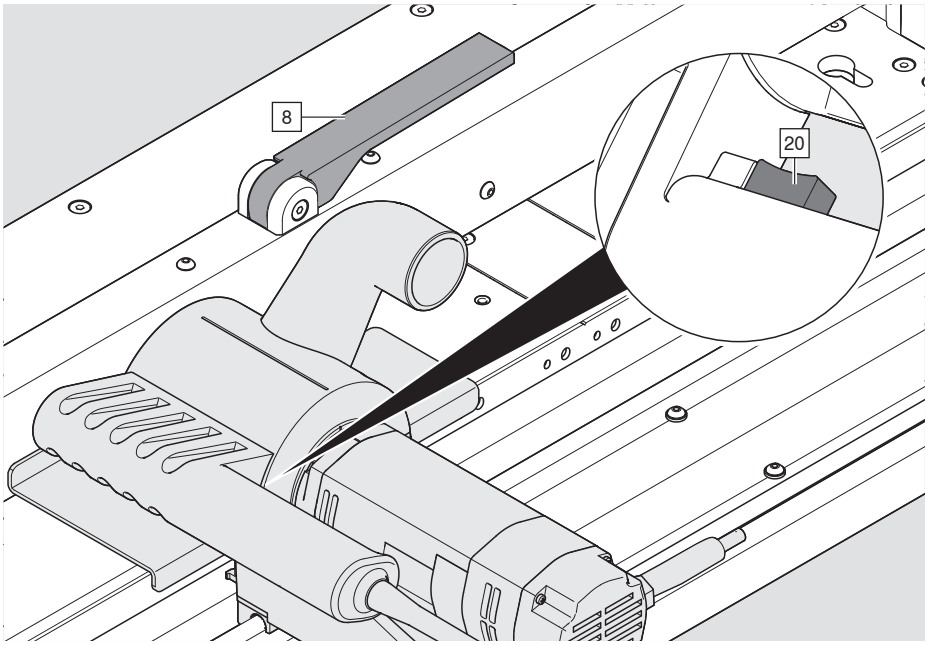


8 Clamping lever
Press down the clamping lever [8] to secure the workpiece.

20 Rocker switch
The rocker switch [20] is used to switch the base router off and on.
Non-stop operation is not possible.

When the rocker switch is released, the milling cutter continues to run for a time.
Wait for the milling cutter to come to a standstill under all circumstances.

In the event of overheating due to overload, the motor will be switched off by the temperature monitoring. After a cooling phase the motor can be operated again.

## C – Set-up and start-up

### Dimensions and weight

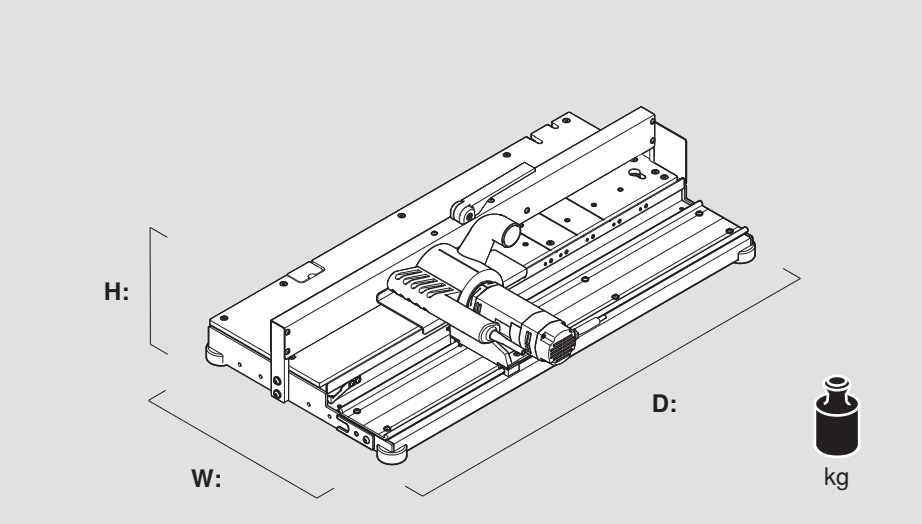


| | |
|---|---|
| Height (H): | 250 mm |
| Width (W): | 580 mm |
| Depth (D): | 990 mm |
| Weight: | 29 kg |

➢ Only use in dry, enclosed rooms.
➢ Ensure there is sufficient lighting.

### Requirements for the work area

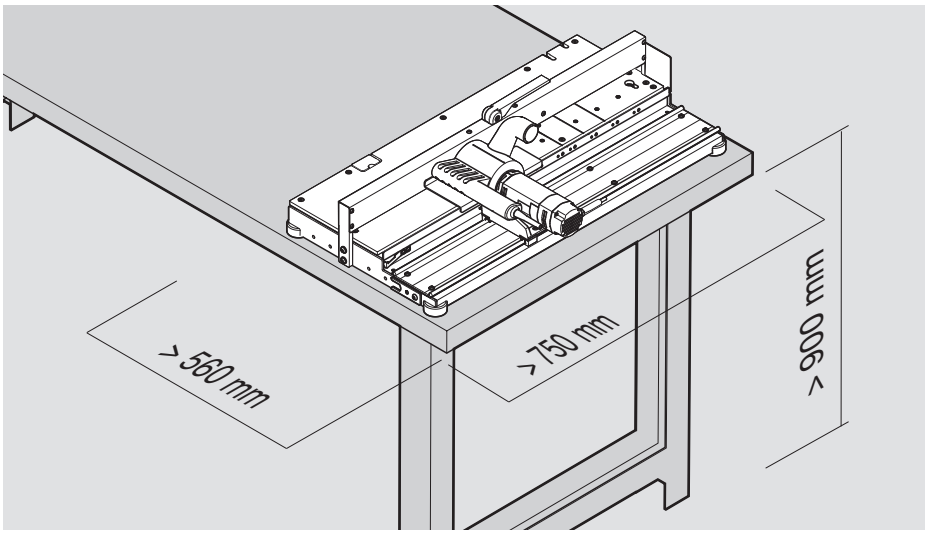


**WARNING**

**The base router weighs 29 kg.**
**Failure to observe this information may result in personal injury.**
➢ The base router must be lifted by two persons.

➢ A table height of more than 900 mm is recommended.
➢ The specified width, depth and height are minimum dimensions.
➢ The base router must only be used on a stable work top.

**WARNING**

**The base router must be securely connected to the workbench.**
**Failure to heed this warning may result in personal injury and material damage.**

The following fixing methods are intended for the base router:

- fixed attachment to the work top
- removable attachment to the worktop

**Fixed attachment to worktop**

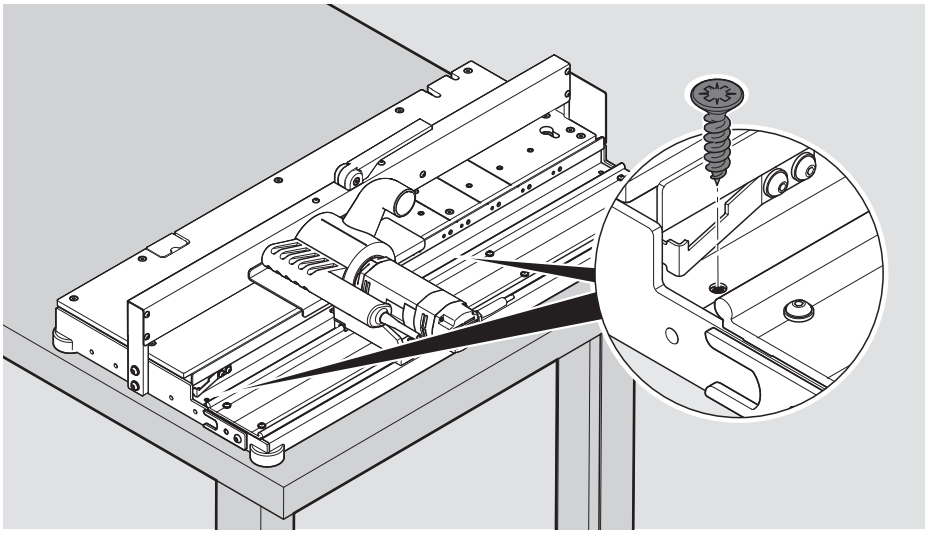

➢ Screw the base router to the work top.

**Removable attachment to worktop**

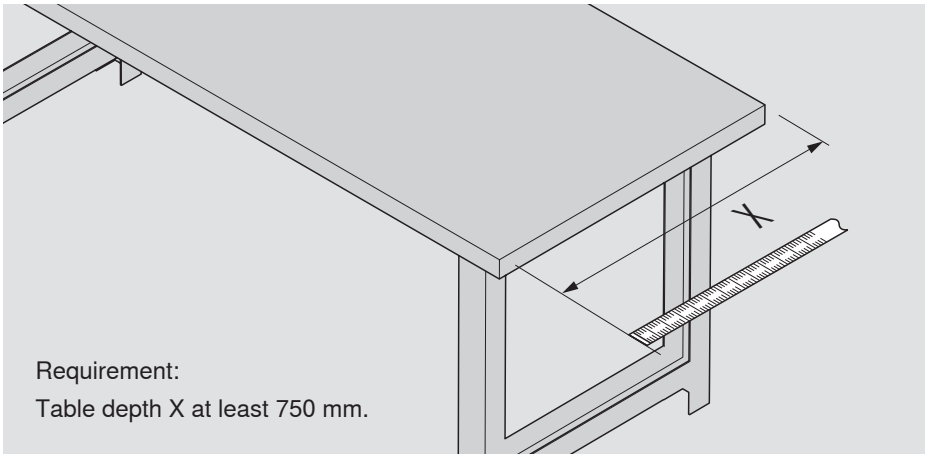


➢ Measure the depth X of the workbench.

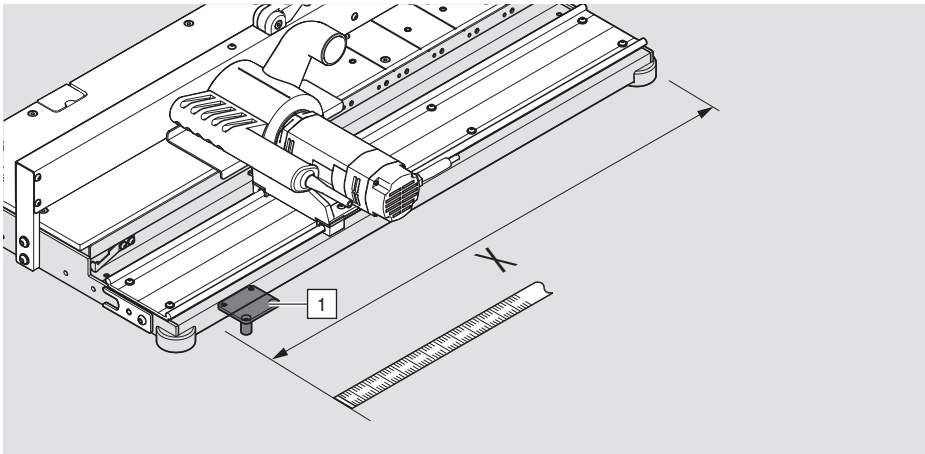


➢ Position the fixing board [1] within the table length and screw to the frame.

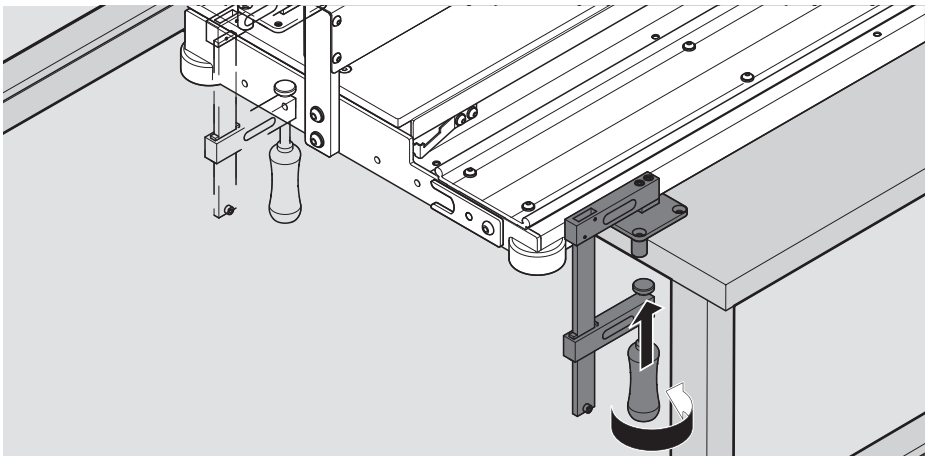

➢ Secure the base router to the work top with fixing boards [1] and screw clamps.

**Removing the transportation lock**

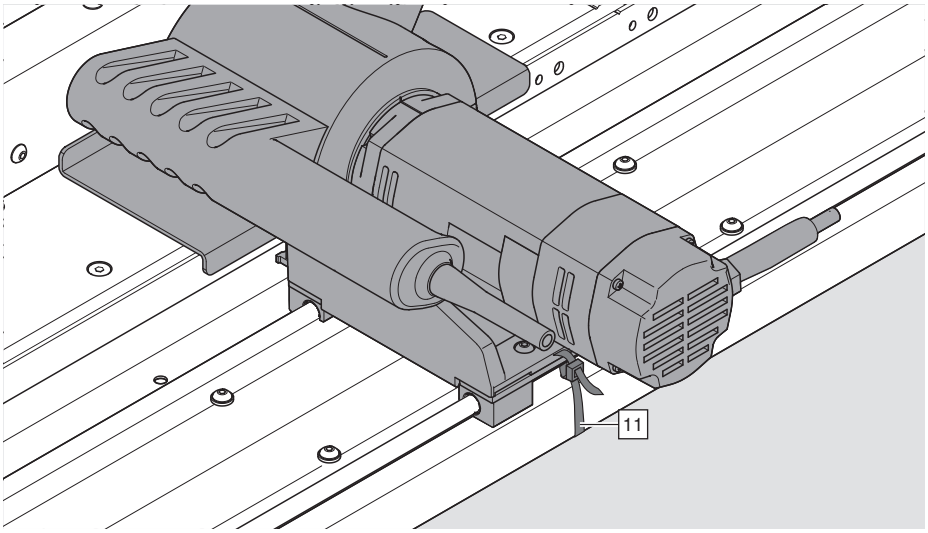


The slide of the base router is secured for transport.

➢ Remove the transportation lock [11].

**Connecting the extraction system**

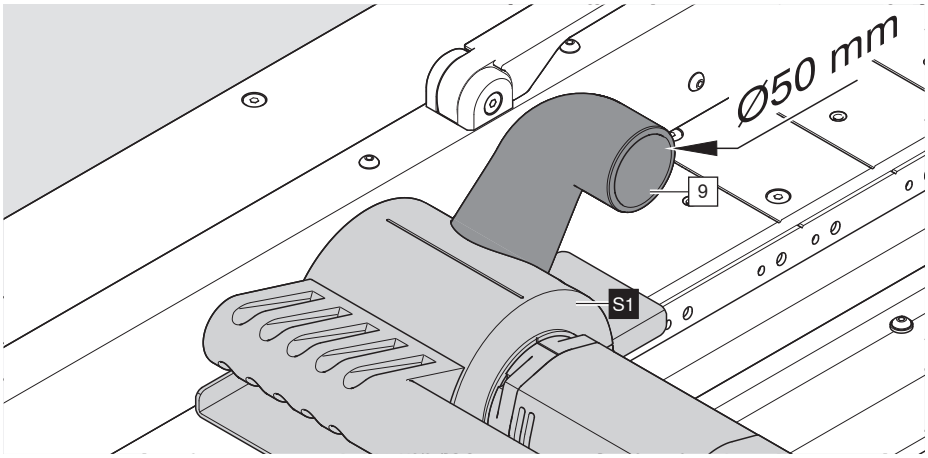


➢ Insert an extraction hose with an inner diameter of 50 mm into the extraction socket [9] and secure it.Extraction socket [9] outer diameter 50 mm.

➢ Ensure that the average air velocity for the extraction system is at least 20 m/sec.

➢ The negative pressure must be 250–300 mbar.

➢ Move the slide [S1] across the full length.
Check that the cable and hose can move freely.
Avoid tensioning or scraping the cable and hose.

**Connecting the power supply**

➢ Insert the plug.
The base router is designed for 230–240 V 50/60 Hz.

**i NOTE**

- The outlet must be fitted with a PE protective contact.
- The outlet must have a 16 A fuse.
- After finishing work, disconnect the base router from the power supply.
- Avoid overloading the outlet.
- Do not use the base router together with an extension lead or cable drum.
- Use a separately protected outlet for the extraction system and base router.

## D – Information about milling

**Milling with depth stop [6] for uncoated workpieces**

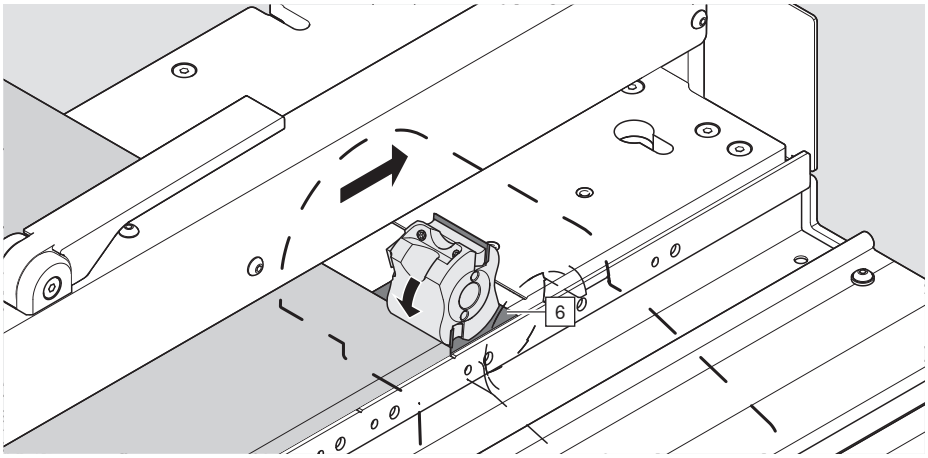


The depth stop [6] is used to position the workpiece.
For workpieces with edge bands and for backs, we recommend using the timber stop [7].

**Milling with timber stop [7] for coated workpieces**

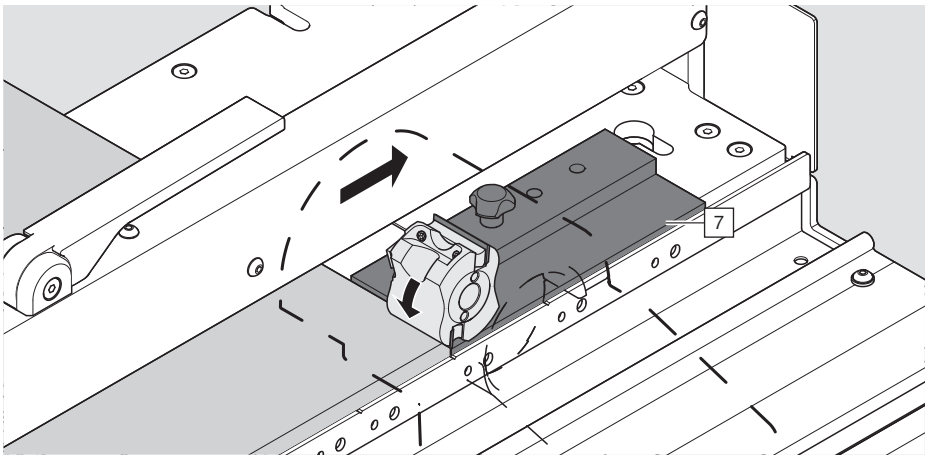


The timber stop [7] prevents torn edges and edge bands. When processing backs, the use of the timber stop [7] is strongly recommended.
The timber stop [7] is designed for small processing quantities and must therefore frequently be replaced.

**i NOTE**

- The timber stop [7] is included loose.
- Spare part – part number: M35.ZT01 (10 pieces)

**Timber stop drawing [7]**

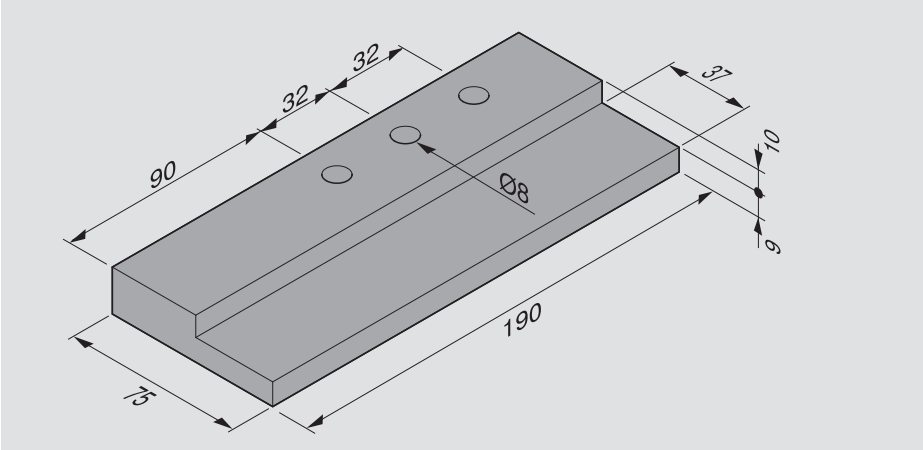


**NOTE**

- For in-house production, the timber stop [7] must be pre-notched.
  This will significantly improve the result of the processed workpiece.

**Replacing the timber stop [7]**

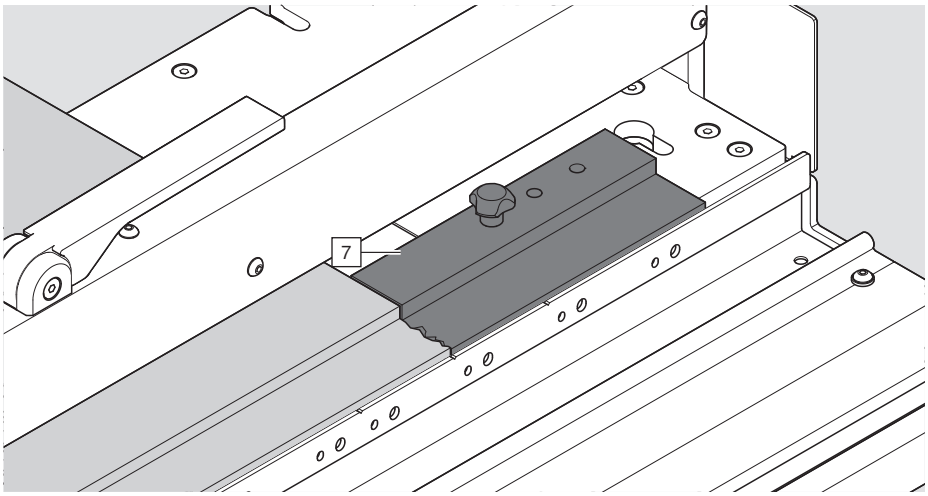


The timber stop [7] becomes worn through frequent milling. This can lead to torn edges on the workpiece. To avoid this, the timber stop [7] must be reworked, if necessary.

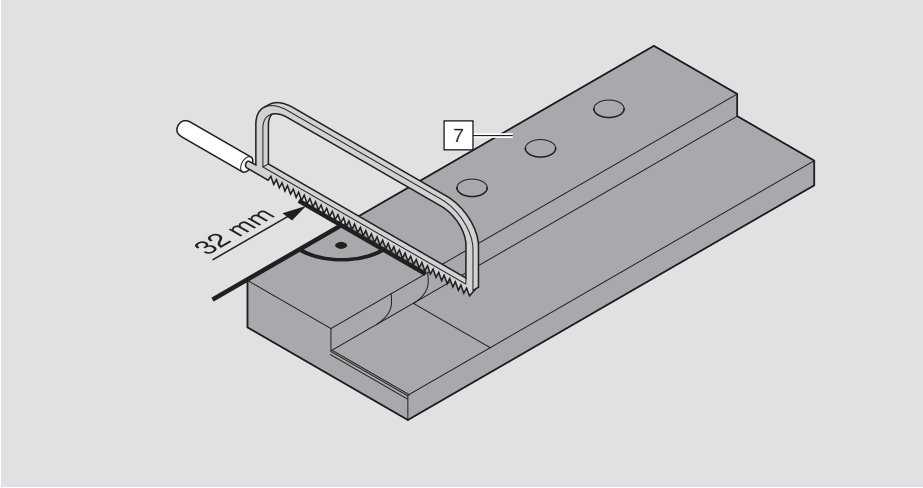


➢ Shorten the timber stop [7] by 32 mm.

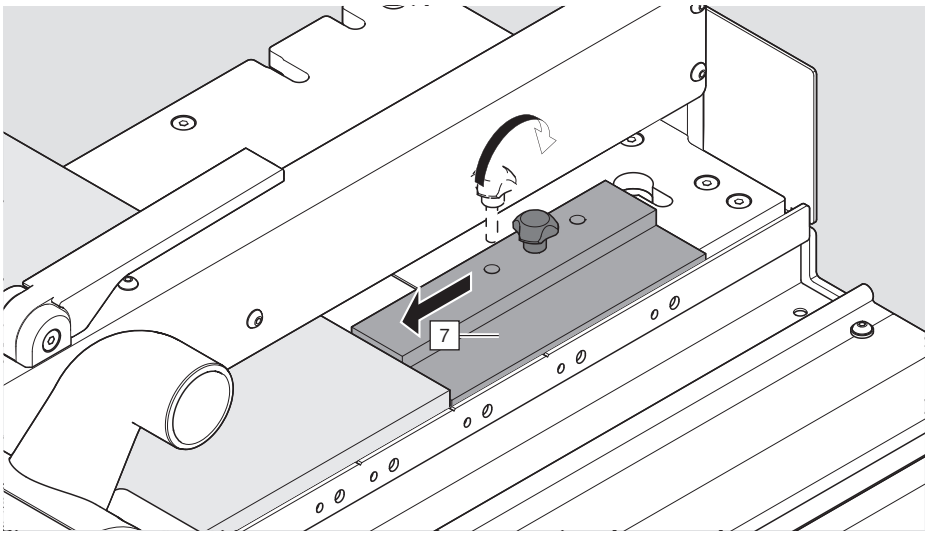


➢ Reposition the timber stop [7] using the next through-hole.
➢ The timber stop [7] can be reworked twice.

## E – Processable products, required accessories, work steps

Panel thickness

**15 – 16 mm**

LEGRABOX

| Selecting | | Set-up | |
|---|---|---|---|
| **Drawer base [30]** | Notch | Cutter fittings | |

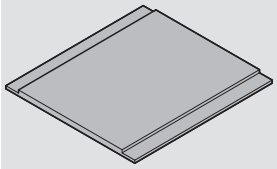

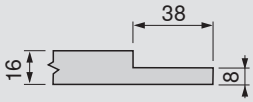


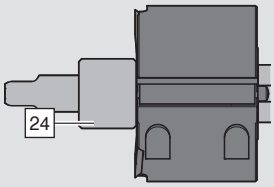

**In scope of delivery**

**NOTE**

- The cutter M35.ZF44.03 should not be used in the processing of panel thicknesses up to 16 mm.
  The spacer sleeve [24] must be mounted in place of the cutter.
- For the product TANDEMBOX, no further processing is necessary for panel thicknesses up to 16 mm.

| Set-up | | | | Processing |
|---|---|---|---|---|
| | Depth stop [6] | Timber stop [7] | Support [5] | |
| | 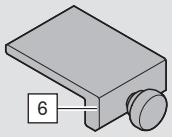 25 | 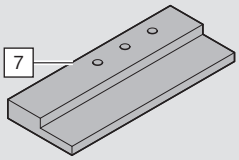 25 | 25 | Clamp workpiece 26 |
| | **M35.0035.01** | **M35.ZT01** | | Mill workpiece 29 |

Panel thickness

# >16 – 19 mm

For restrictions for Blum products with panel thickness greater than 16 and up to 19 mm – see page 46:

## LEGRABOX

| Selecting | | Set-up | |
|---|---|---|---|
| **Back [31]** | Notch | Cutter fittings | Stop bar [13] |
| 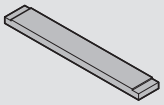 | 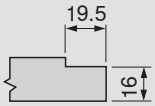  | 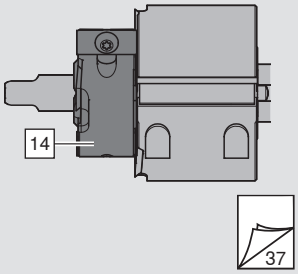  | 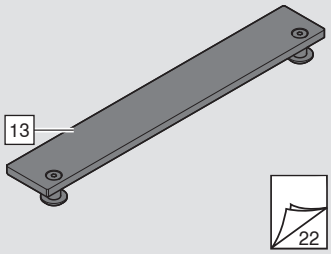  |
| | | **M35.ZD19** | |
| **Drawer base [30]** | | | |
| 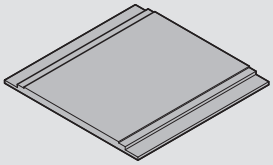 | 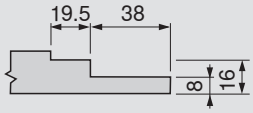  | 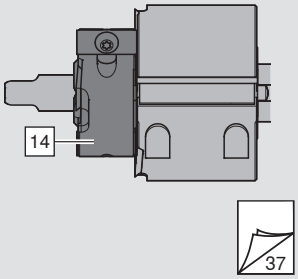  | |
| | | **M35.ZD19** | |

## TANDEMBOX

| Selecting | | Set-up | |
|---|---|---|---|
| **Back [31]** | Notch | Cutter fittings | Stop bar [13] |
| 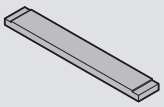 | 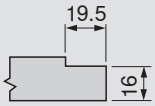  | 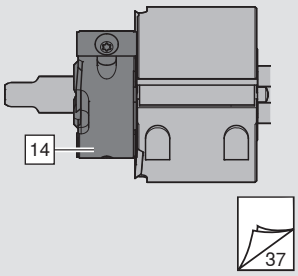  | 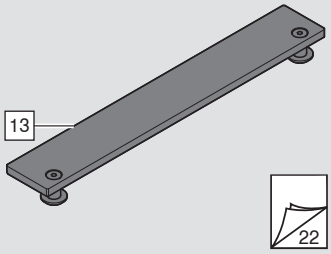  |
| | | **M35.ZD19** | |
| **Drawer base [30]** | | | |
| 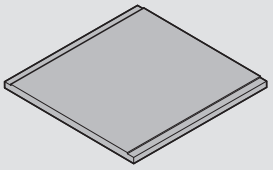 | 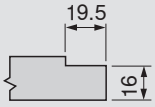  | 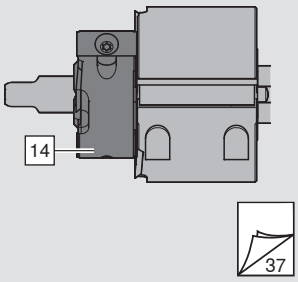  | 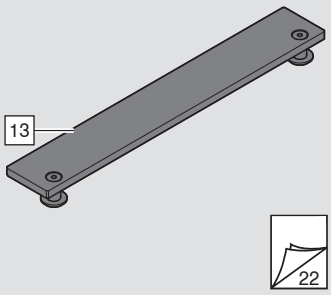  |
| | | **M35.ZD19** | |

**Depending on device type not part of the scope of delivery**

| Set-up | | | | Processing |
|---|---|---|---|---|
| Support stop [12] | Depth stop [6] | Timber stop [7] | Support [5] | |
| 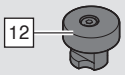 | 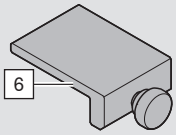 | 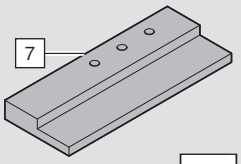 | | Clamp workpiece |
| **M35.ZD19** | **M35.0035.01** | **M35.ZT01** | | Mill workpiece |
| | 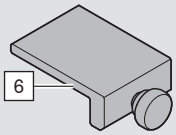 | 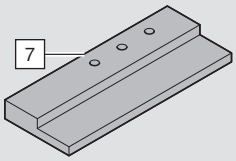 | | |
| | **M35.0035.01** | **M35.ZT01** | | |

| Set-up | | | | Processing |
|---|---|---|---|---|
| Support stop [12] | Depth stop [6] | Timber stop [7] | Support [5] | |
| 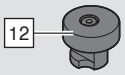 | 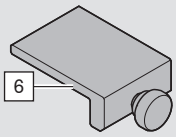 | 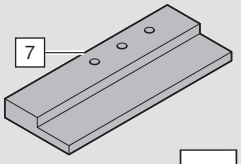 | | Clamp workpiece |
| **M35.ZD19** | **M35.0035.01** | **M35.ZT01** | | Mill workpiece |
| | 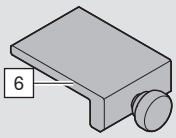 | 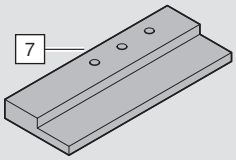 | | |
| | **M35.0035.01** | **M35.ZT01** | | |

**In scope of delivery**

## F – Set-up

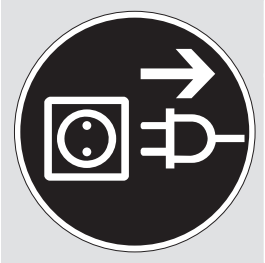

**WARNING**

**Serious cuts.**

**Failure to heed this warning may result in personal injury.**

➢ The base router must be disconnected from the power supply.

**Stop bar [13]**
**(optional accessory**
**Part number: M35.ZD19)**

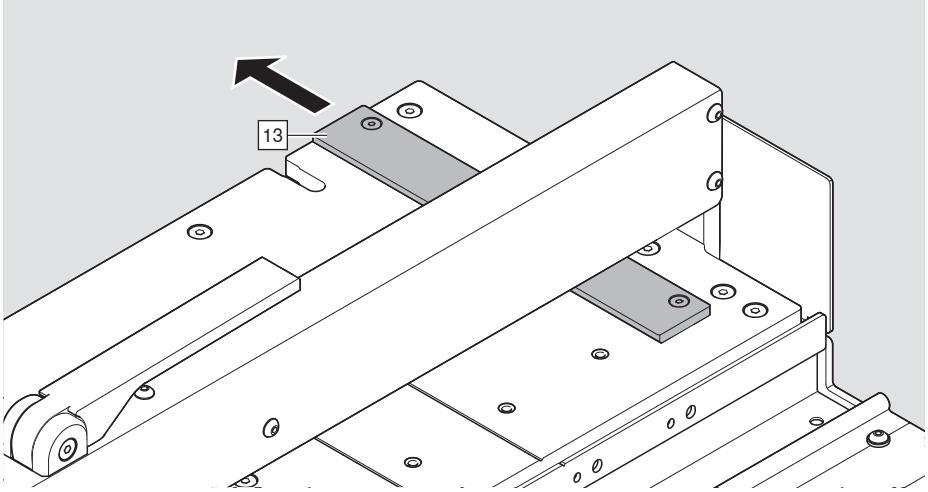


➢ Remove the stop bar [13] from the parked position.

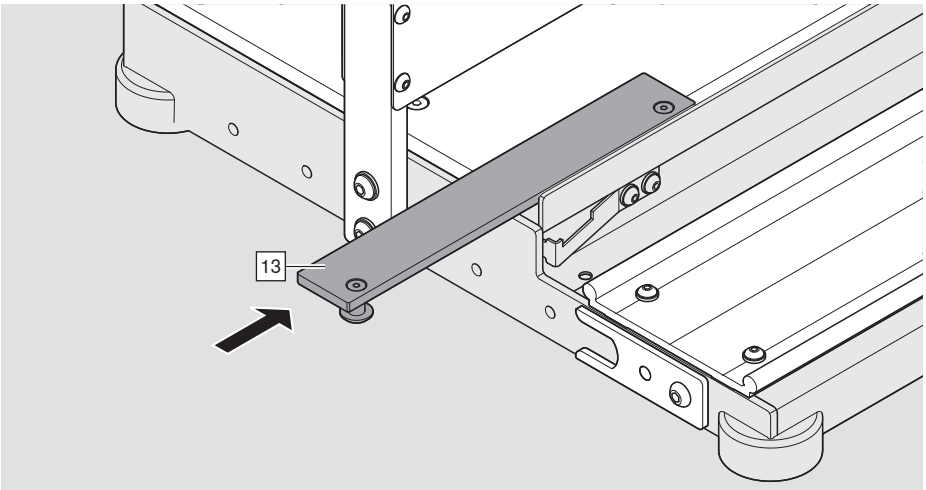


➢ Push the stop bar [13] into the runner of the base router.

**Support stop [12]**
**(optional accessory**
**part number: M35.ZD19)**

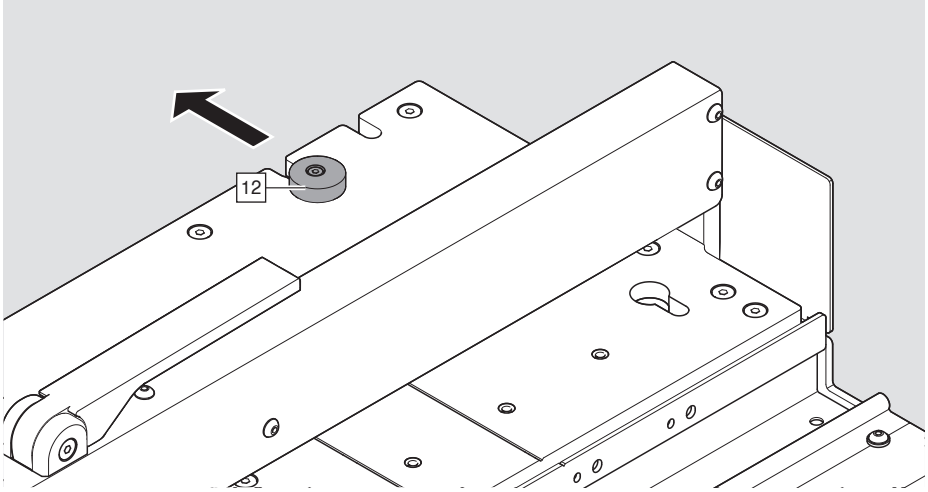


➢ Remove the support stop [12] from the parked position.

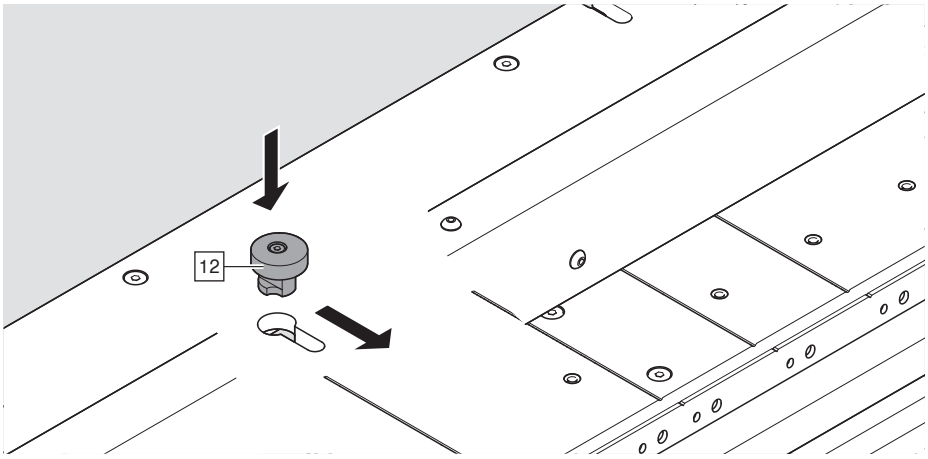


➢ Mount the support stop [12] in the working position.

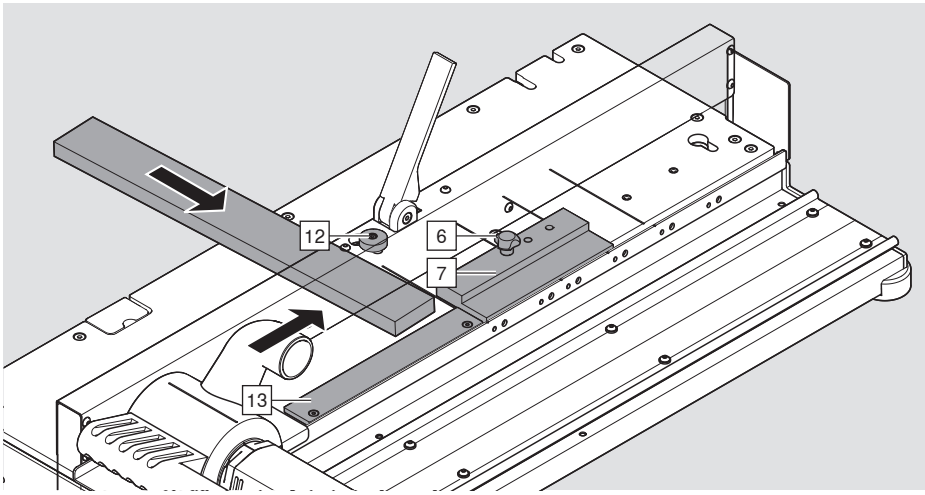


➢ Mount the depth stop [6] or timber stop [7] in the furthest forward position. See page 25.

➢ Push the workpiece to the support stop [12], stop bar [13] and depth stop [6] or timber stop [7].

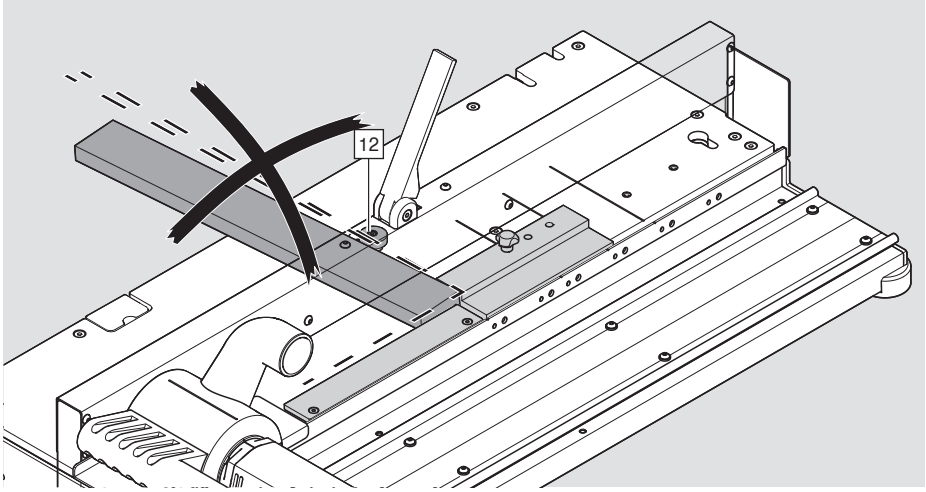


The support stop [12] must be aligned.

➢ Check whether a right angle is present.

If there is no right angle, proceed as follows:

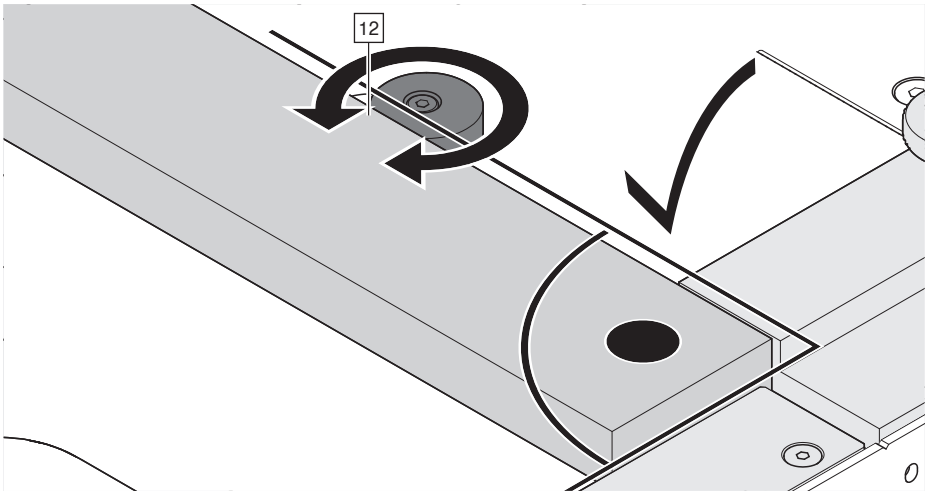


➢ Loosen the screw of the support stop [12].

➢ Rotate the support stop [12] until a right angle is formed.

➢ Screw the support stop [12] into place.

**Positioning the depth stop [6]**

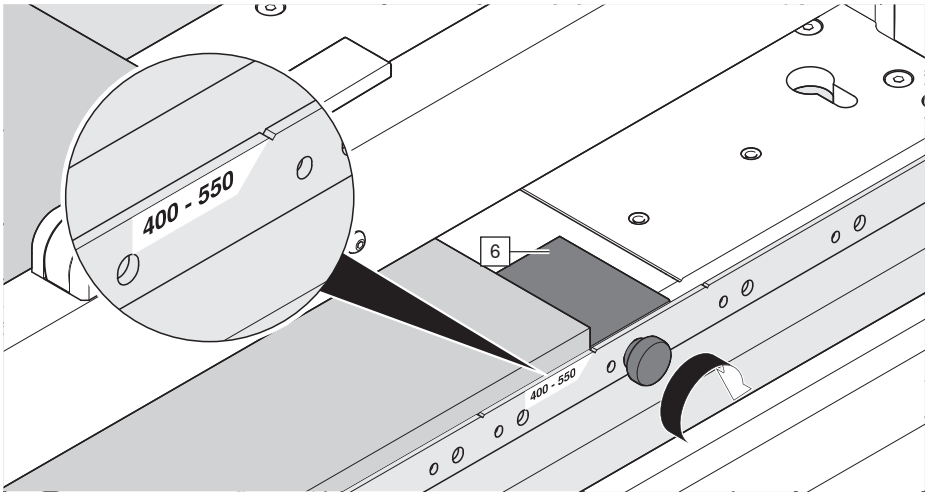


➢ Mount the depth stop [6] in accordance with the drawer nominal length.
➢ When processing the back [31], the depth stop [6] must always be mounted in the furthest forward position.

**Positioning the timber stop [7]**

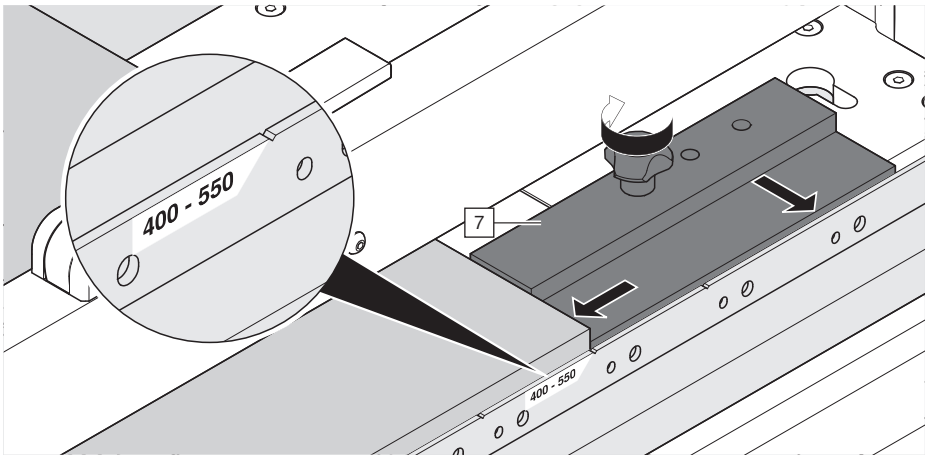


➢ Mount the timber stop [7] in accordance with the drawer nominal length.
➢ When processing the back [31], the timber stop [7] must always be mounted in the furthest forward position.

**Support [5]**

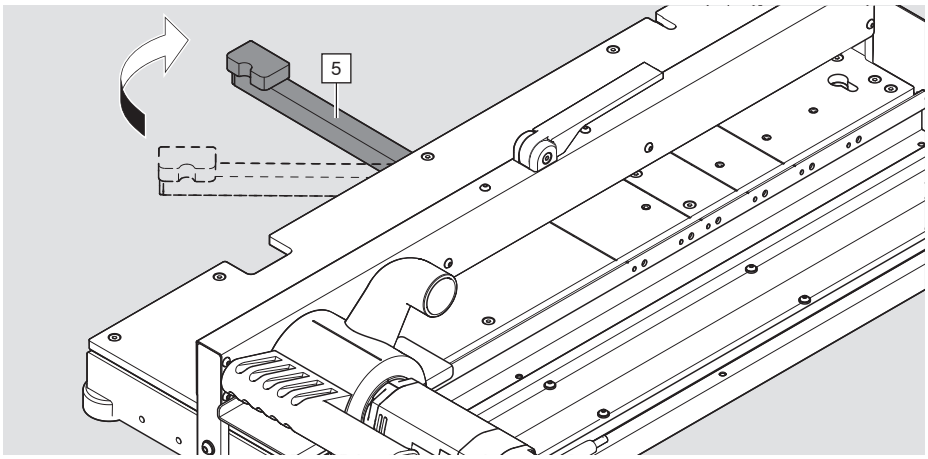


➢ Drawer base width 500 mm: swivel out the support [5].
➢ Swivel out the support [5] until the stop (right angle).

## G – Clamping the workpiece

**NOTE**

- There should be no wood chips on the work top [4] and stop surface as they can affect the accuracy of the notch or damage the surface of the workpiece.

### Clamping the drawer base [30]

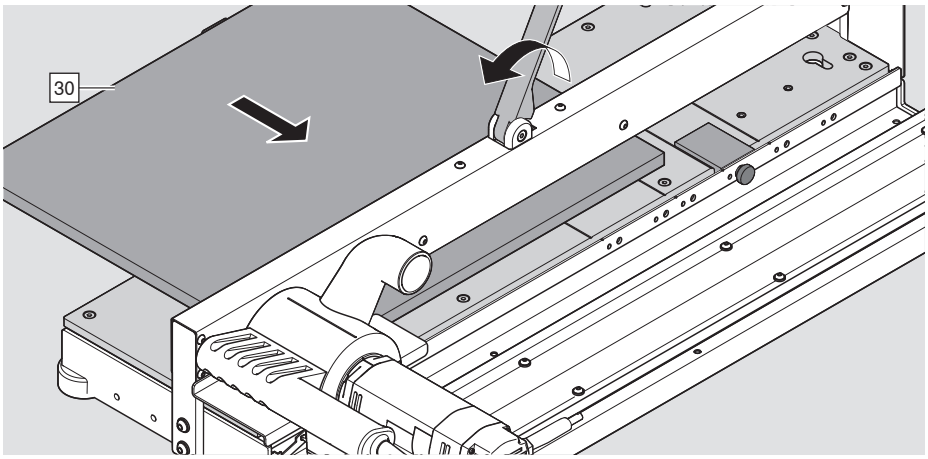


➢ Lay the drawer base [30] on the base router, as shown.

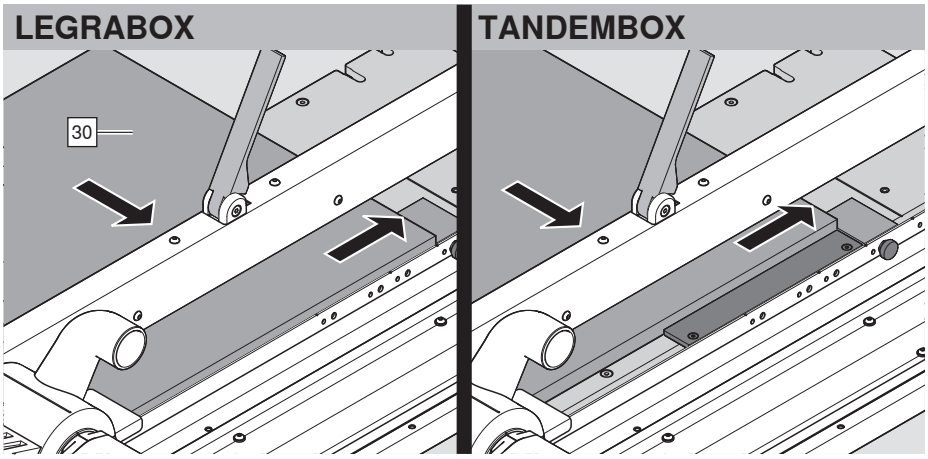


➢ Push the drawer base [30] onto the stops, as shown.

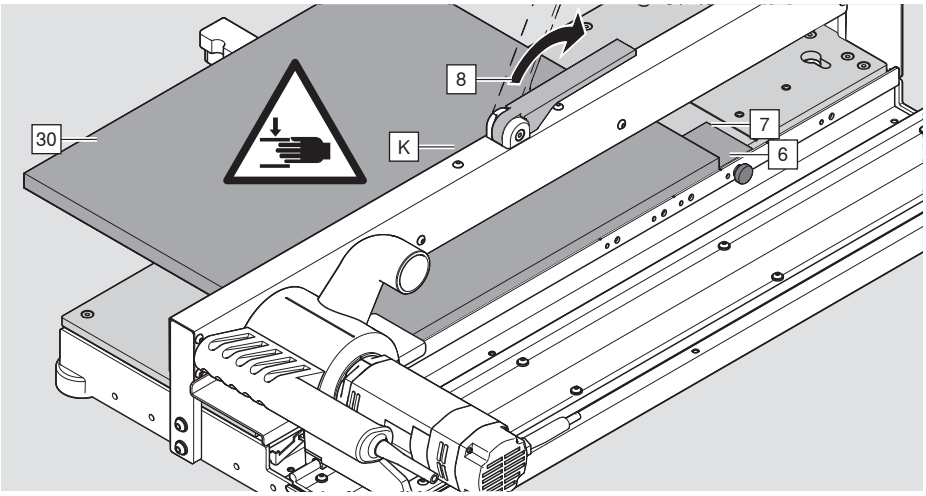


**CAUTION**

- Keep your hands away from the clamp (K).

➢ Keep the drawer base [30] pressed down on stops [6] [7].
➢ Push down the clamping lever [8].
➢ Check again that the workpiece is lying flat against the stops.

**Clamping the back [31]**

**NOTE**

- There should be no wood chips on the work top [4] and stop surface as they can affect the accuracy of the notch or damage the surface of the workpiece.

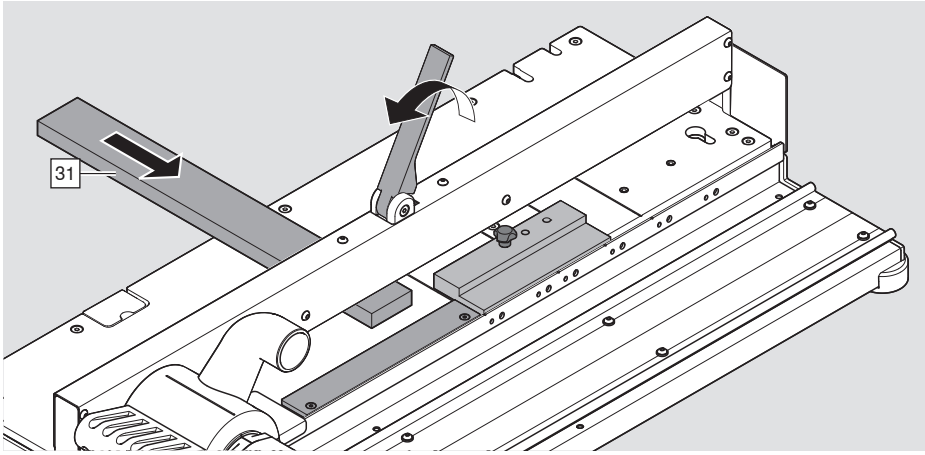


➢ Lay the back [31] on the base router, as shown.

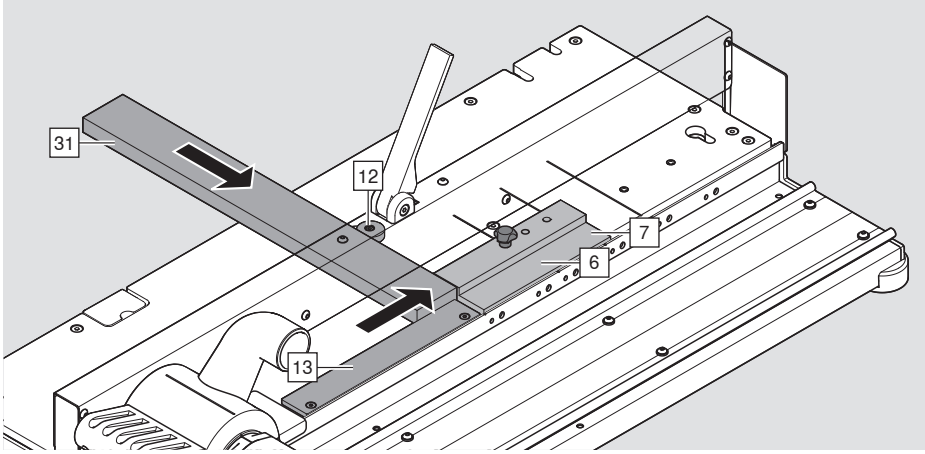


➢ Push the back [31] onto the stop bar [13], support stop [12] and stops [6] [7], as shown.

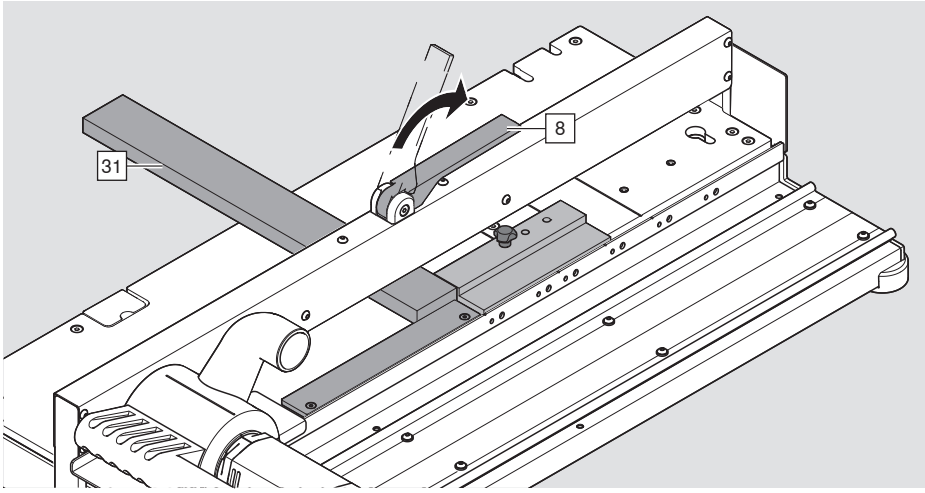


**CAUTION**

■ Keep your hands away from the clamp.

➢ Keep the workpiece [31] pressed against the stops.
➢ Push down the clamping lever [8].
➢ Check again that the workpiece is lying flat against the stops.

## H – Milling the workpiece

### Milling the drawer base

➢ Switch on the extraction system.

**NOTE**

- The extraction system must always be switched on in order to remove wood chips and dust.

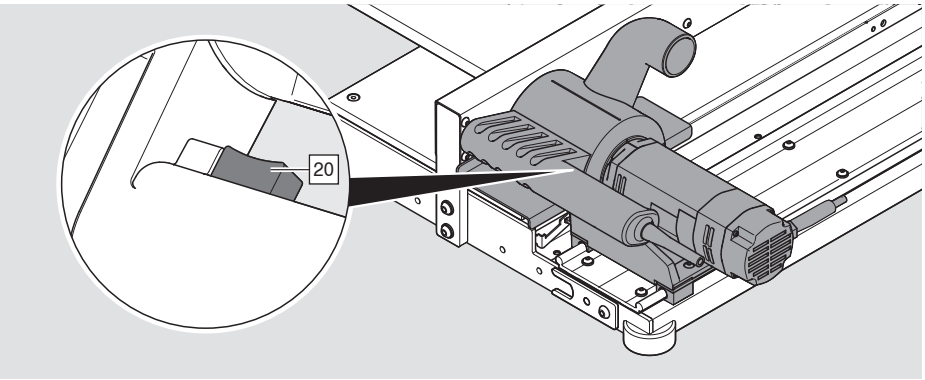


**WARNING**

**Cutting tools can cause serious injury.**

➢ No more than one person may use the base router at a time.
➢ Wear eye protection.
➢ Wear ear protection.

➢ Press the rocker switch [20].

**NOTE**

- Always allow the motor to reach full speed.
- A cutter with sharp blades considerably relieves the load on the motor and therefore extends its service life.
- The feed rate affects the quality of the notch.
- In the event of overheating due to overload, the motor will be switched off by the temperature monitoring. After a cooling phase the motor can be operated again.

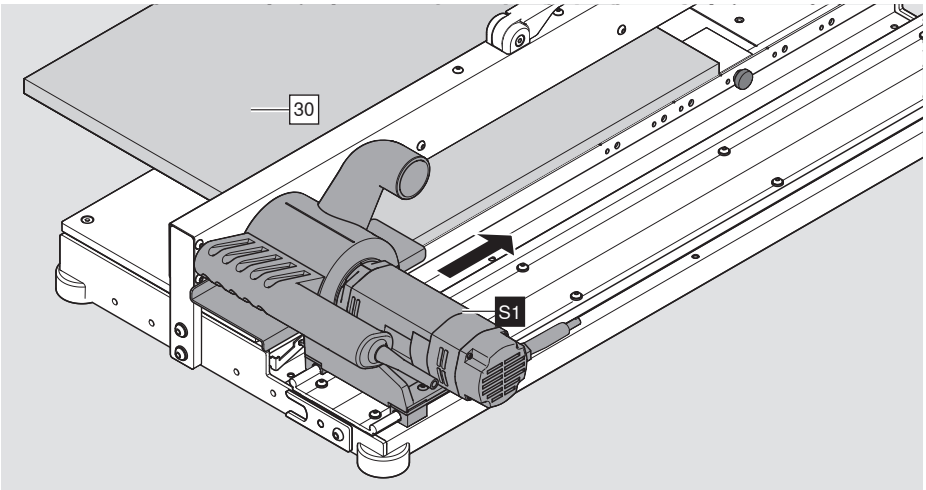


➢ Push the slide [S1] gently into the drawer base [30].
➢ At the end of the drawer base [30], gently draw the slide out from the material.

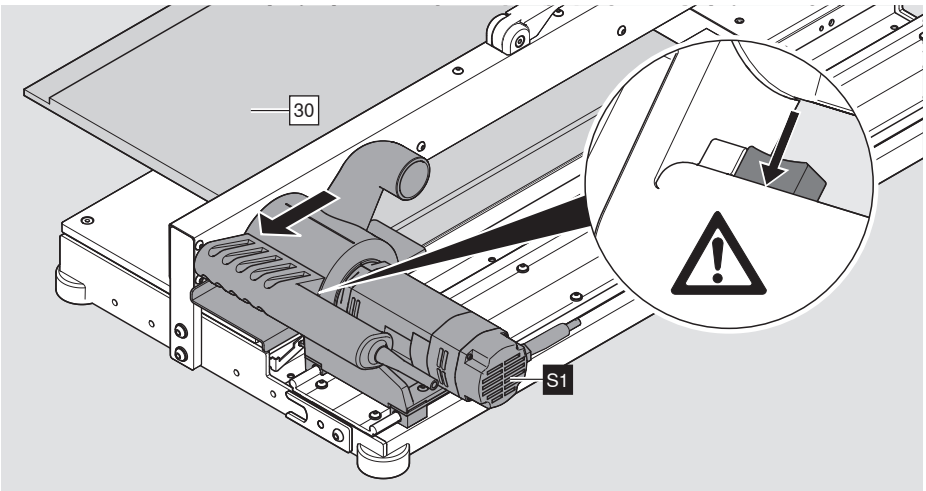


**i NOTE**

■ Never turn off the motor during the milling and return process. This could damage the motor or the notch cutter [23].

➢ Return the slide [S1] to its starting position when the motor is switched on.
➢ Leave the rocker switch [20] in the starting position.

**i NOTE**

■ When the rocker switch is released, the milling cutter continues to run for a time. Wait for the milling cutter to come to a standstill under all circumstances.

➢ For the second notch, repeat the work processes from 'Clamp workpiece'.
➢ Switch off extraction system.

**Milling the back [31]**

➢ Switch on the extraction system.

**NOTE**

- The extraction system must always be switched on in order to remove wood chips and dust when milling.

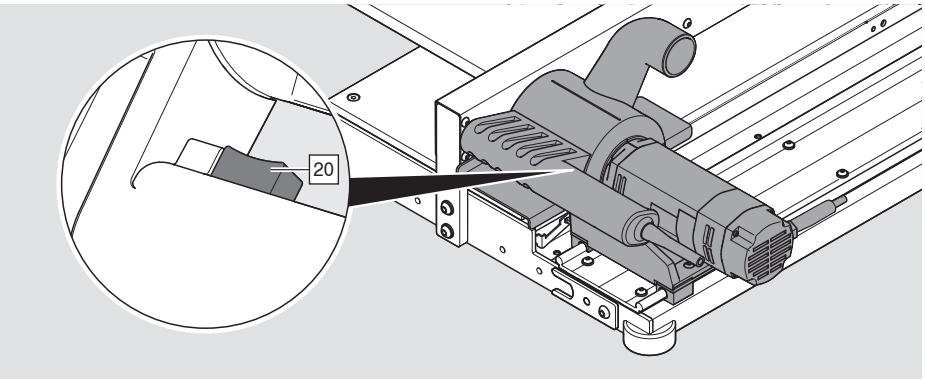


**WARNING**

**Cutting tools can cause serious injury.**

➢ No more than one person may use the base router at a time.
➢ Wear eye protection.
➢ Wear ear protection.

➢ Press the rocker switch [20].

**NOTE**

- Always allow the motor to reach full speed.
- A cutter with sharp blades considerably relieves the load on the motor and therefore extends its service life.
- The feed rate affects the quality of the notch.
- In the event of overheating due to overload, the motor will be switched off by the temperature monitoring. After a cooling phase the motor can be operated again.

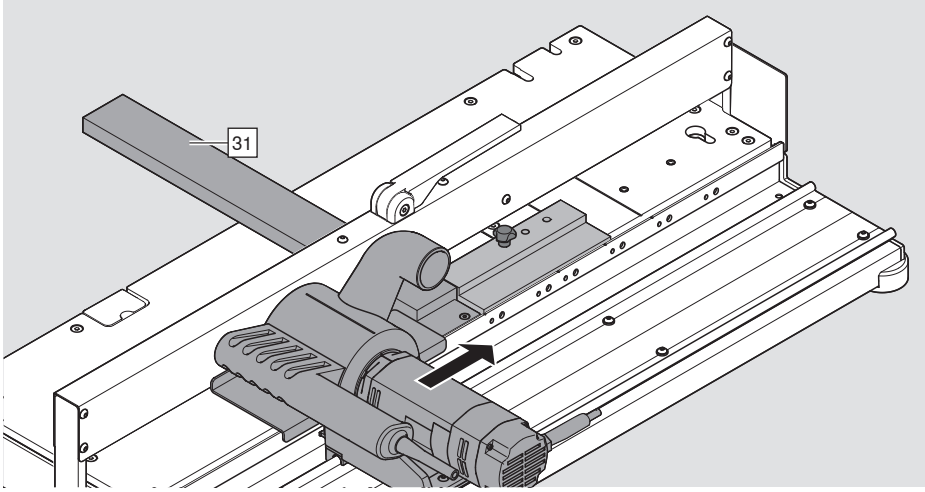


➢ Push the slide [S1] gently into the back [31].
➢ At the end of the back [31], gently draw the slide out from the material.

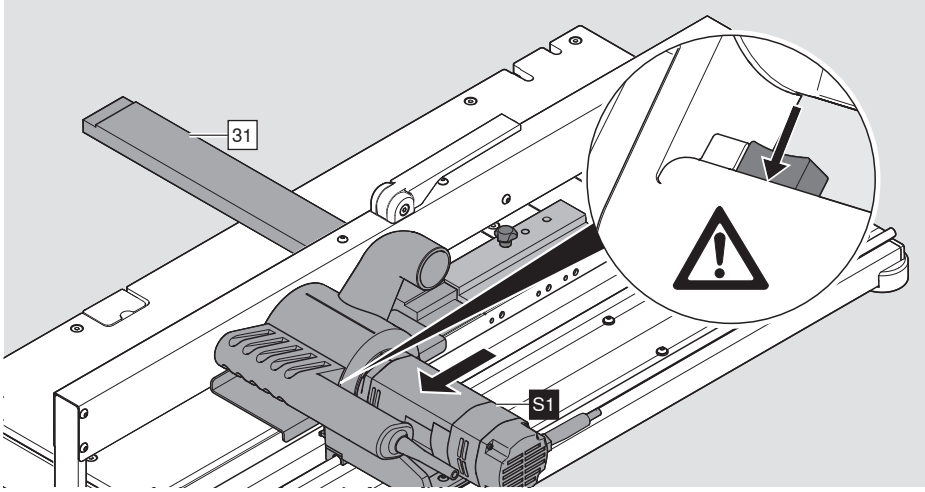


**i NOTE**

■ Never turn off the motor during the milling and return process. This could damage the motor or the notch cutter [23].

➢ Return the slide [S1] to its starting position when the motor is switched on.
➢ Leave the rocker switch [20] in the starting position.

**i NOTE**

■ When the rocker switch is released, the milling cutter continues to run for a time. Wait for the milling cutter to come to a standstill under all circumstances.

➢ For the second notch, repeat the work processes from 'Clamp workpiece'.
➢ Switch off extraction system.

## I – Maintenance

### Everyday cleaning

**WARNING**

**Serious cuts.**

**Failure to heed this warning may result in personal injury.**

➢ The base router must be disconnected from the power supply before cleaning and maintenance.

**CAUTION**

- Wear eye protection during cleaning work.

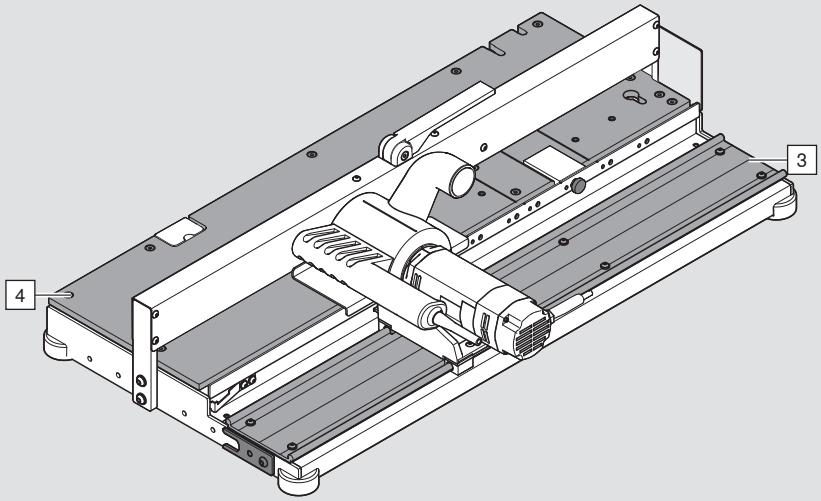


**NOTE**

- Do not use oil or lubricants during cleaning.
  All runners and bearings are maintenance-free.
- Dust and wood chips must not be removed using sharp-edged or metallic objects.
- Never use compressed air near the motor.
  Wood chips may infiltrate the motor through the ventilation slots,
  and therefore impair the motor's cooling system and service life.

➢ Keep the motor ventilation slots free of dust and wood chips.
➢ Clean the depth stop and lateral stop.
➢ Clean the runner [3] using a dry cloth.
➢ Clean the work top [4] using compressed air.

**Removing the motor**

If the motor needs to be removed for maintenance, cleaning or replacement purposes, proceed as follows:

**WARNING**

**Serious cuts.**
**Failure to heed this warning may result in personal injury.**

➢ The base router must be disconnected from the power supply before cleaning and maintenance.

**NOTE**

■ Gloves must always be worn when cleaning the cutter [23].

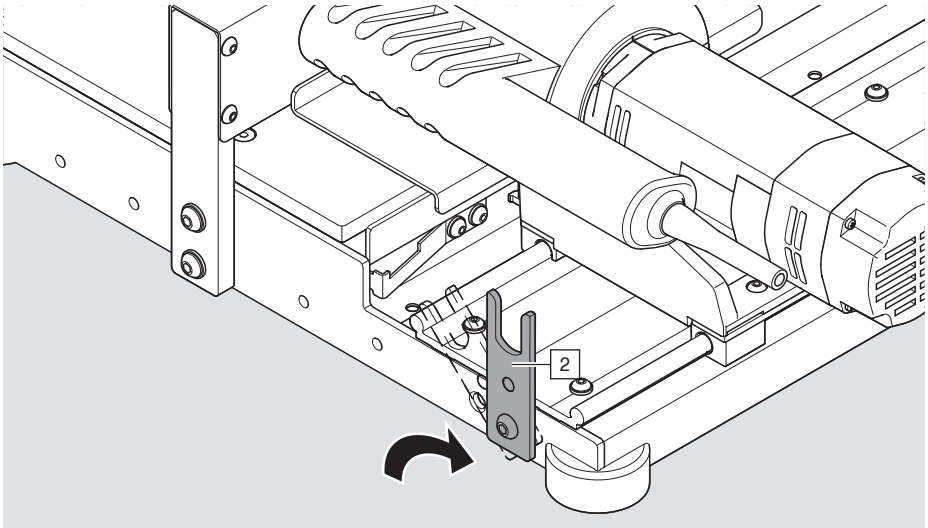


➢ Swivel the shaft holder [2] by 90 degrees.

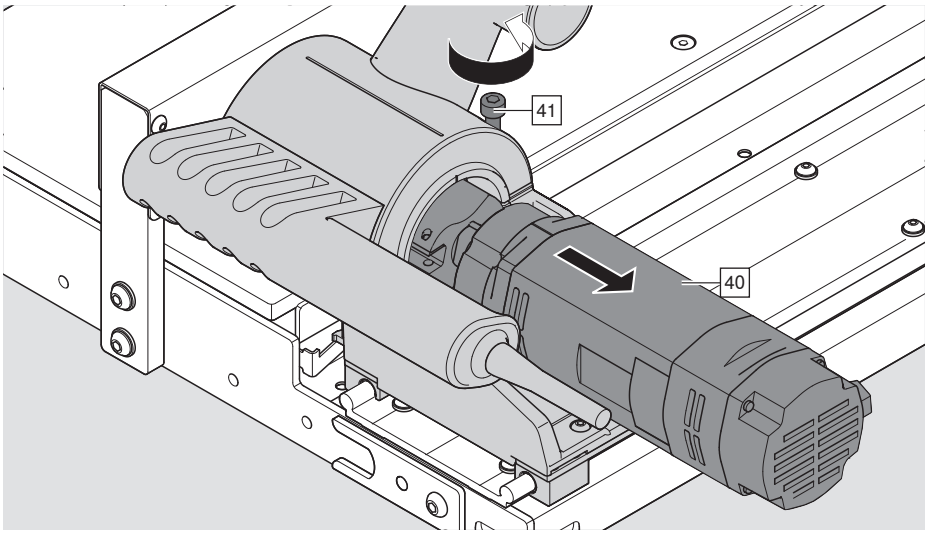


➢ Loosen the screw [41] with an SW 6 Allen key.
1/4 rotation – 90°

➢ Carefully remove the motor [40]. Damage to the cutting inserts is possible.

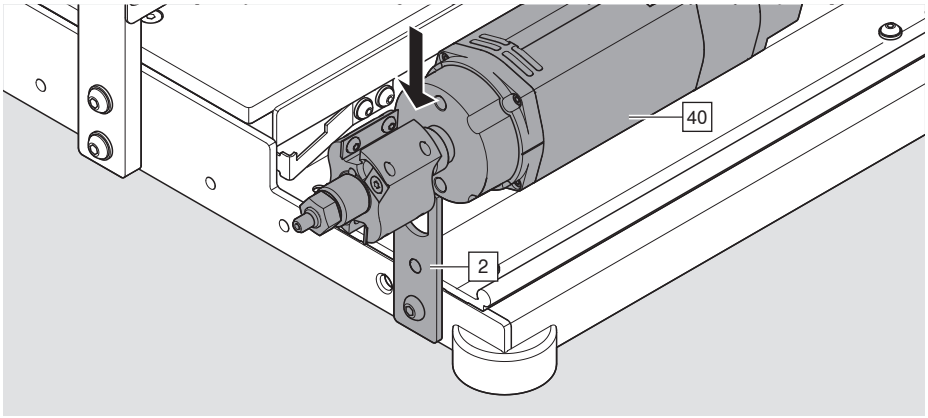


➢ Place the motor [40] in the shaft holder [2].

**Installing the motor**

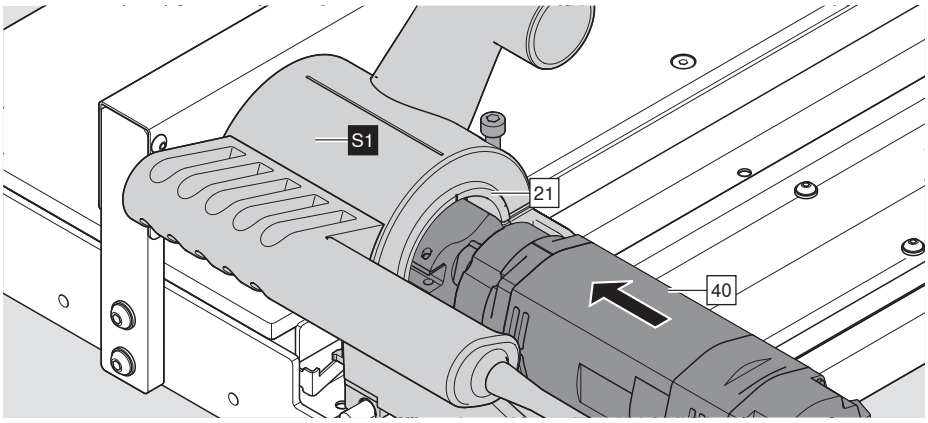


➢ All the fixing and clamping surfaces [21] on the slide [S1] and motor [40] must be free of dust and wood chips.

➢ Push the motor carefully on to the stop flange [21]. Damage to the cutting inserts is possible.

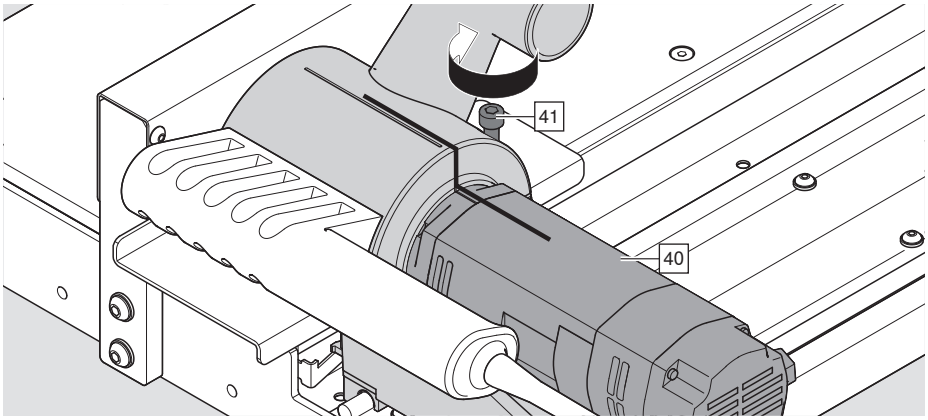


**i NOTE**

■ Pay attention to the motor position. The motor's ventilation slot [40] must not be covered. Risk of overheating.

➢ Turn the motor [40] to the correct position.

➢ Tighten screw [41].

**Cleaning the housing**

If the housing [G] of the slide [S1] is filled with wood chips or if the cutter is blocked, proceed as follows:

Removing and installing the motor 34

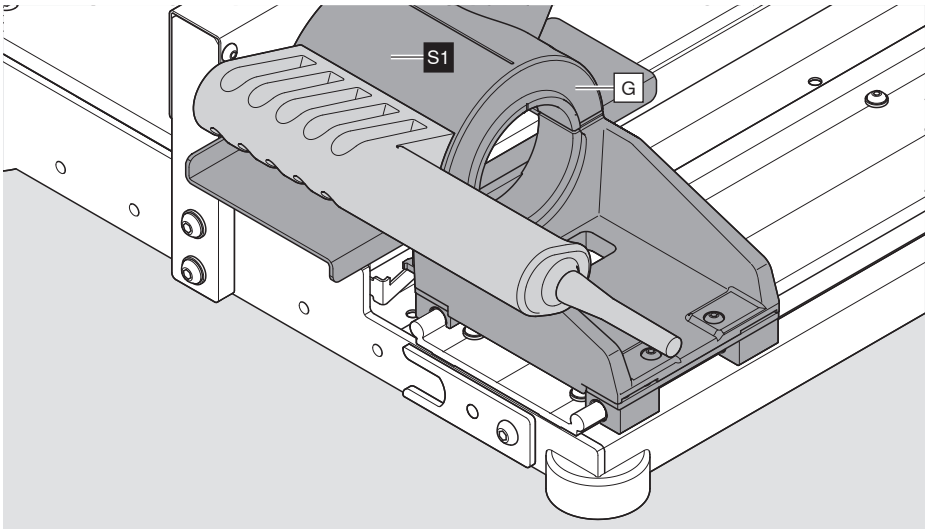


➢ Remove the wood chips from the housing [G].

**Installing/removing the cutter**

Removing and installing the motor 34

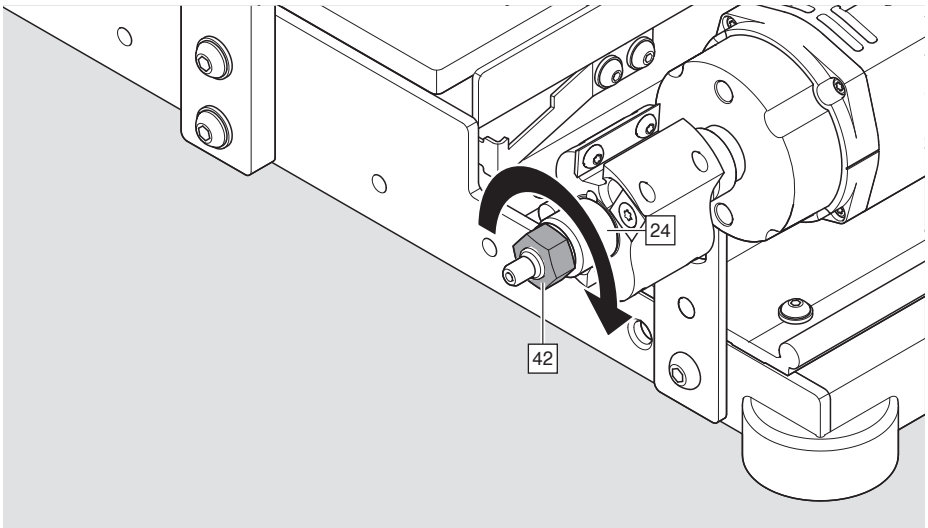


➢ Turn the nut [42] clockwise using the IM spanner.

**i NOTE**

- The thread on the motor shaft is a left hand thread.

**Retrofitting cutter DM 44 [14]**
**(optional accessory**
**Part number: M35.ZD19)**

Removing and installing the motor

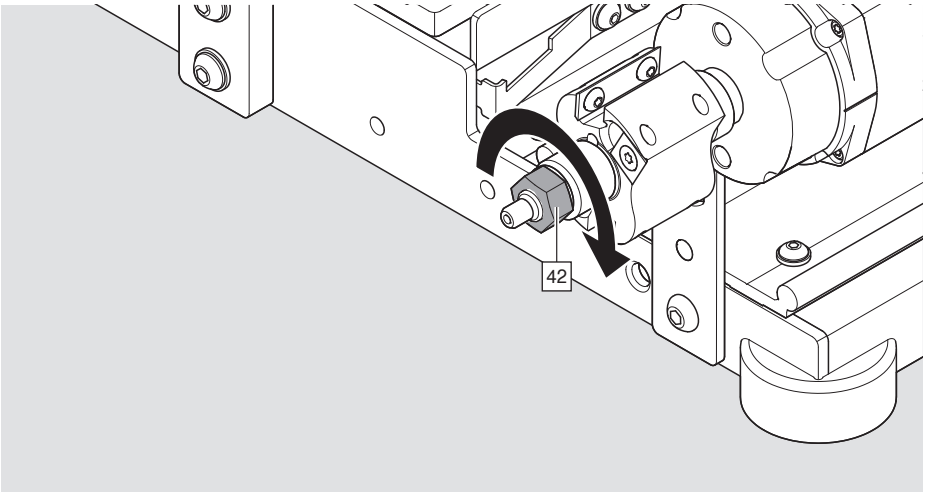


➢ Turn the nut [42] clockwise using the IM spanner.

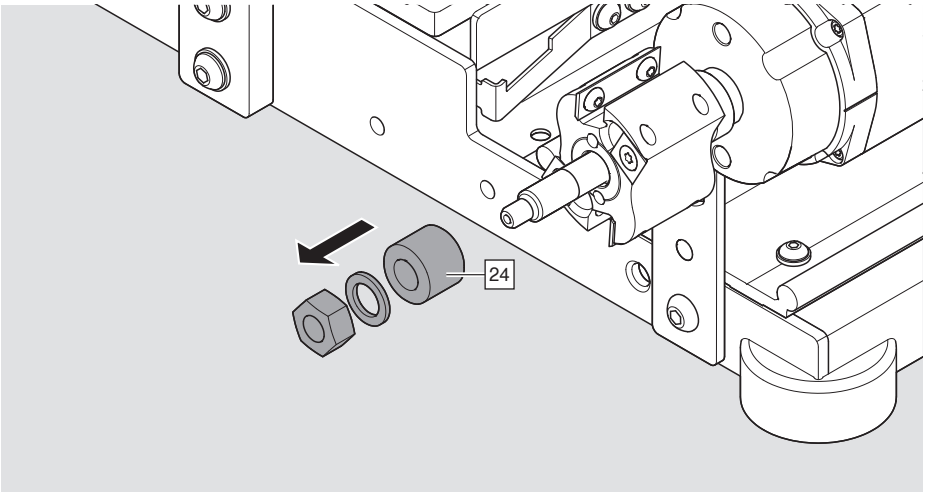


➢ Remove the spacer sleeve [24].

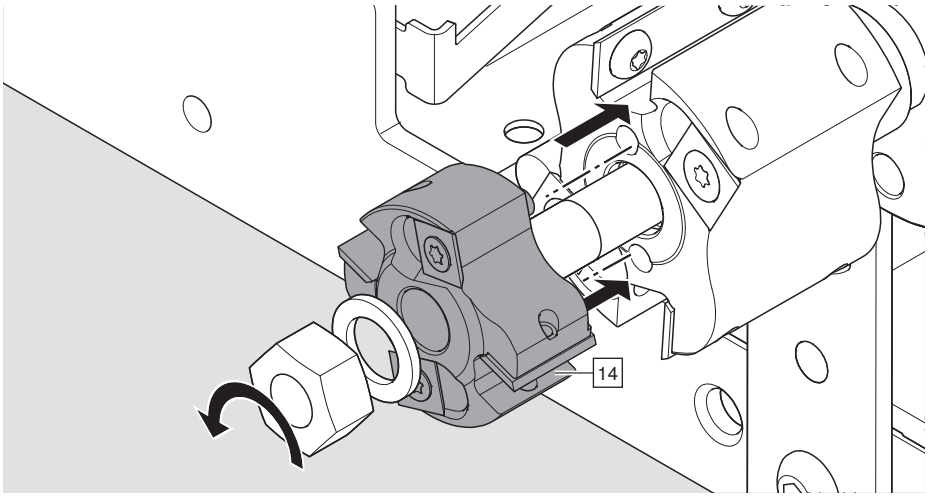


➢ Mount the cutter DM 44 [14].

## Changing the cutting inserts

Removing and installing the motor 34

**WARNING**

**Serious cuts.**

**Failure to heed this warning may result in personal injury.**

➢ The base router must be disconnected from the power supply before cleaning and maintenance.

➢ Wear gloves.

**NOTE**

- The blades should be changed in the following sequence:
  Whenever the pre-cutters [50] are turned for the second time, the cutting inserts [51] should also be turned. The pre-cutter [50] has the highest load.
- Sharp blades significantly extend the service life of the motor.
- For spare parts, see page 43.

Changing the pre-cutter [50].

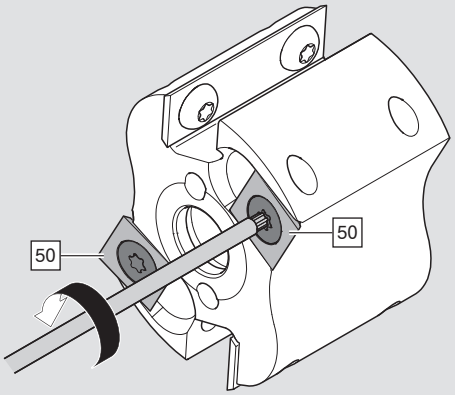


➢ Loosen the pre-cutter screw [50] by turning it anticlockwise.

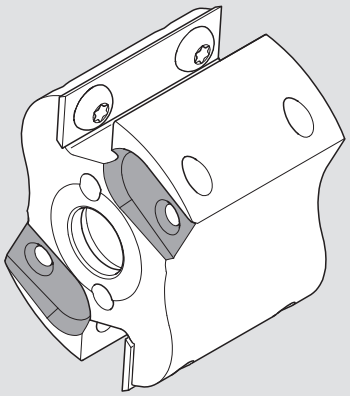

➢ Clean the base of the pre-cutter [50] using a dry cloth.

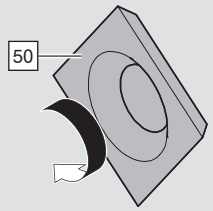


➢ Clean the pre-cutter [50] using a dry cloth.
➢ Turn the pre-cutter [50] 90 degrees.

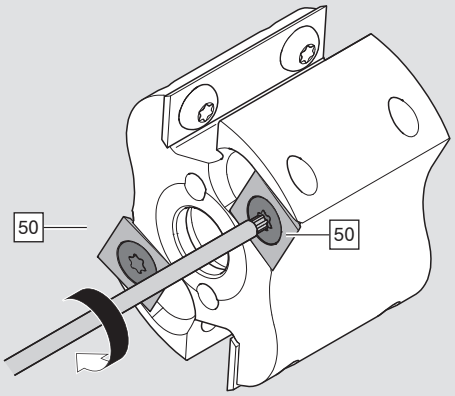


➢ Tighten the screw in the pre-cutter [50] by turning it clockwise.

**i NOTE**

■ Only the TORX® key provided may be used.

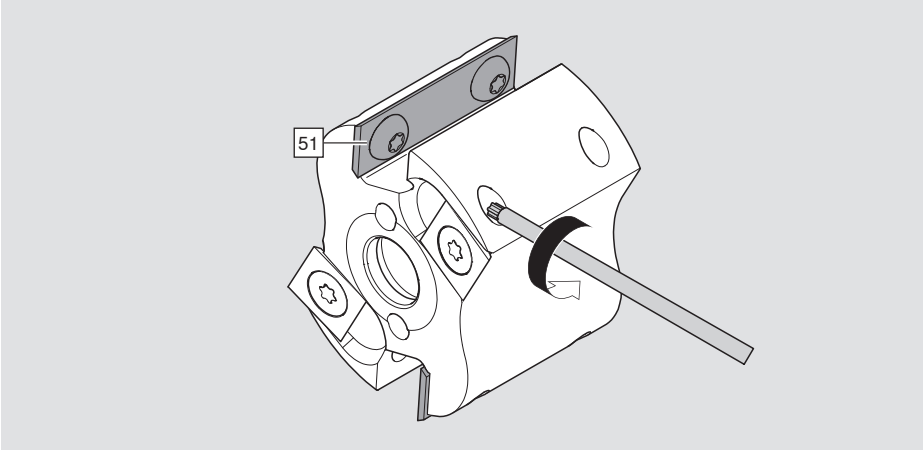


➢ Loosen the screw for the cutting insert [51] by turning it anticlockwise.

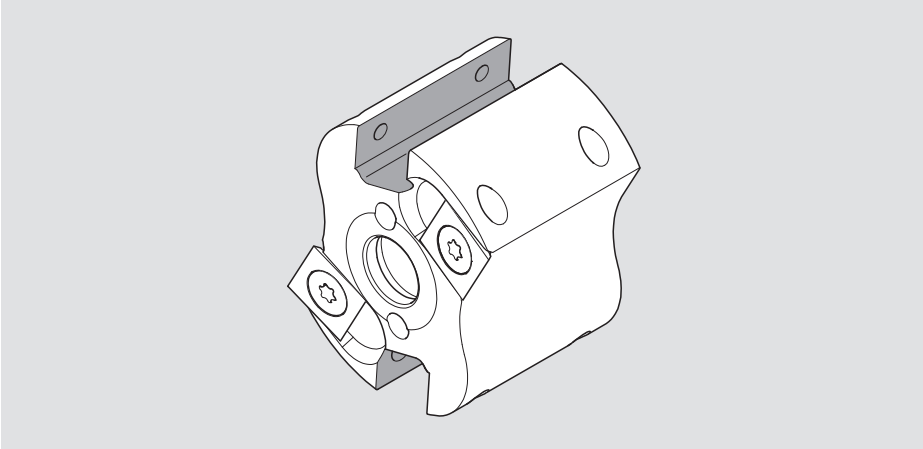

➢ Clean the base of the cutting inserts [51] using a dry cloth.

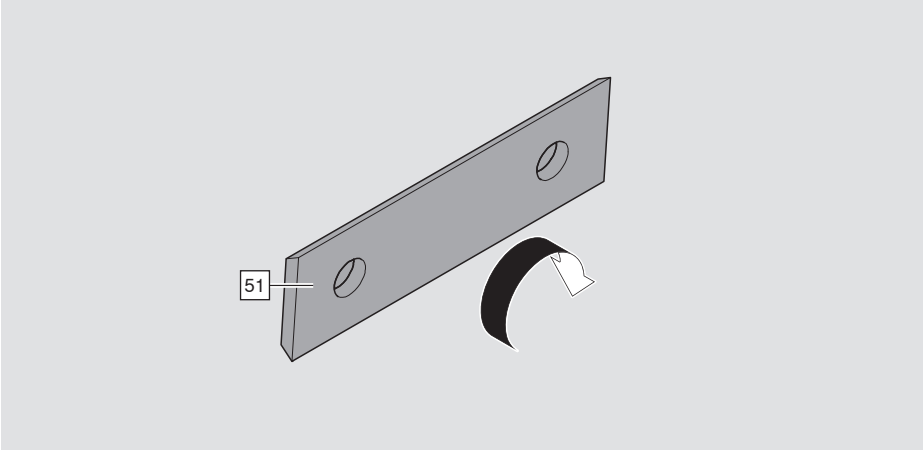


➢ Turn the cutting insert [51] 180 degrees.

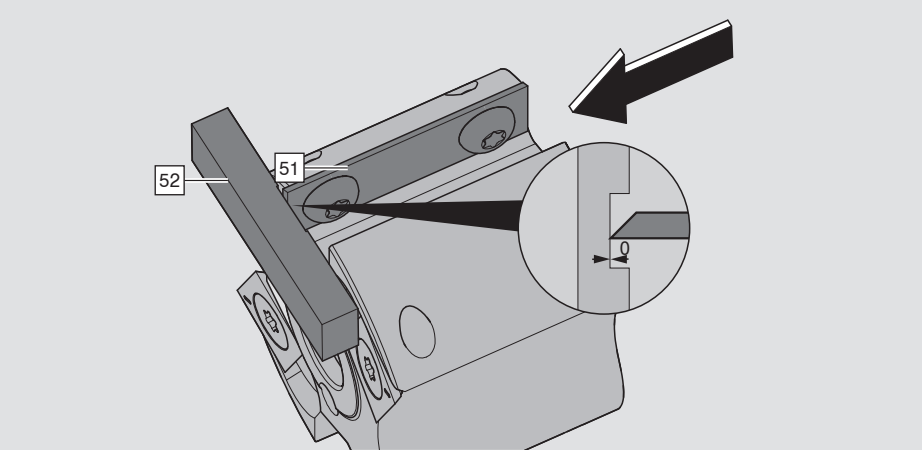


➢ Position the cutting insert [51] using the setting gauge [52].

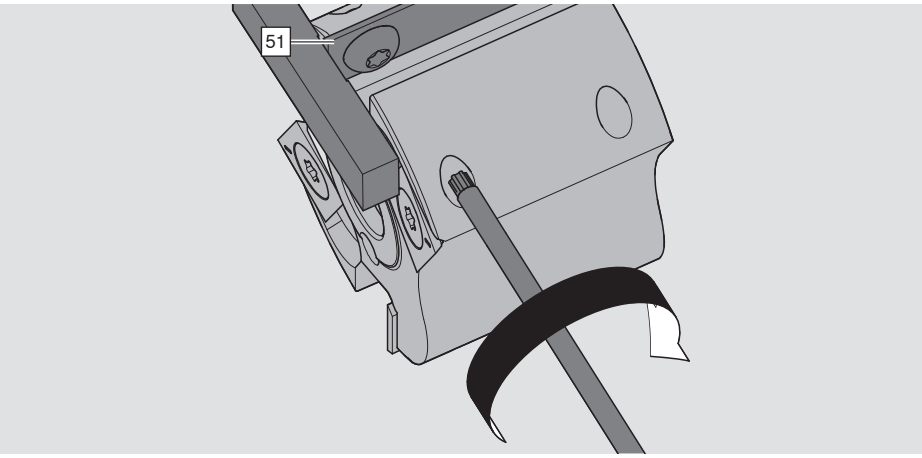


➢ Tighten the screw for the cutting insert [51] by turning it clockwise.

**i NOTE**

- Only the TORX® key provided may be used.

**i NOTE**

- After all four pre-cutter positions have become worn, the entire set consisting of pre-cutters [50] and cutting inserts [51] must be replaced.

## J – Troubleshooting

| Fault | Possible cause | Remedy |
|---|---|---|
| Incorrect notch dimensions | Workpiece not clamped correctly | ➢ See page 26 |
| | Dirty stops | ➢ See page 33 |
| | Dirty work top | ➢ See page 33 |
| | Workpiece is not flat against the support | ➢ See page 25 |
| | Cutter worn out | ➢ See page 38 |
| | Cutting inserts not correctly mounted | ➢ See page 38 |
| Notch edges are torn | Cutter worn out | ➢ See page 38 |
| | Rear stop missing, timber stop worn | ➢ See page 25 |
| | Feed too fast | ➢ See page 29 |
| Strong vibrations on base router | Base router not clamped | ➢ See page 11 |
| | Workpiece not clamped | ➢ See page 26 |
| Strong vibrations on the motor | Incorrect material | ➢ See page 3 |
| | Cutter not screwed tightly | ➢ See page 36 |
| | Motor in the slide not correctly clamped | ➢ See page 35 |
| | Cutting inserts not screwed tightly | ➢ See page 38 |
| | Not all the cutting inserts have been installed | ➢ See page 38 |
| | Damaged cutting inserts | ➢ See page 38 |
| Motor overheated | Feed too fast | ➢ See page 29 |
| | Cutter worn out | ➢ See page 38 |
| | Motor ventilation slots are blocked | ➢ See page 33 |
| | Carbon brush worn | ➢ See MA-709 |
| Motor temporarily cuts out | Overheating due to overloading | ➢ See page 29 |
| | Carbon brush worn | ➢ Spare part M35.ZM01 |

## K - Spare parts

When ordering spare parts, state the year of construction and serial number.

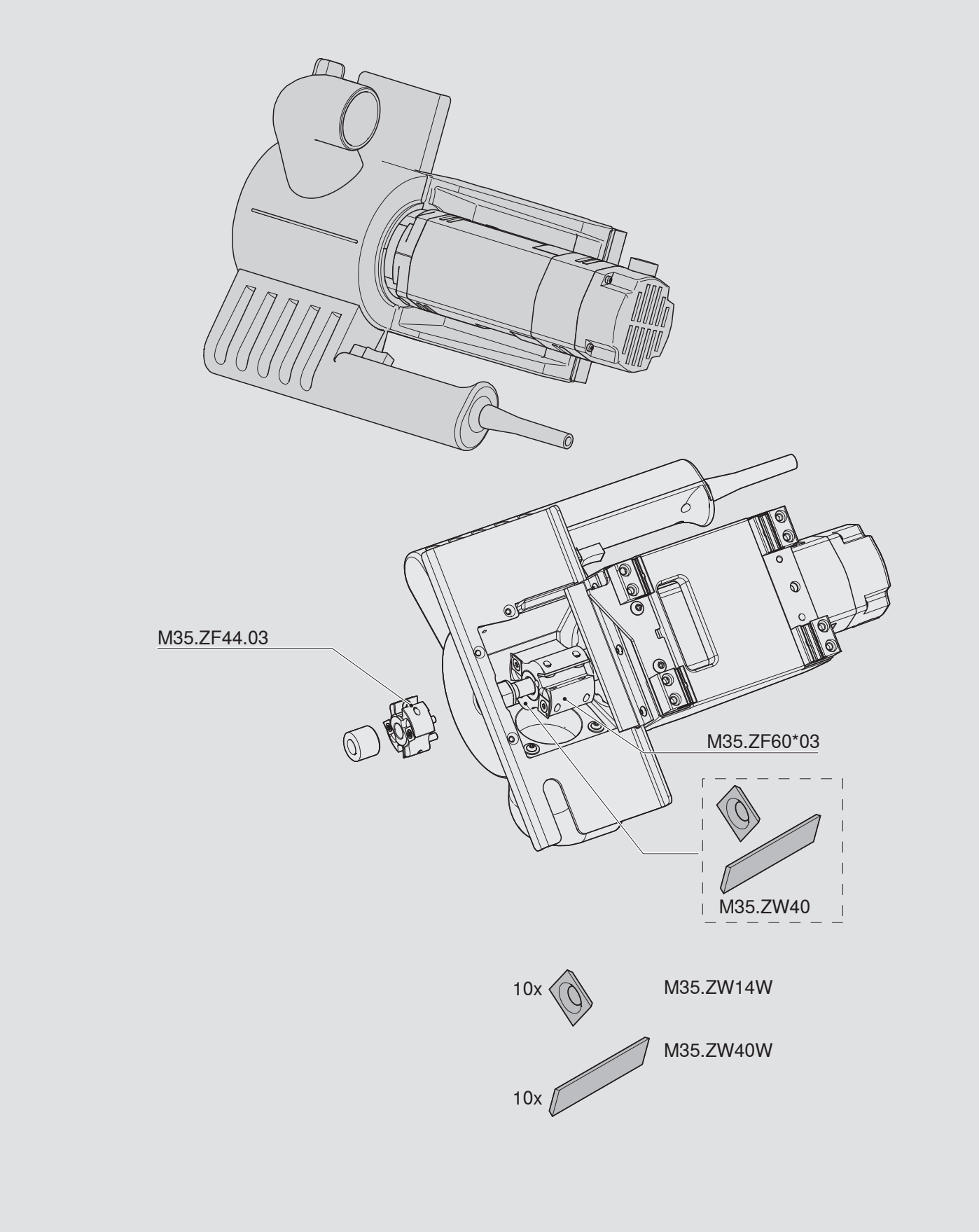

## L – Scope of delivery

| | |
|---|---|
| Base router | M35.7200.XX |
| Cutter | M35.ZF0-60.03 FRAE-KO |
| Extraction socket | M51N0603 TRI+ZUT |
| Spanner 19 | |
| Allen key 6 | |

## Disposal

- ➢ Dispose of all mechanical components of the base router in accordance with local regulations.
- ➢ Dispose of all electrical components of the base router in a separate collection for electrical and electronic appliances as per local regulations.

## M – SIMPLIFIED EU DECLARATION OF CONFORMITY

Hereby, Julius Blum GmbH declares that all electrical and electronic article types of Julius Blum GmbH are in compliance with Directive 2011/65/EU.
Hereby, Julius Blum GmbH declares that the machinery types “Falzfraese” are in compliance with Directive 2006/42/EC, Directive 2014/30/EU and Directive 2009/125/EG. The full text of the EU declaration of conformity is available at the following internet address: www.blum.com/compliance

## M – SIMPLIFIED UK DECLARATION OF CONFORMITY

Hereby, Julius Blum GmbH declares that all electrical and electronic article types of Julius Blum GmbH are in compliance with UK statutory requirement 2012 No. 3032.
Hereby, Julius Blum GmbH declares that the machinery types “Falzfraese” are in compliance with UK statutory requirement 2008 No. 1597, UK statutory requirement 2016 No. 1091 and UK statuatory requirement 2010 No. 2617 with consideration of the EU regulation amendments 2019 No. 696, 2019 No. 1246, 2020 No. 676 and 2020 No. 852. The full text of the UK declaration of conformity is available at the following internet address: www.blum.com/compliance

## Technical data

Only use in dry, enclosed rooms.

**Dimensions/weight:**

| | |
|---|---|
| Height: | 250 mm |
| Width: | 580 mm |
| Depth: | 990 mm |
| Weight: | 29 kg |

**Energy:**

| | |
|---|---|
| Voltage: | 1x 230–240 V 50–60 Hz |
| Power: | 1050 W |

**Sound:**

| | |
|---|---|
| Emission – Sound pressure level (LAequ): | 92 dB(A) |
| Sound power level tolerance measurement uncertainty: | +/- 4 dB(A) |

**Temperature:**

| | |
|---|---|
| Operation: | 5–40 °C |
| Storage: | -20–70 °C |

**Workpiece:**

| | |
|---|---|
| Nominal length of drawer base: | 270–650 mm |
| Cabinet width: | 275–1200 mm |
| Panel thickness: | 15–19 mm |

## Serial tag

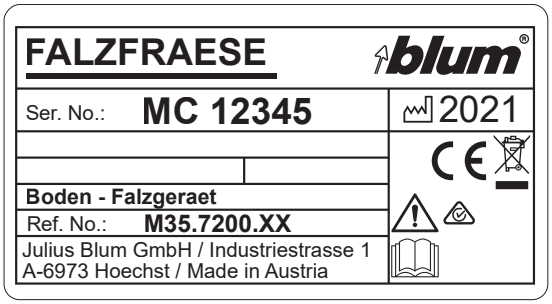


Device type: Base router

## Panel thickness limitations >16 mm–19 mm

For TANDEMBOX and LEGRABOX, Blum recommends using a panel thickness of 16 mm for back and base. The following limitations are to be taken into account when using thicker panel material (up to 19 mm).

**LEGRABOX limitations:**

Back with >16 to 19 mm

- With SERVO-DRIVE, the drilling positions and space requirement have to be adjusted.

Base with >16 to 19 mm

- Use of steel back only possible with additional notch at rear of drawer base.
- Use of front piece only possible with additional notch at front of drawer base.
- Use of side stabiliser only possible in combination with steel back.
- TIP-ON synchronisation can only be used with a panel width of up to 18 mm.
- With the front stabiliser, the drilling position and space requirement beneath need to be considered.
- LEGRAPRESS cannot be used.
- Base/back drilling template (ZML.7000) cannot be used.

**TANDEMBOX limitations:**

Back with >16 to 19 mm

- With SERVO-DRIVE, the drilling positions and space requirement have to be adjusted.
- The side stabiliser installed at the rear cannot be used. (Side stabiliser installed at the top possible.)

Base with >16 to 19 mm

- Use of steel back only possible with additional notch at rear of drawer base.
- Use of front piece only possible with additional notch at front of drawer base.
- TIP-ON is not possible.
- Sink pull-out: notch for sink drawer side also necessary.
- With the front stabiliser, the drilling position and space requirement beneath need to be considered.

## Notes

Blum partners worldwide can be found at:
www.blum.com/addresses

Look for our FSC™-certified products

FSC
www.fsc.org
FSC™ C115115

BAU0148373428 · INX: 02 · IDNR: 1791995 · BA-199/0EN M35.X200.01 · 08.26 · © Copyright by Blum

Julius Blum GmbH
Furniture Fittings Mfg.
6973 Höchst, Austria
Tel.: +43 5578 705-0
Fax: +43 5578 705-44
E-mail: info@blum.com
www.blum.com

Our sites in Austria, Poland and China are certified to the international standards mentioned below.
Our site in the USA is certified to ISO 9001.
Our site in Brazil is certified to ISO 9001 and ISO 14001.

ISO 9001 Certified Quality System
ISO 14001 Certified Environmental System
ISO 50001 Certified Energy System

blum®