METABOX

The Versatile Metal Drawer System

blum.com

Endless Possibilities

With METABOX, Blum offers an economical steel drawer for different application options in the kitchen, bathroom and office.

Contents

METABOX

4 METABOX drawer system

5 Testing standards

6 General specifications

8 320N drawer series

10 320M drawer series

12 320K drawer series

14 320H drawer series

16 Gallery rail

19 Interior roll-out application

22 BLUMOTION for METABOX

24 File drawer application

27 Assembly aids

33 Accessories

36 Drawer front overlay charts

39 Part Number Index

METABOX

Virtually unlimited storage solutions

The METABOX drawer program has a wide range of heights, lengths and optional accessories available. Within this comprehensive system, everything stored is easy to access and even small or bulky items are handled with ease.

METABOX's design complements the style of frameless cabinetry that has gained popularity because of its effective use of cabinet interior space. Since it is fully compatible with the 32 mm cabinet construction system, the METABOX program makes installation quick and precise.

METABOX is a great solution for kitchens, baths, office, healthcare and commercial applications.

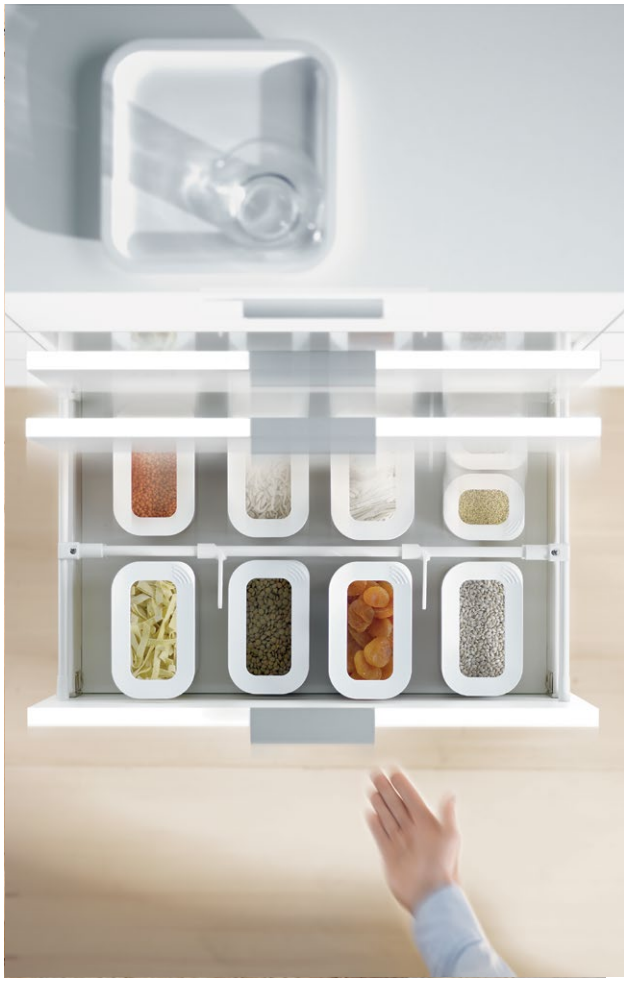

Features & benefits

- Application possibilities
- Contemporary design
- Three-dimensional front adjustment
- Easy cam height adjustment
- Simple insertion and removal
- With BLUMATIC self-closing feature
- BLUMOTION soft closing option available

Testing standards

Blum, Inc. is ISO 9001 certified which means that you are assured of consistent quality in every Blum product. All Blum runners must pass these tests without showing a measurable reduction in performance or deviation in adjustment position. Testing standards vary between products and applications.

All Blum runners meet or exceed ANSI/BHMA 156.9 grade 1 requirements. Contact your local Blum representative for more details.

Dynamic wear test

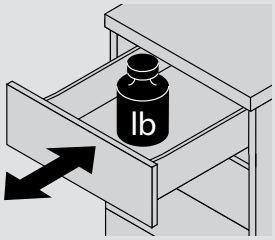

100,000 open/close cycles with a total load of 75 lb on a 550 mm drawer.

Static load test

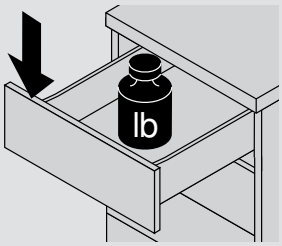

10 times for 10 seconds each time when completely extended, 66 lb is applied to the corner of the drawer front of a fully loaded drawer.

Side pressure test

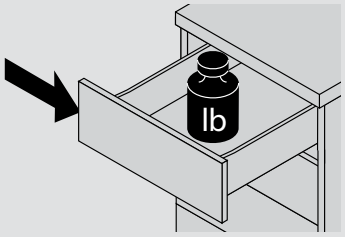

10 times for 10 seconds each time when completely extended, 33 lb is applied to the side of the drawer front of a fully loaded drawer.

> General information

All Blum hardware undergoes strict quality control procedures through all stages of production. Blum hardware is designed for cabinets and cabinet components made from wood, melamine or MDF. Careful attention must be paid to installation and operating instructions when using Blum hardware (see catalogs and instruction sheets for all technical information). The manufacturer must decide on the screws or attachment methods to suit the material being used (i.e. wood, melamine, etc.). The hardware must not be exposed to acidic or corrosive materials (i.e. some household cleaning solutions). To ensure that Blum hardware functions correctly, it must be kept clean and undamaged. For any additional information please contact your Blum representative. Anyone selling Blum hardware must ensure that their customer is aware of any relevant information given in this catalog.

Conditions of sale and delivery

All deliveries and services are based on the “general conditions of sale” which are available upon request. The technical presentations and dimensions in illustrations are non-binding. We reserve the right to make changes to specifications at any time. We do not accept any responsibility for any errors which may occur in the production of this catalog.

Cabinet types and capacity

The METABOX drawer system can be installed in either frameless or face frame constructed cabinets with optional rear mounting sockets.

METABOX drawers have a static load capacity of 100 lb and a dynamic capacity of 75 lb and are tested to perform 100,000 open/close cycles without failure.

METABOX drawers install in all cabinets

Available heights

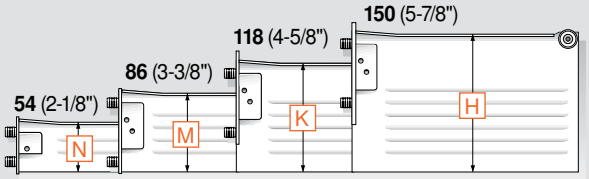

METABOX is available in white in four drawer heights, offering a multitude of design options.

Opening and closing information

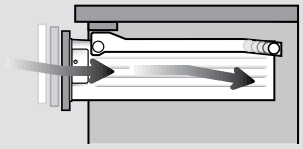

BLUMATIC self-closing action results from the angled drawer and cabinet profiles.

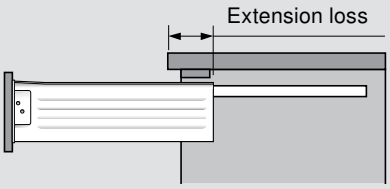

320 series 3/4 extension drawers have an extension loss when fully opened.

Drawer back and bottom preparation

METABOX “C15” version

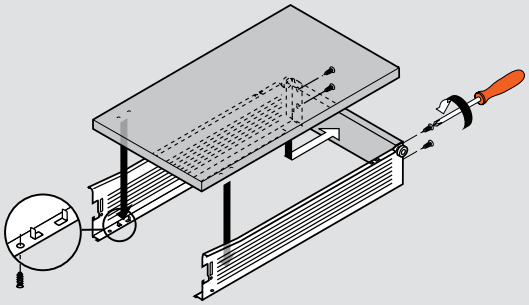

METABOX “C15” drawers can be assembled with the aid of the Universal boring template (page 29).

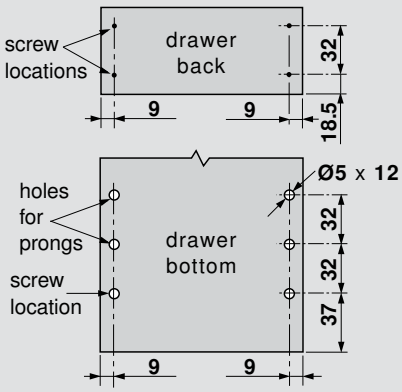

Boring for C15 drawer back and bottom
(for **13** (1/2") material, holes are **10** (3/8") deep)

© 2026 Blum, Inc. Subject to technical modifications without notice.

Drawer configurations

Standard drawer

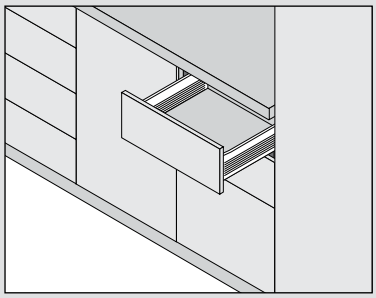

Standard drawer with gallery organization

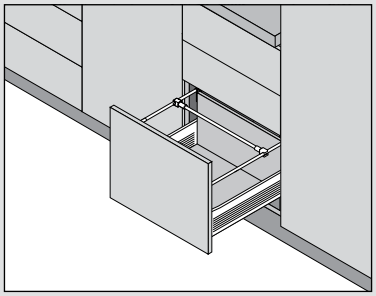

Interior roll-out trays

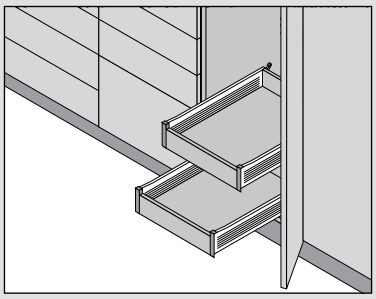

Components and accessories

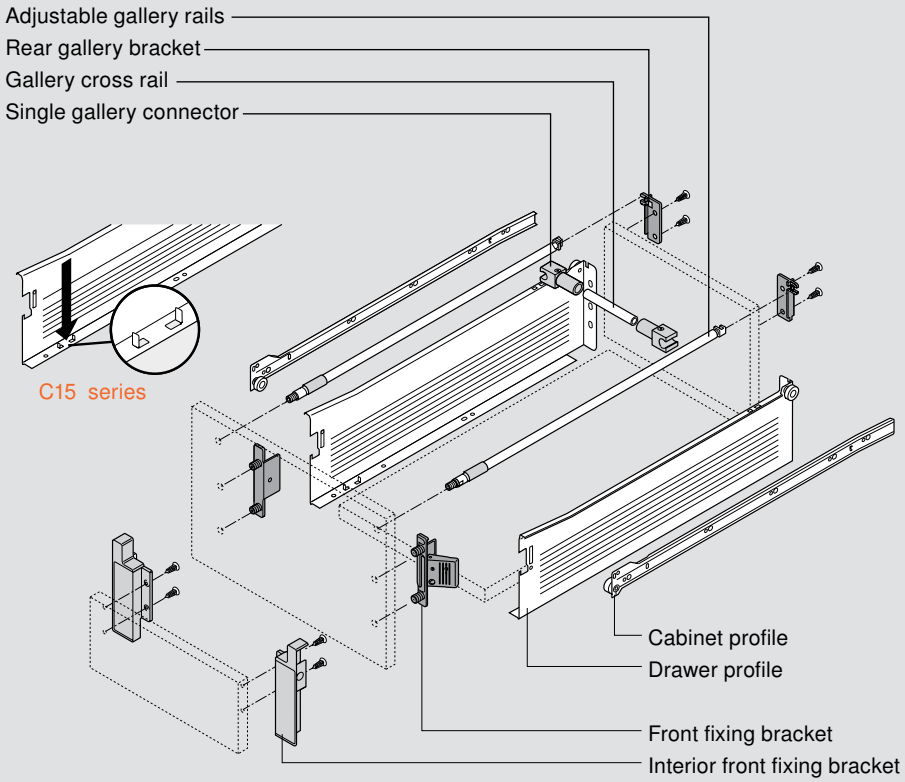

Interior drawer front assembly

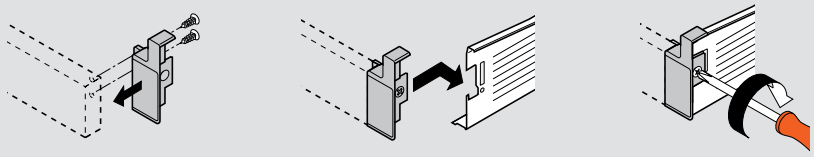

Drawer front assembly

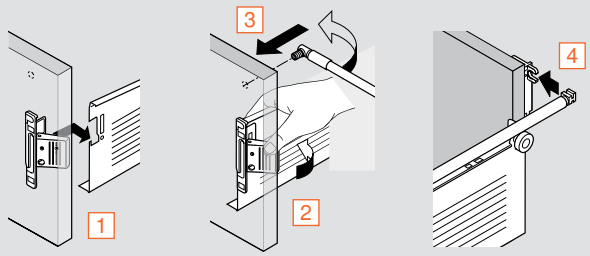

1 Insert front bracket
2 Snap closed
3 Insert gallery
4 Snap gallery back

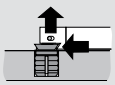

Removal

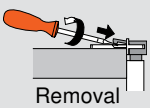

Removal

Drawer front adjustment

Side adjustment

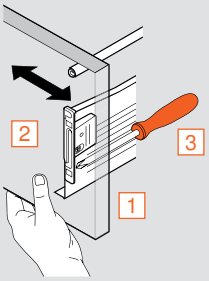

1 Loosen fixing screws
2 Adjust front
3 Tighten screws

Height and tilt adjustment

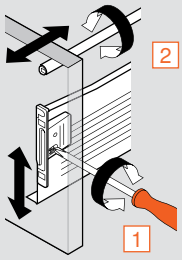

1 Adjust height cam
2 Turn rail to adjust tilt

 © 2026 Blum, Inc.

Components

C15 series

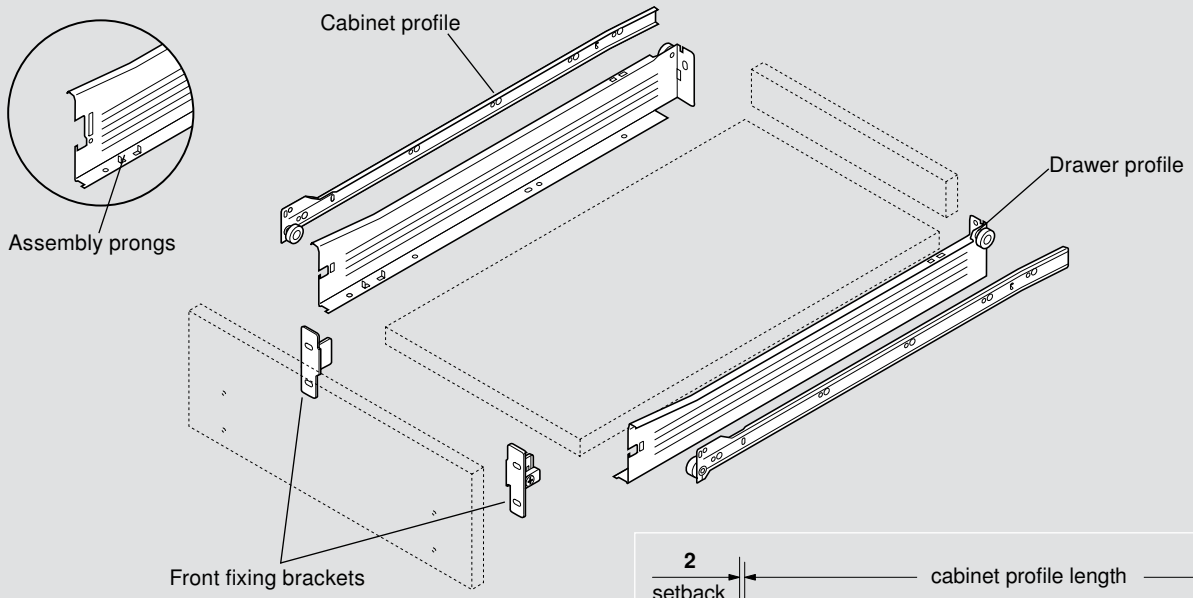

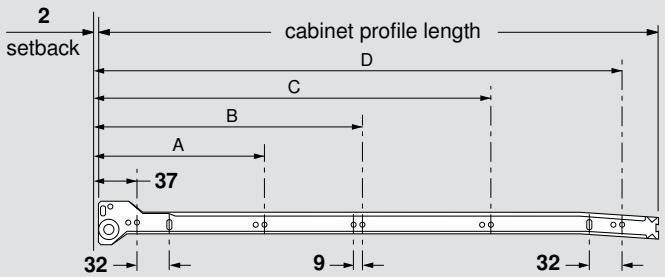

NOTE: Add-on BLUMOTION see page 22

Runner sets (includes cabinet and drawer profiles)

C15 series white	Nominal Length	Min. inside cabinet depth	Nominal length	System screw mounting hole positions			
				A	B	C	D
320N5500C15	22"	**557** (21-7/8")	**550** (21-5/8")	**165**	**261**	**389**	**517**
320N5000C15	20"	**507** (19-15/16")	**500** (19-11/16")	**165**	**261**	**389**	**453**
320N4500C15	18"	**457** (17-15/16")	**450** (17-11/16")	**165**	**261**	**389**	—
320N4000C15	16"	**407** (16")	**400** (15-3/4")	**165**	**261**	**357**	—
320N3500C15	14"	**357** (14")	**350** (13-3/4")	**165**	**261**	**325**	—

Standard front fixing bracket

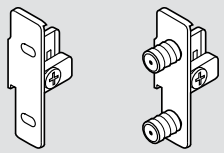

Nickel-plated steel

		Part no.
Screw-on	Right	**ZSF.1510.04**
	Left	**ZSF.1510.05**
Press-in	Right	**ZSF.1610.04**
	Left	**ZSF.1610.05**

© 2026 Blum, Inc. Subject to technical modifications without notice.

Specifications

Pre-bore holes for use with METABOX C15. **Ø5** x **10** (3/16" x 3/8") holes for **13** (1/2") material

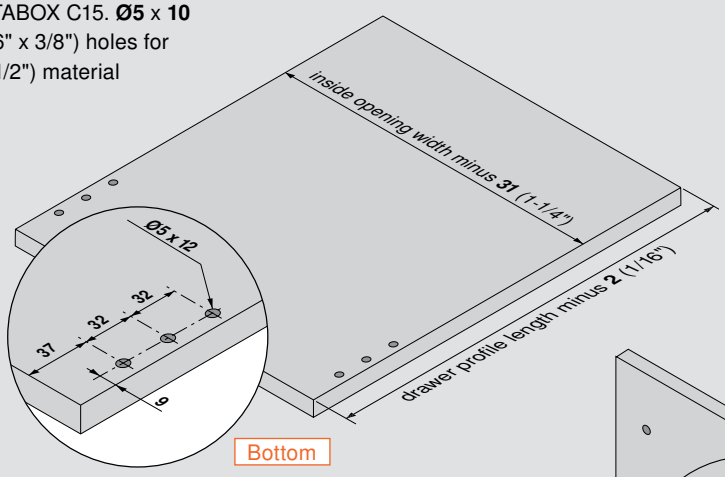

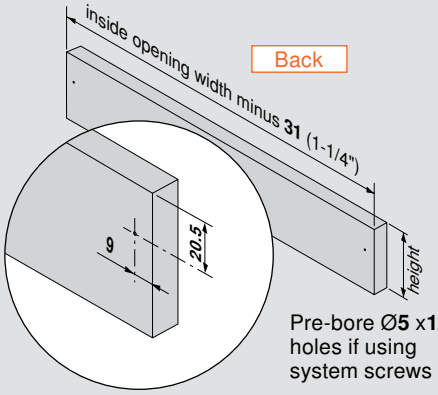

Pre-bore Ø**5** x**12** holes if using system screws

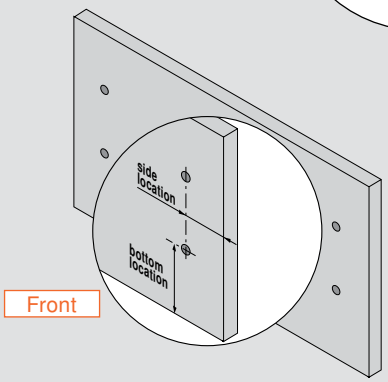

Nominal length	Bottom length
550 (21-5/8")	**548** (21-9/16")
500 (19-11/16")	**498** (19-5/8")
450 (17-11/16")	**448** (17-5/8")
400 (15-3/4")	**398** (15-11/16")
350 (13-3/4")	**348** (13-11/16")
270 (10-5/8")	**268** (10-9/16")

Drawer bottom thickness	Back height
13 (1/2")	**42** (1-5/8")
16 (5/8")	**39** (1-9/16")
19 (3/4")	**36** (1-7/16")

Bore **Ø10** x **12** (Ø3/8" x 1/2") hole for front fixing brackets with dowels
(Determine locations from specifications below, or see page 42 for pre-determined overlays)

Installation specifications

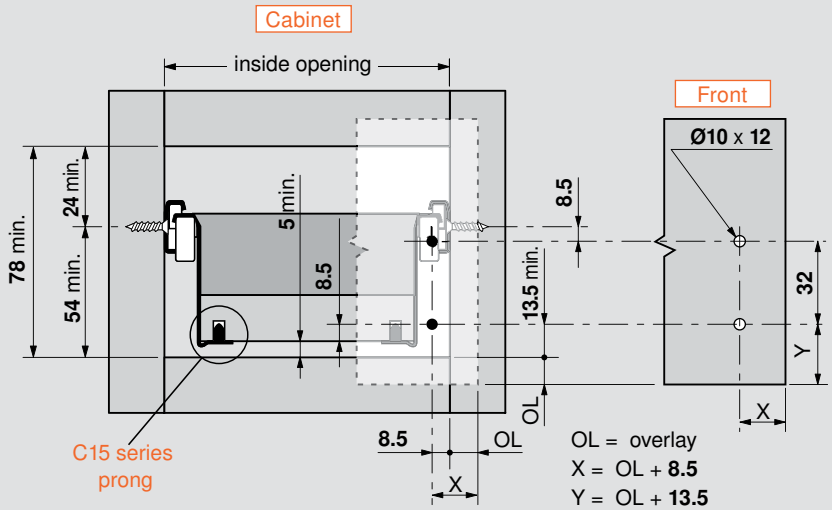

OL = overlay
X = OL + **8.5**
Y = OL + **13.5**

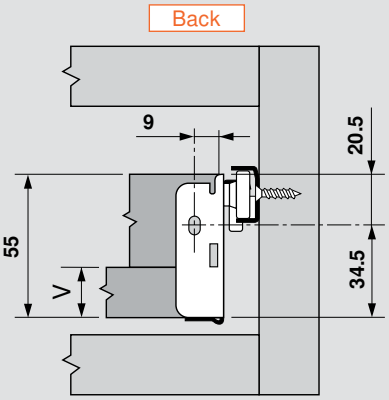

V = variable bottom thickness minimum **13** (1/2") material

Rear bracket for frame cabinet applications	page 35
For gallery rail specifications	page 16
For interior drawer specifications	page 19

 © 2026 Blum, Inc.

Components

C15 series

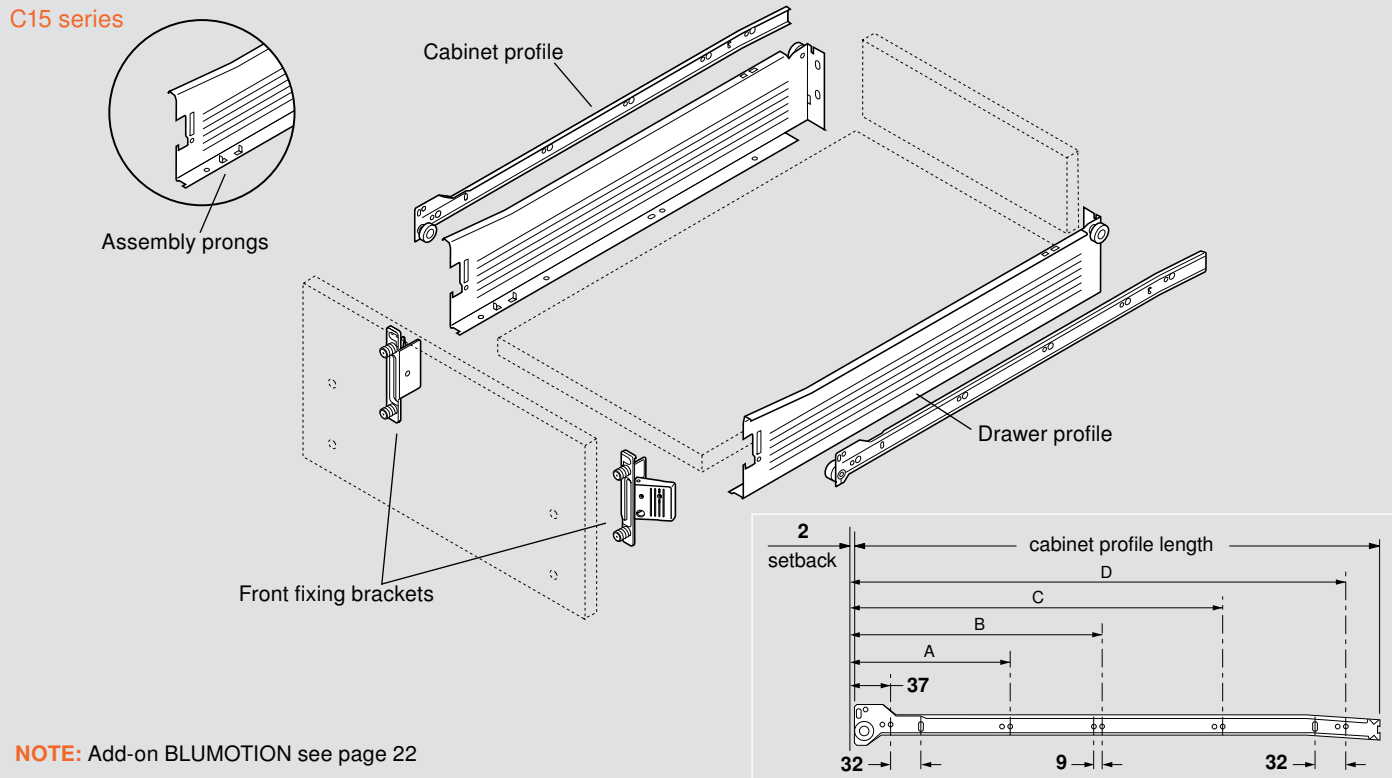

NOTE: Add-on BLUMOTION see page 22

Runner sets (includes cabinet and drawer profiles)

C15 series white	Nominal Length	Min. inside cabinet depth	Nominal length	System screw mounting hole positions			
				A	B	C	D
320M5500C15	22"	**557** (21-7/8")	**550** (21-5/8")	**165**	**261**	**389**	**517**
320M5000C15	20"	**507** (19-15/16")	**500** (19-11/16")	**165**	**261**	**389**	**453**
320M4500C15	18"	**457** (17-15/16")	**450** (17-11/16")	**165**	**261**	**389**	—
320M4000C15	16"	**407** (16")	**400** (15-3/4")	**165**	**261**	**357**	—
320M3500C15	14"	**357** (14")	**350** (13-3/4")	**165**	**261**	**325**	—
320M2700C15	11"	**277** (10-7/8")	**270** (10-5/8")	**229**	—	—	—

Standard front fixing bracket

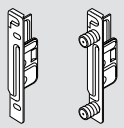

Nickel-plated steel

		Part no.
Screw-on	Right	**ZSF.1700 R**
	Left	**ZSF.1700 L**
Press-in	Right	**ZSF.1800 R**
	Left	**ZSF.1800 L**

CLIP front fixing bracket

Nickel-plated steel

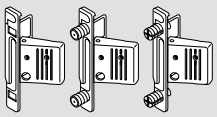

Screw-on	Right	**ZSF.1200 R**
	Left	**ZSF.1200 L**
Press-in	Right	**ZSF.1300 R**
	Left	**ZSF.1300 L**
EXPANDO	Right	**ZSF.130E R**
	Left	**ZSF.130E L**

Standard cover cap

Nylon white

NOTE: Blum logo cover caps available

ZAA.3500

© 2026 Blum, Inc. Subject to technical modifications without notice.

Specifications

Pre-bore holes for use with METABOX C15. **Ø5** x **10** (3/16" x 3/8") holes for **13** (1/2") material

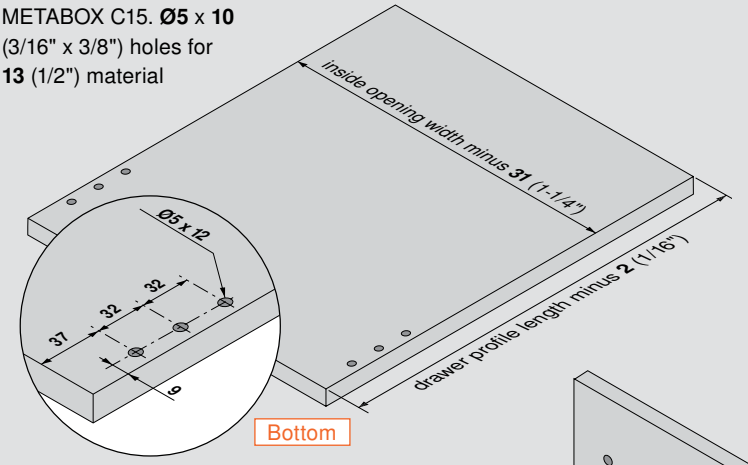

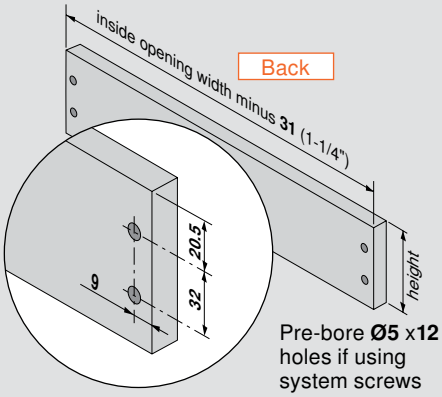

Pre-bore **Ø5** x**12** holes if using system screws

Material thickness	Back height
13 (1/2")	**74** (2-15/16")
16 (5/8")	**71** (2-13/16")
19 (3/4")	**68** (2-11/16")

Nominal length	Bottom length
550 (21-5/8")	**548** (21-9/16")
500 (19-11/16")	**498** (19-5/8")
450 (17-11/16")	**448** (17-5/8")
400 (15-3/4")	**398** (15-11/16")
350 (13-3/4")	**348** (13-11/16")
270 (10-5/8")	**268** (10-9/16")

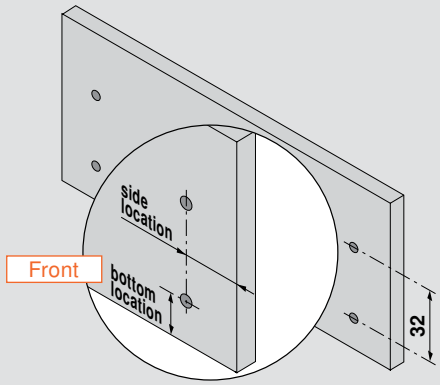

Bore **Ø10** x **12** (Ø3/8" x 1/2") hole for front fixing brackets with dowels
(Determine locations from specifications below, or see page 42 for pre-determined overlays)

Installation specifications

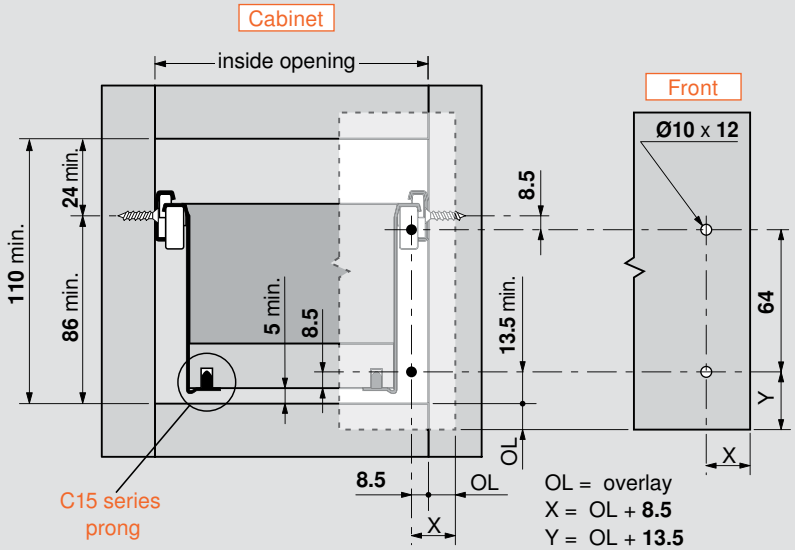

OL = overlay
X = OL + **8.5**
Y = OL + **13.5**

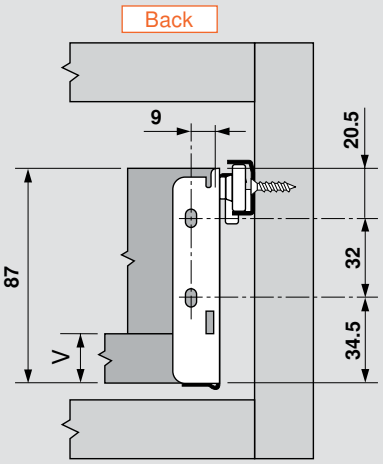

V = variable bottom thickness minimum

Rear bracket for frame cabinet applications	page 35
For gallery rail specifications	page 16
For interior drawer specifications	page 20

 © 2026 Blum, Inc.

Components

C15 series

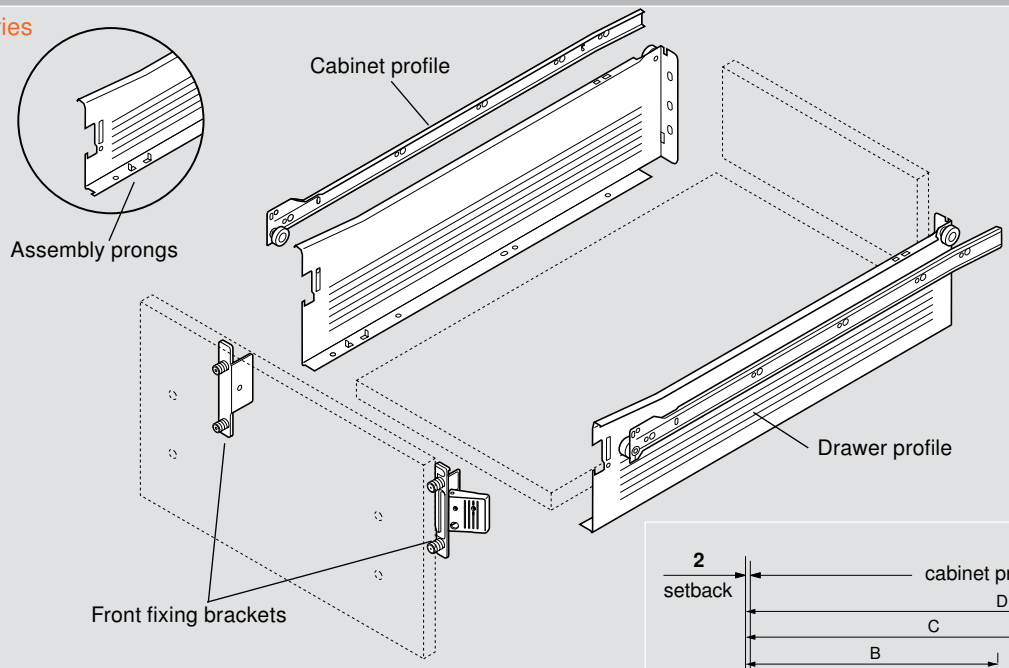

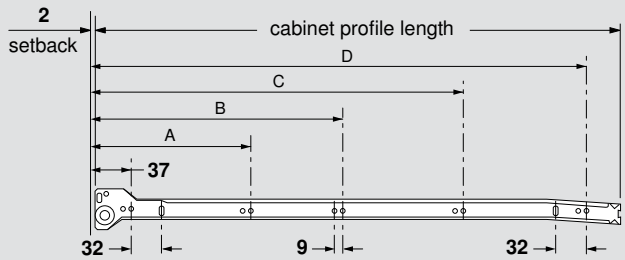

NOTE: Add-on BLUMOTION see page 22

Runner sets (includes cabinet and drawer profiles)

C15 series white	Nominal Length	Min. inside cabinet depth	Nominal length	System screw mounting hole positions			
				A	B	C	D
320K5500C15	22"	**557** (21-7/8")	**550** (21-5/8")	**165**	**261**	**389**	**517**
320K5000C15	20"	**507** (19-15/16")	**500** (19-11/16")	**165**	**261**	**389**	**453**
320K4500C15	18"	**457** (17-15/16")	**450** (17-11/16")	**165**	**261**	**389**	—
320K4000C15	16"	**407** (16")	**400** (15-3/4")	**165**	**261**	**357**	—
320K3500C15	14"	**357** (14")	**350** (13-3/4")	**165**	**261**	**325**	—

Standard front fixing bracket

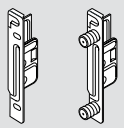

Nickel-plated steel

		Part no.
Screw-on	Right	**ZSF.1700 R**
	Left	**ZSF.1700 L**
Press-in	Right	**ZSF.1800 R**
	Left	**ZSF.1800 L**

CLIP front fixing bracket

Nickel-plated steel

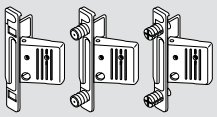

Screw-on	Right	**ZSF.1200 R**
	Left	**ZSF.1200 L**
Press-in	Right	**ZSF.1300 R**
	Left	**ZSF.1300 L**
EXPANDO	Right	**ZSF.130E R**
	Left	**ZSF.130E L**

Standard cover cap

Nylon white

NOTE: Blum logo cover caps available

ZAA.3500

© 2026 Blum, Inc. Subject to technical modifications without notice.

Specifications

Pre-bore holes for use with METABOX C15. **Ø5** x **10** (3/16" x 3/8") holes for **13** (1/2") material

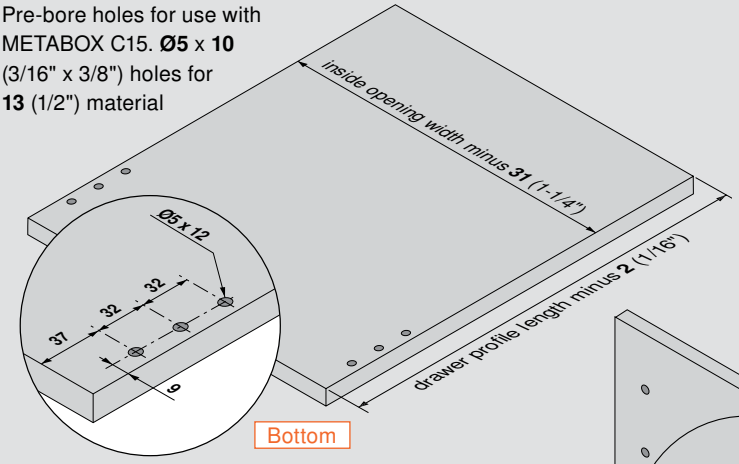

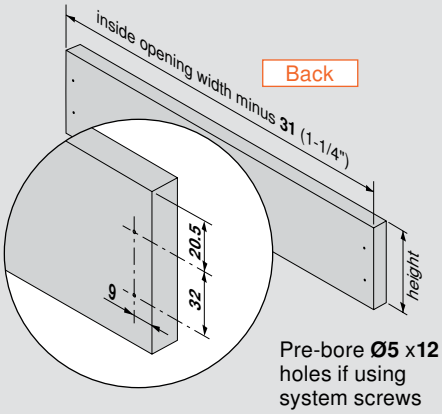

Pre-bore **Ø5** x**12** holes if using system screws

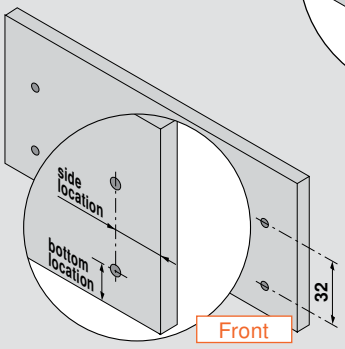

Nominal length	Bottom length
550 (21-5/8")	**548** (21-9/16")
500 (19-11/16")	**498** (19-5/8")
450 (17-11/16")	**448** (17-5/8")
400 (15-3/4")	**398** (15-11/16")
350 (13-3/4")	**348** (13-11/16")

Material thickness	Back height
13 (1/2")	**106** (4-3/16")
16 (5/8")	**103** (4-1/16")
19 (3/4")	**100** (3-15/16")

Bore **Ø10** x **12** (Ø3/8" x 1/2") hole for front fixing brackets with dowels
(Determine locations from specifications below, or see page 42 for pre-determined overlays)

Installation specifications

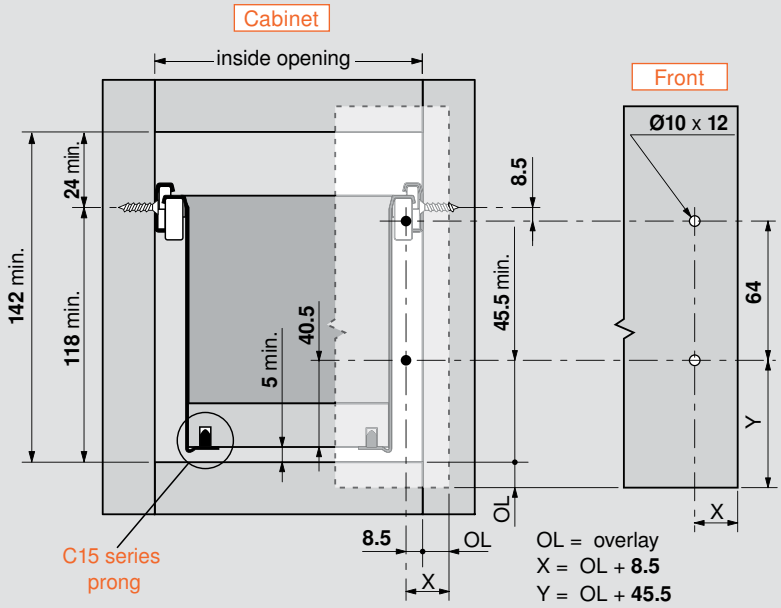

OL = overlay
X = OL + **8.5**
Y = OL + **45.5**

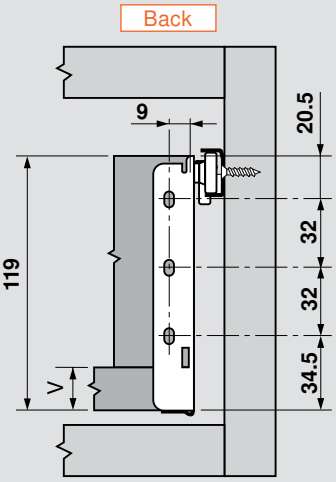

V = variable bottom thickness minimum

Rear bracket for frame cabinet applications page 35

For gallery rail specifications page 16

 © 2026 Blum, Inc.

Components

C15 series

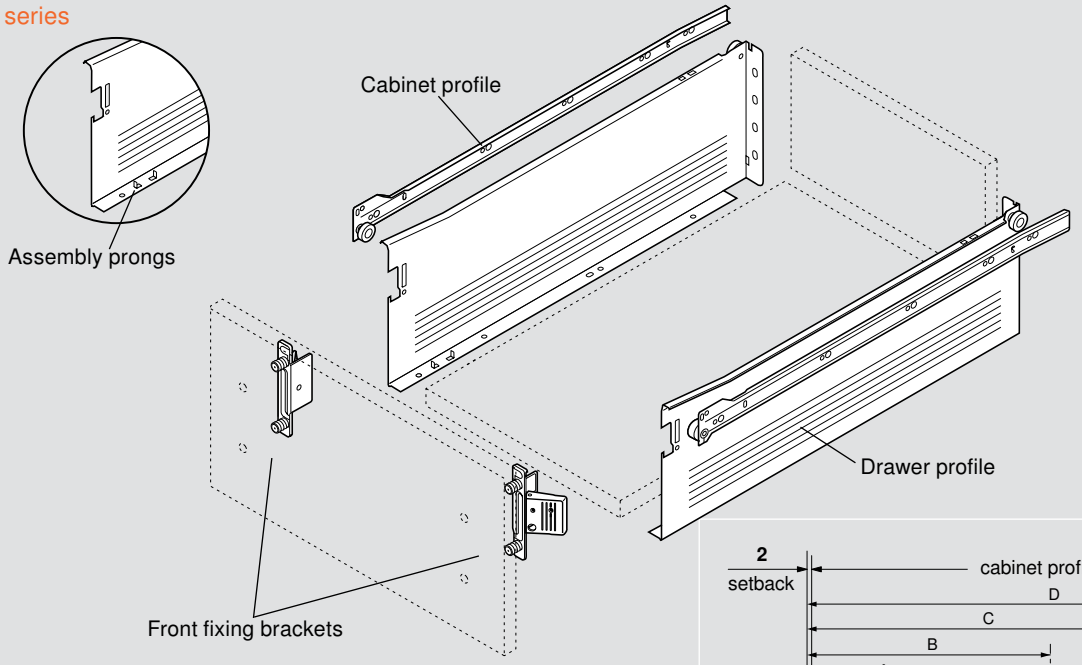

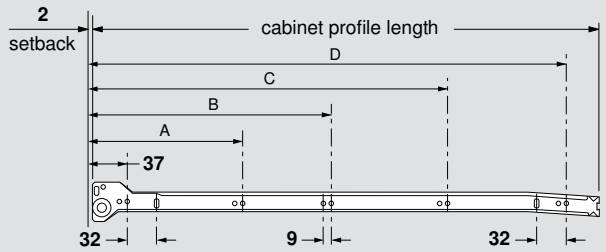

NOTE: Add-on BLUMOTION see page 22

Runner sets (includes cabinet and drawer profiles)

C15 series white	Nominal Length	Min. inside cabinet depth	Nominal length	System screw mounting hole positions			
				A	B	C	D
320H5500C15	22"	**557** (21-7/8")	**550** (21-5/8")	**165**	**261**	**389**	**517**
320H5000C15	20"	**507** (19-15/16")	**500** (19-11/16")	**165**	**261**	**389**	**453**
320H4500C15	18"	**457** (17-15/16")	**450** (17-11/16")	**165**	**261**	**389**	—
320H4000C15	16"	**407** (16")	**400** (15-3/4")	**165**	**261**	**357**	—
320H3500C15	14"	**357** (14")	**350** (13-3/4")	**165**	**261**	**325**	—

Standard front fixing bracket

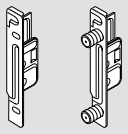

Nickel-plated steel

		Part no.
Screw-on	Right	**ZSF.1700 R**
	Left	**ZSF.1700 L**
Press-in	Right	**ZSF.1800 R**
	Left	**ZSF.1800 L**

CLIP front fixing bracket

Nickel-plated steel

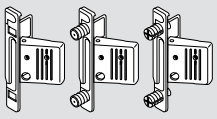

Screw-on	Right	**ZSF.1200 R**
	Left	**ZSF.1200 L**
Press-in	Right	**ZSF.1300 R**
	Left	**ZSF.1300 L**
EXPANDO	Right	**ZSF.130E R**
	Left	**ZSF.130E L**

Standard cover cap

Nylon white

NOTE: Blum logo cover caps available

ZAA.3500

© 2026 Blum, Inc. Subject to technical modifications without notice.

Specifications

Pre-bore holes for use with METABOX C15. **Ø5** x **10** (3/16" x 3/8") holes for **13** (1/2") material

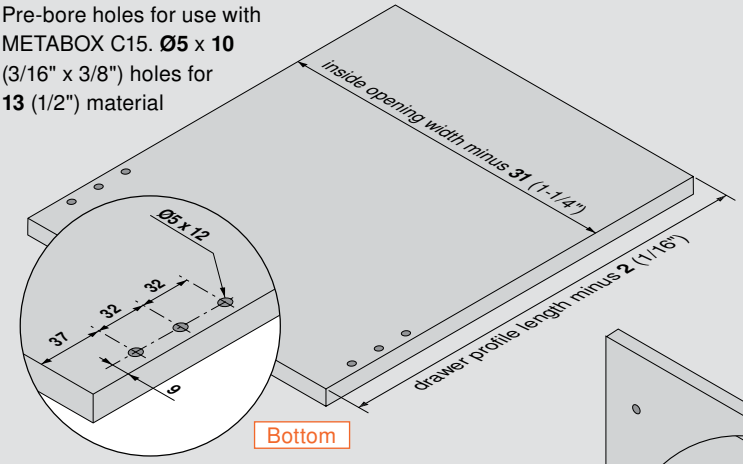

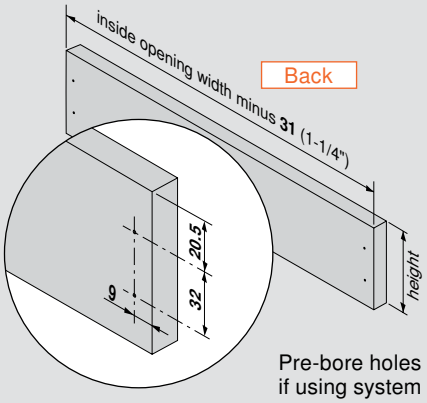

Pre-bore holes if using system screws

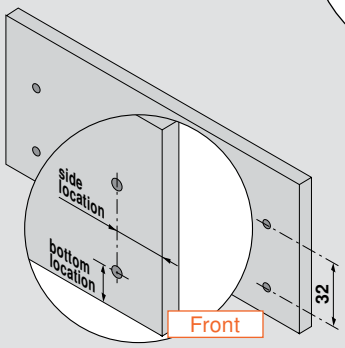

Nominal length	Bottom length
550 (21-5/8")	**548** (21-9/16")
500 (19-11/16")	**498** (19-5/8")
450 (17-11/16")	**448** (17-5/8")
400 (15-3/4")	**398** (15-11/16")
350 (13-3/4")	**348** (13-11/16")

Material thickness	Back height
13 (1/2")	**138** (5-7/16")
16 (5/8")	**135** (5-5/16")
19 (3/4")	**132** (5-3/16")

Bore **Ø10** x **12** (Ø3/8" x 1/2") hole for front fixing brackets with dowels
(Determine locations from specifications below, or see page 42 for pre-determined overlays)

Installation specifications

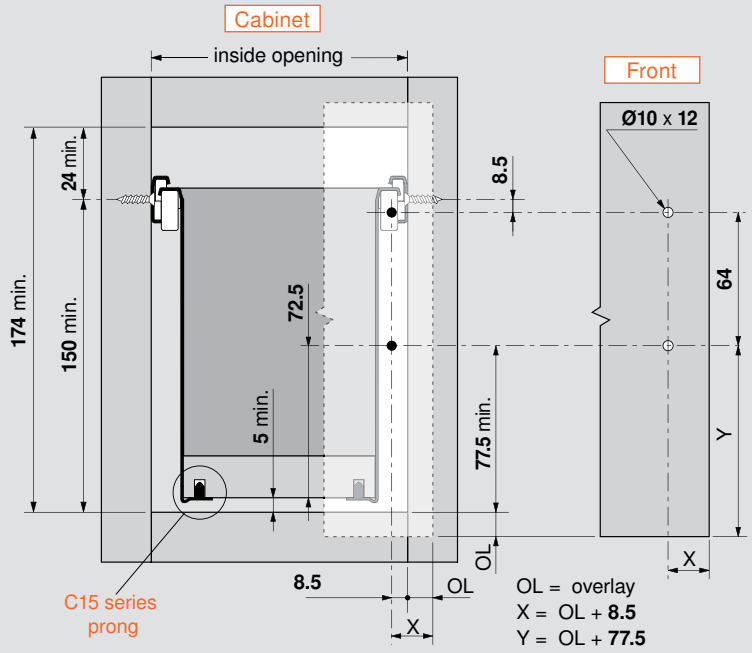

OL = overlay
X = OL + **8.5**
Y = OL + **77.5**

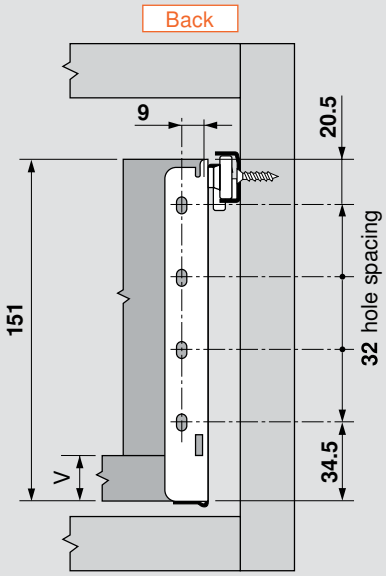

V = variable bottom thickness minimum

Rear bracket for frame cabinet applications	page 35
For gallery rail and BOXSIDE specifications	page 16
For interior drawer specifications	page 21

 © 2026 Blum, Inc.

Gallery components

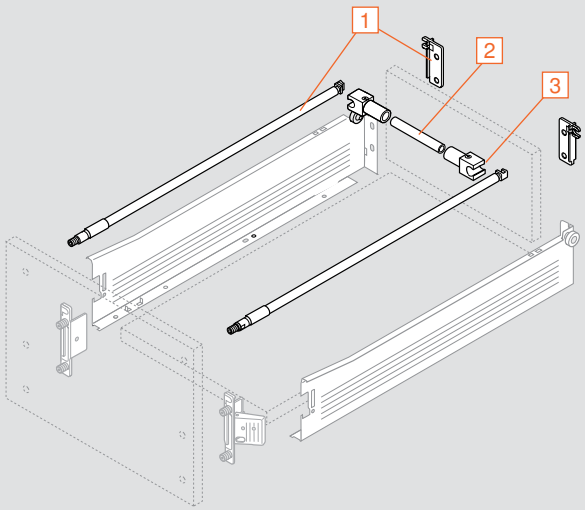

INSERTA gallery set

1

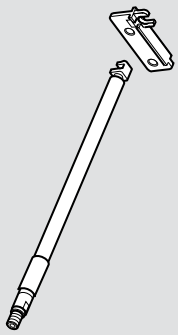

Set includes:

- Adjustable rails (qty 2)
- Rear fixing brackets (qty 2)
- Colors: white

	Part no.
450 (18") drawer length	**ZRE.421S.ID**
500 (20") drawer length	**ZRE.471S.ID**
550 (22") drawer length	**ZRE.521S.ID**

Gallery connector

3

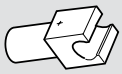

- Two required per gallery cross rail application
- Colors: dust gray

	Part no.
Gallery connector	**ZRU.00E0.01**

Gallery cross rail

2

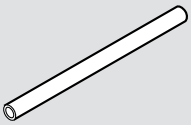

- **1104** (44") long, cut to length
- Colors: white
- Length = inside opening width minus **60** (2-3/8")

	Part no.
Gallery cross rail	**ZRG.1104U**

© 2026 Blum, Inc. Subject to technical modifications without notice.

320N installation specifications

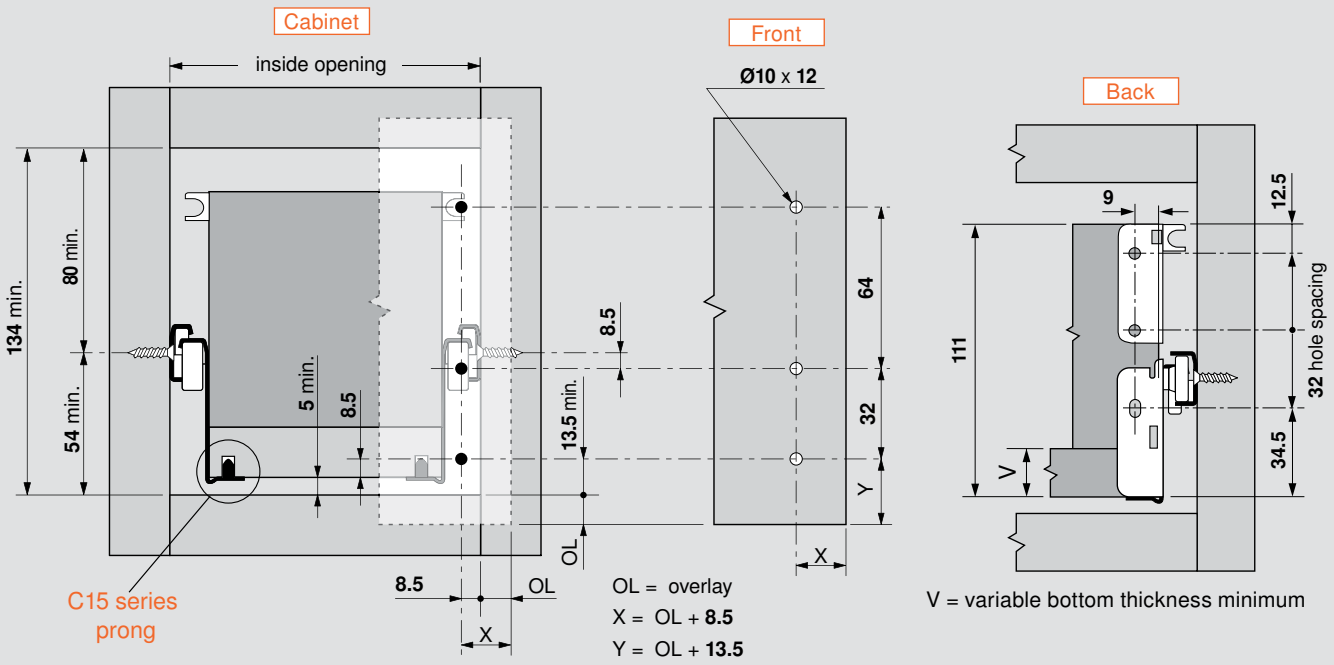

NOTE: For double gallery rail application add **64** (2-1/2") to opening and back height

320M installation specifications

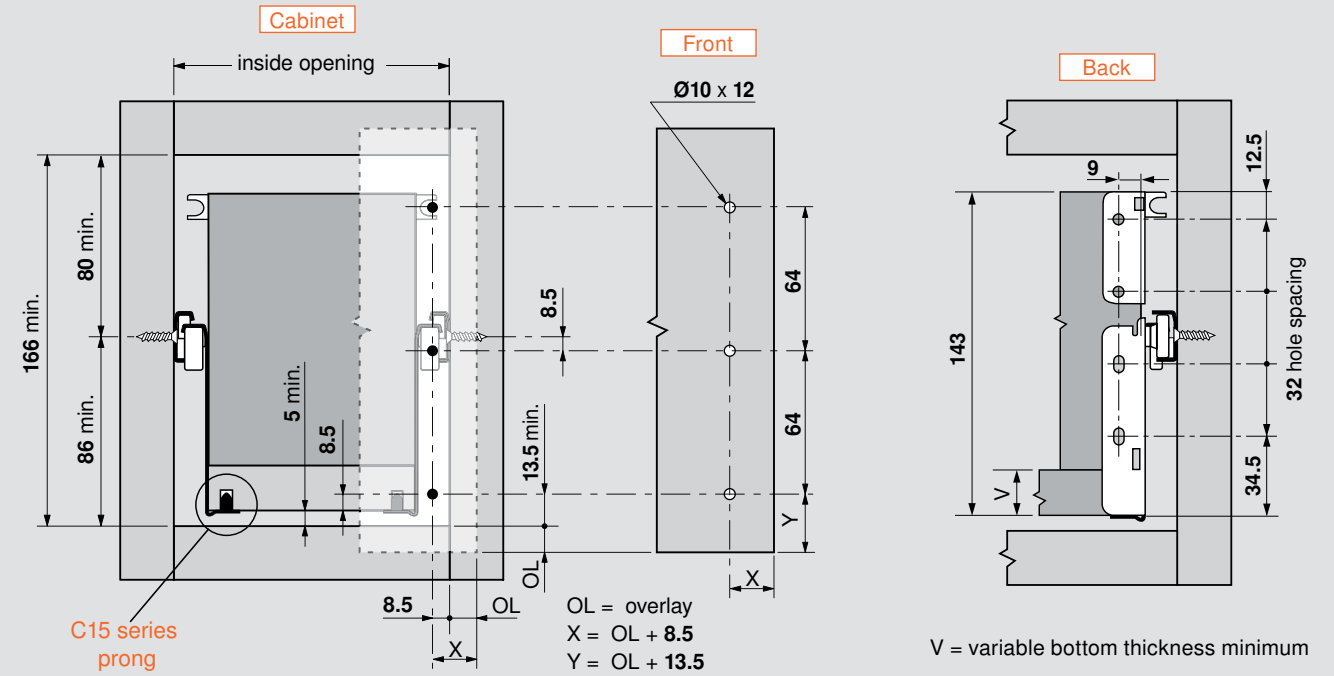

NOTE: For double gallery rail application add **64** (2-1/2") to opening and back height

 © 2026 Blum, Inc.

320K installation specifications

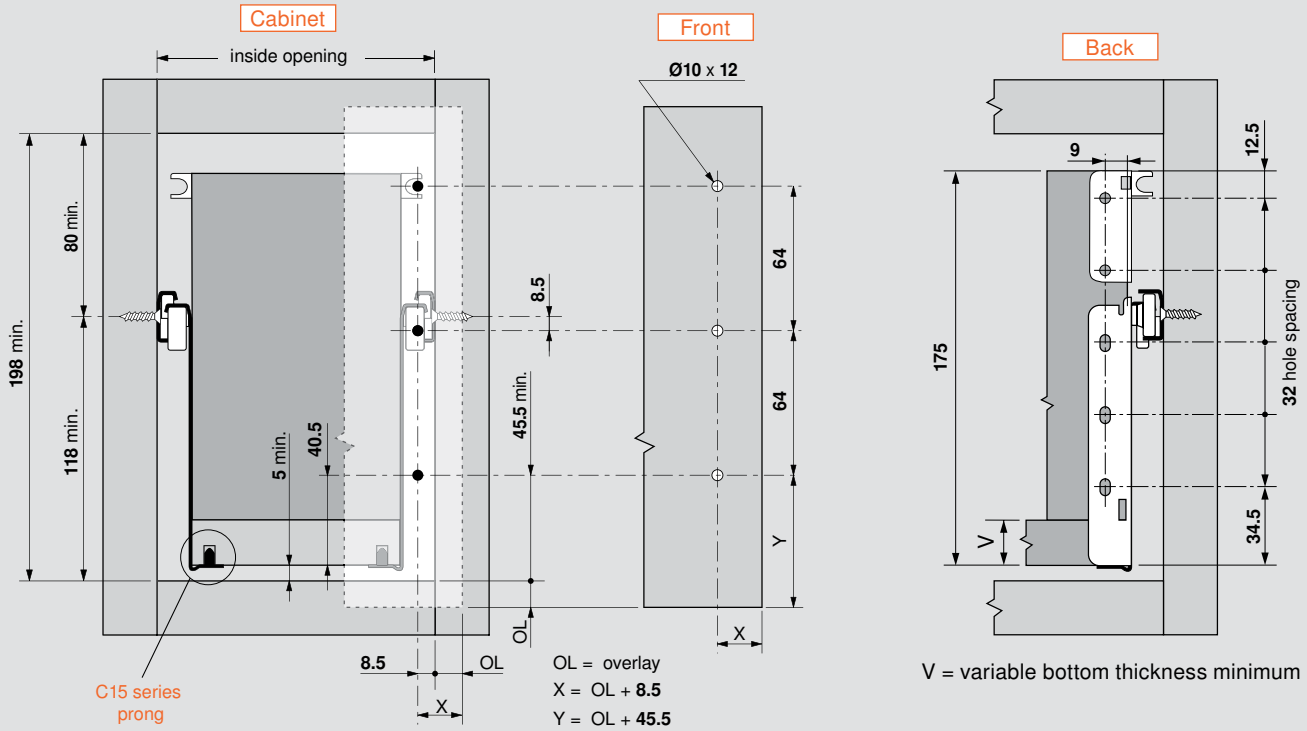

NOTE: For double gallery rail application add **64** (2-1/2") to opening and back height

320H installation specifications

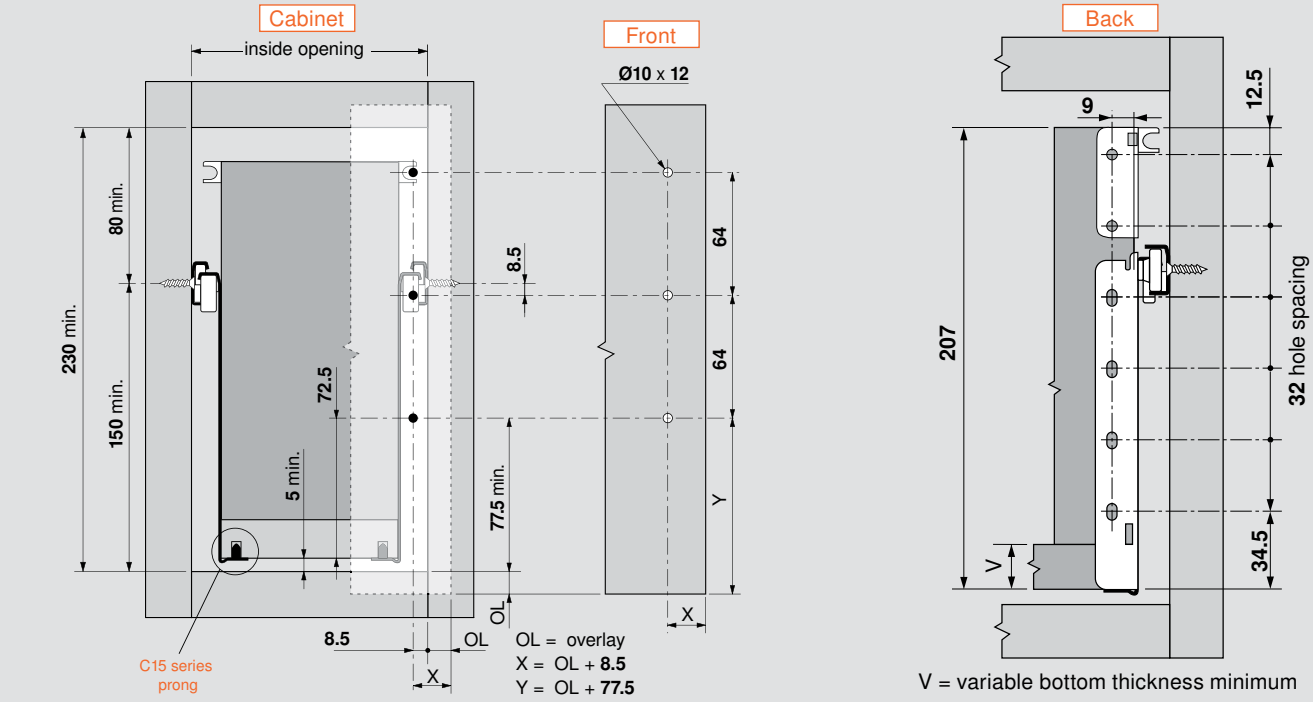

NOTE: For double gallery rail application add **64** (2-1/2") to opening and back height

© 2026 Blum, Inc. Subject to technical modifications without notice.

Components

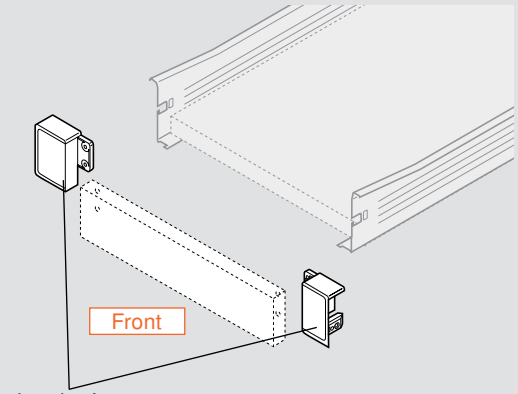

Interior front fixing brackets

Pre-bore holes for use with METABOX C15 prongs

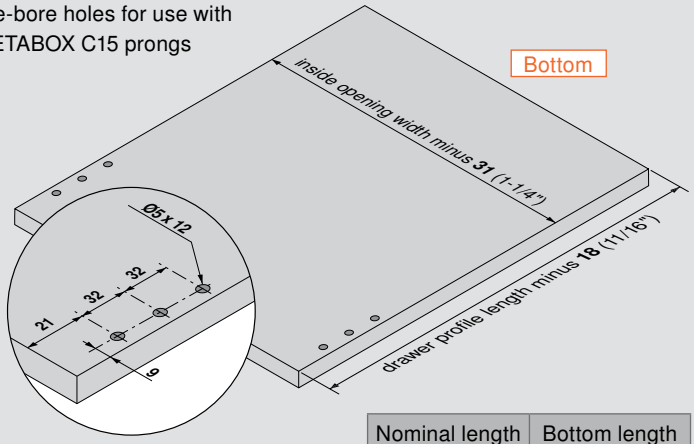

Nominal length	Bottom length
550 (21-5/8")	**532** (20-15/16")
500 (19-11/16")	**482** (19")
450 (17-11/16")	**432** (17")
400 (15-3/4")	**382** (15-1/16")
350 (13-3/4")	**332** (13-1/16")
270 (10-5/8")	**252** (9-15/16")

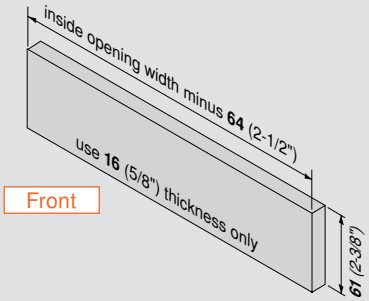

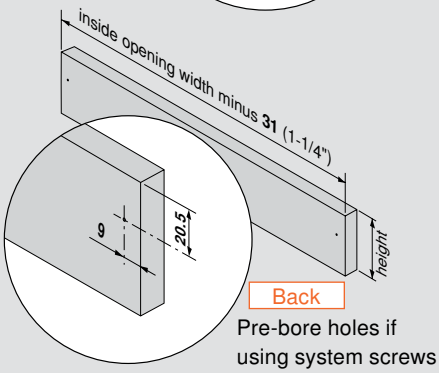

Pre-bore holes if using system screws

Bottom material thickness	Back height
13 (1/2")	**42** (1-5/8")
16 (5/8")	**39** (1-9/16")
19 (3/4")	**36** (1-7/16")

Screw-on interior front fixing bracket

Nylon		White	Part no.
		Right	**ZIF.3010.02**
		Left	**ZIF.3010.03**

Installation specifications

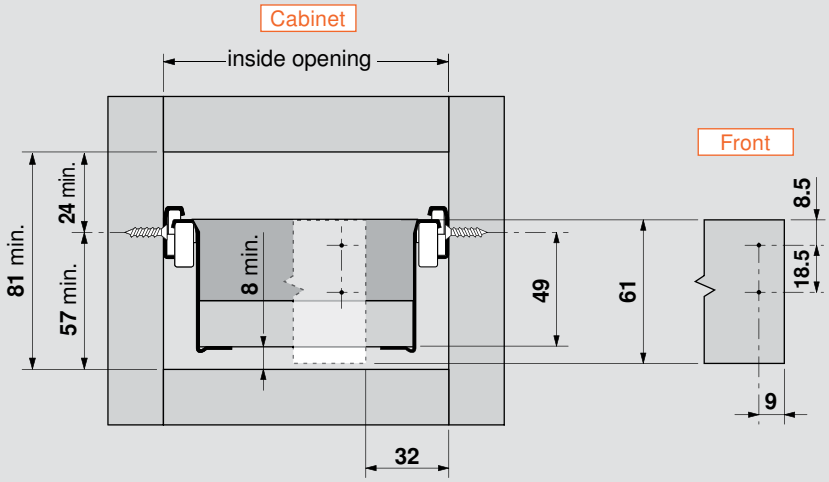

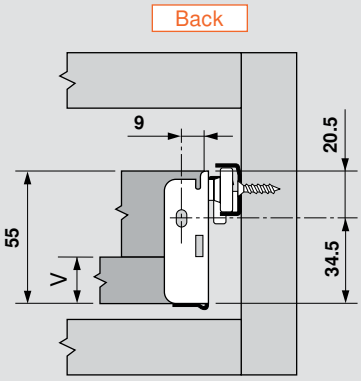

V = variable bottom thickness minimum

 © 2026 Blum, Inc.

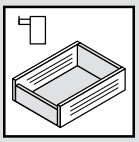

Components

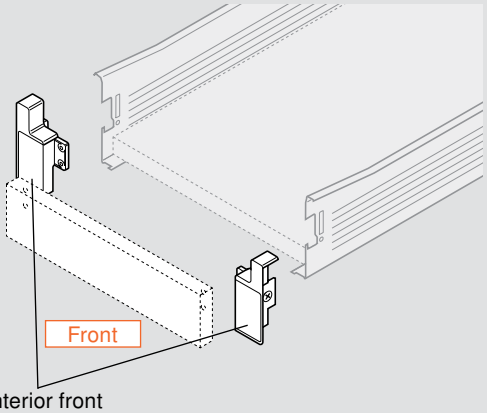

Interior front fixing brackets

Pre-bore holes for use with METABOX C15 prongs

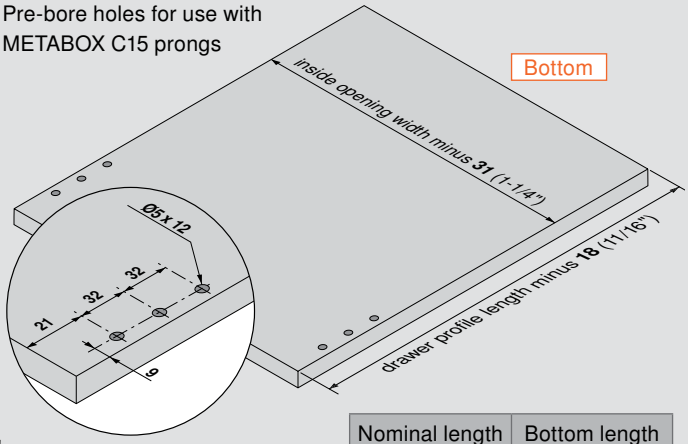

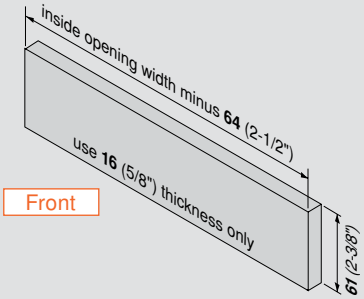

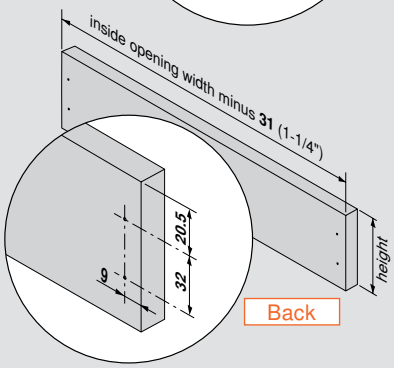

Pre-bore holes if using system screws

Nominal length	Bottom length
550 (21-5/8")	**532** (20-15/16")
500 (19-11/16")	**482** (19")
450 (17-11/16")	**432** (17")
400 (15-3/4")	**382** (15-1/16")
350 (13-3/4")	**332** (13-1/16")
270 (10-5/8")	**252** (9-15/16")

Bottom material thickness	Back height
13 (1/2")	**74** (2-15/16")
16 (5/8")	**71** (2-15/16")
19 (3/4")	**68** (2-11/16")

Screw-on interior front fixing bracket

Nylon	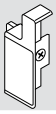	White	Part no.
		Right	**ZIF.3000.02**
		Left	**ZIF.3000.03**

Installation specifications

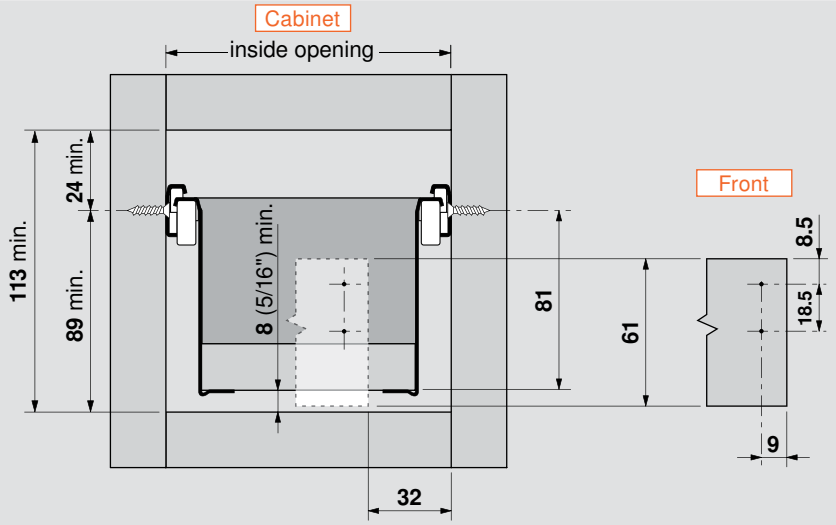

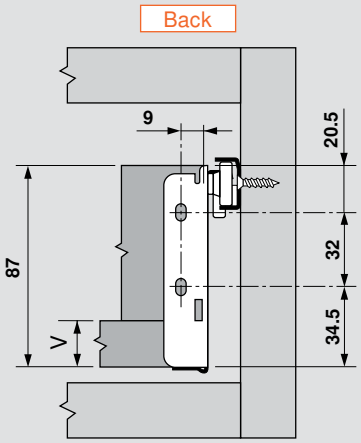

V = variable bottom thickness minimum

© 2026 Blum, Inc. Subject to technical modifications without notice.

Components

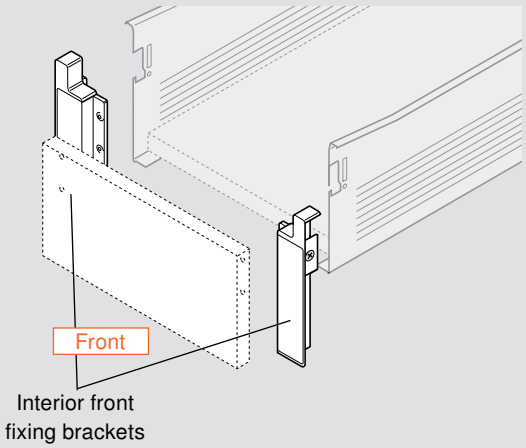

Pre-bore holes for use with METABOX C15 prongs

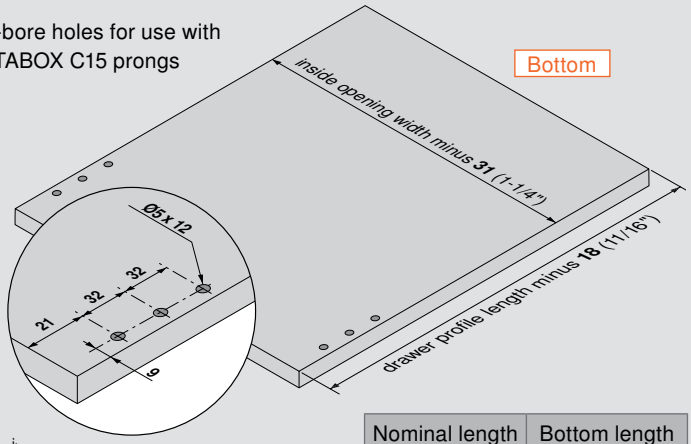

Nominal length	Bottom length
550 (21-5/8")	**532** (5-7/16")
500 (19-11/16")	**482** (19")
450 (17-11/16")	**432** (17")
400 (15-3/4")	**382** (15-1/16")
350 (13-3/4")	**332** (13-1/16")

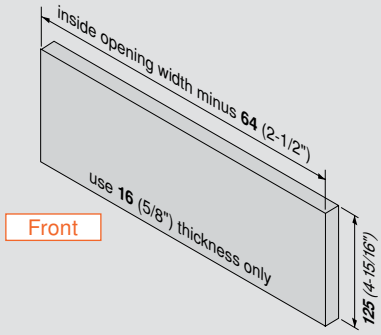

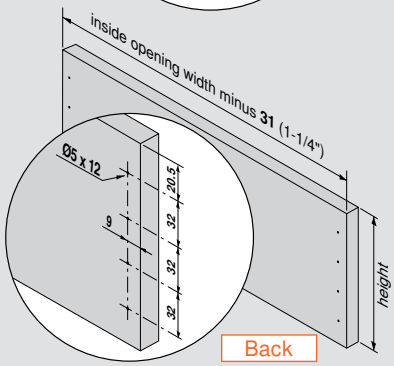

Pre-bore holes if using system screws

Bottom material thickness	Back height
13 (1/2")	**138** (5-7/16")
16 (5/8")	**135** (5-5/16")
19 (3/4")	**132** (5-3/16")

Screw-on interior front fixing bracket

Nylon	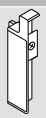	White	Part no.
		Right	**ZIF.3050 R**
		Left	**ZIF.3050 L**

Installation specifications

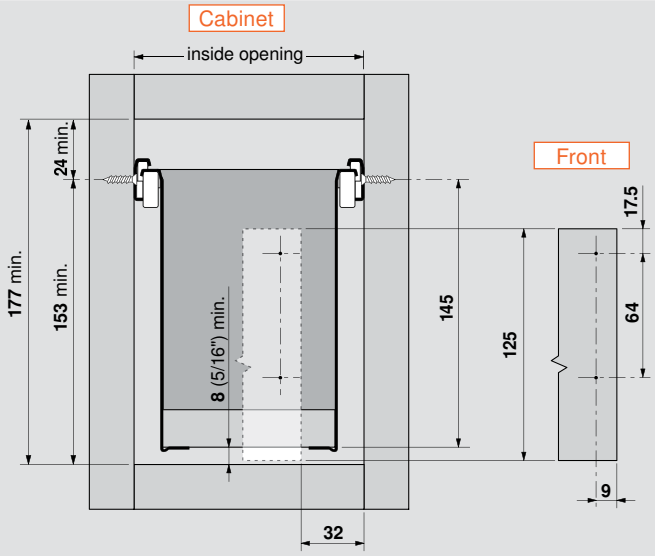

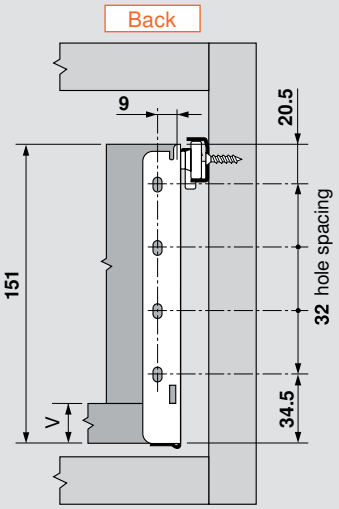

V = variable bottom thickness minimum

 © 2026 Blum, Inc.

BLUMOTION for METABOX

Application

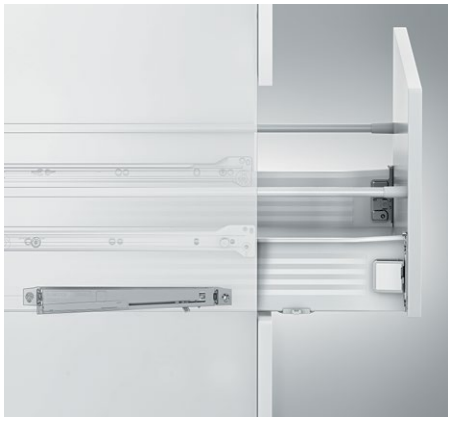

Features

- Soft closing mechanism for METABOX 320 series
- Designed for single extension C15 only
- Minimal opening force required
- One BLUMOTION required for cabinets up to 36" wide
- BLUMATIC self-closing and BLUMOTION in one mechanism

Required parts

BLUMOTION for METABOX set

Set includes:

- Gray mechanism
- White latch

	Part no.
BLUMOTION set	Z70.0320

Installation

BLUMOTION mechanism mounting

Only one BLUMOTION set required for cabinets up to 36" wide

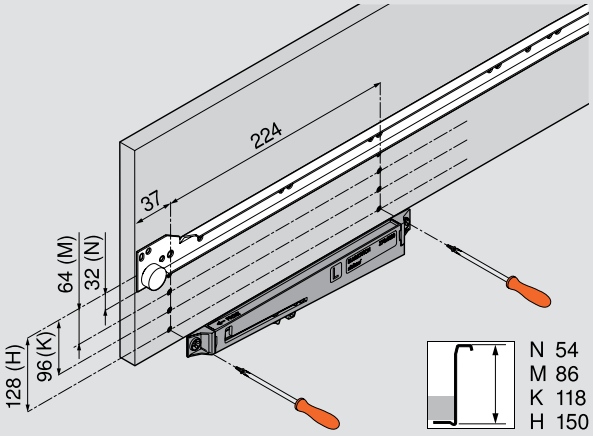

Installation screws	Part no.
#6 x 5/8", #2 wood screw (two required)	606N or 606P
#7 x 14.5 mm system screw (two required)	661.1450HG

Latch attachment

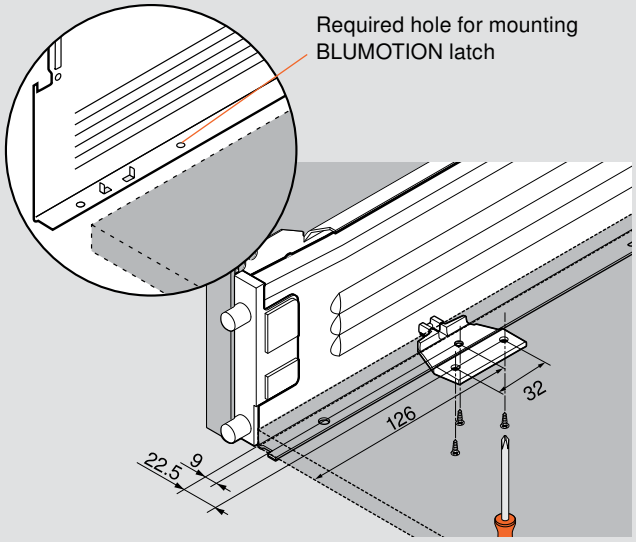

Installation screws	Part no.
#6 x 5/8", #2 wood screw (three required)	606N or 606P

BLUMOTION for METABOX attaches on the left side of the cabinet, below the cabinet profile.

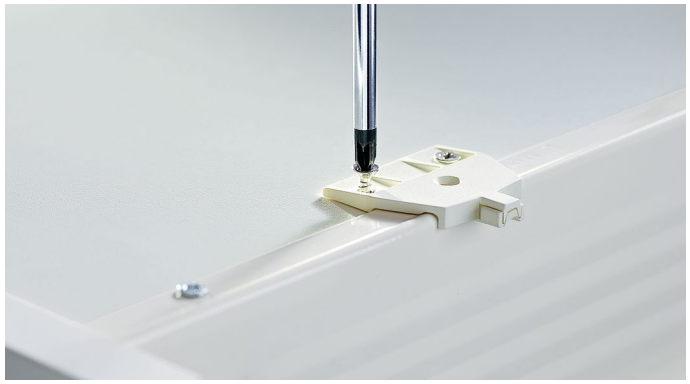

Two screws in the bottom and one in the drawer profile are required.

© 2026 Blum, Inc. Subject to technical modifications without notice.

Dimensions

Increased space beneath the drawer required

N height drawer

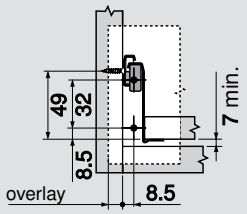

M height drawer

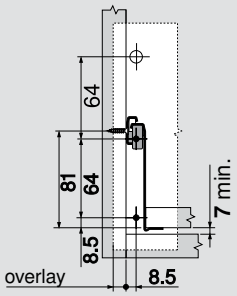

K height drawer

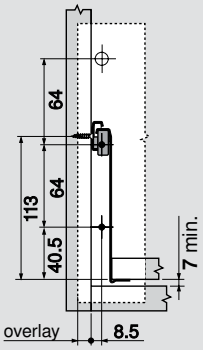

H height drawer

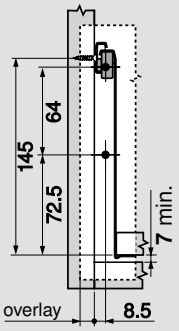

For drawers greater than 36" wide

Use two BLUMOTION for METABOX sets

1 After attaching the left mechanism, prepare the second BLUMOTION for attachment to the right side by removing the end brackets

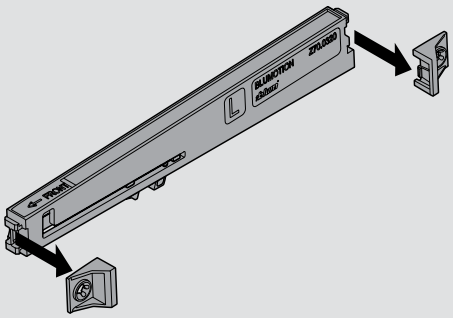

2 Rotate end brackets 180° and re-attach

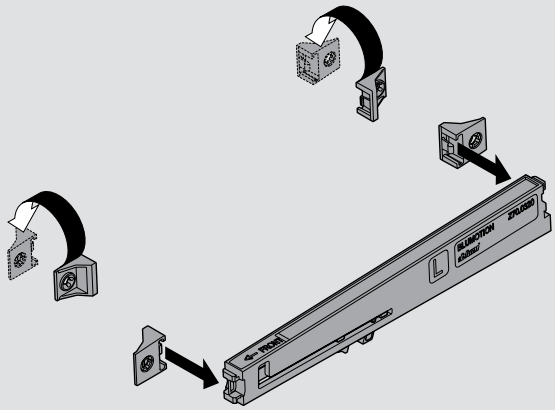

3 The BLUMOTION mechanism is now ready for attachment to the right side of the cabinet

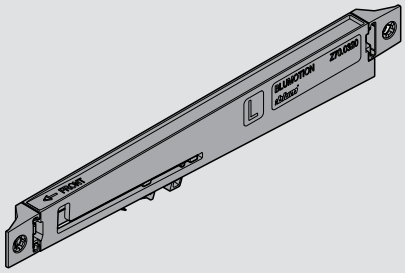

4 Attach with the installation screws shown

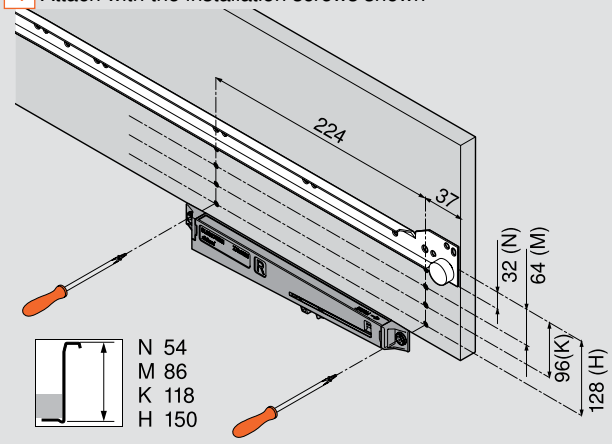

Installation screws	Part no.
#6 x 5/8", #2 wood screw (two required)	606N or 606P
#7 x 14.5 mm system screw (two required)	661.1450HG

NOTE: An additional latch is required on the right side of the drawer

 © 2026 Blum, Inc.

METAFILE set

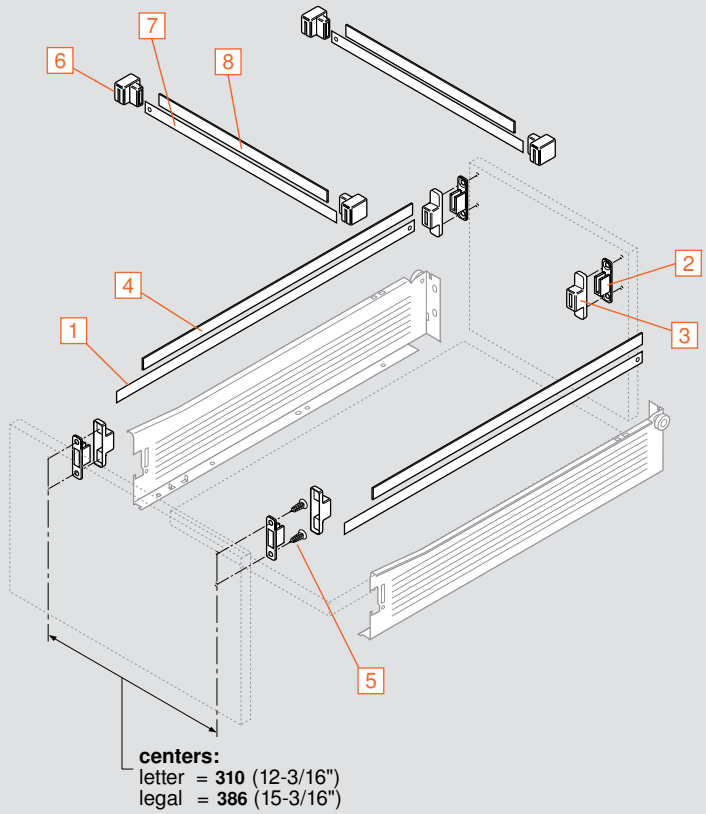

Includes components to make one standard hanging file system

Set includes:

1. Steel hanging rails (ZRM.550S) zinc coated, 3 x 13 x 550 (qty 2)
2. Rail support brackets (ZRM.0005)synthetic, natural color (qty 4)
3. Rail support covers (ZRM.0003) synthetic, white (qty 4)
4. Glide profiles (ZRM.550G) synthetic, white, 550 length (qty 2)
5. Flathead wood screws (6064N) nickel, #6 x 3/4" (qty 8)

	Part no
METAFILE set	ZRM.5500.US

Lateral file accessories

6. Lateral bracket synthetic, white

Four required per drawer	ZRM.0004.10

7. Steel hanging rail zinc coated, 3 x 13 x 1100 cut to length

Hanging rail	ZRM.1100S

8. Glide profile synthetic, white, 1100 mm long, cut to length

Glide profile	ZRM.1100G

Assembly and installation specifications

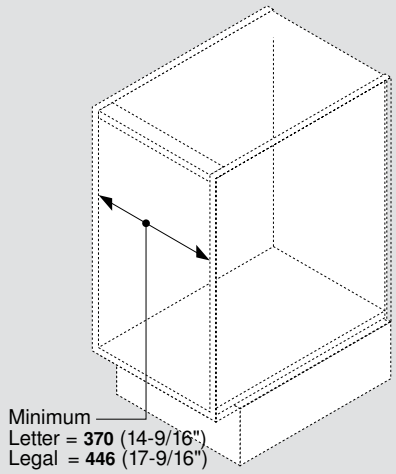

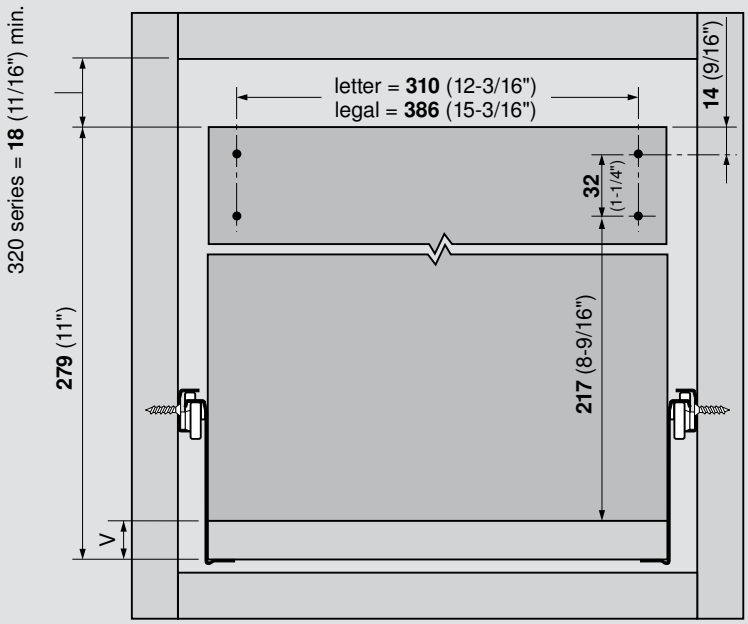

V = variable bottom thickness minimum

© 2026 Blum, Inc. Subject to technical modifications without notice.

Drawer front marking gauges

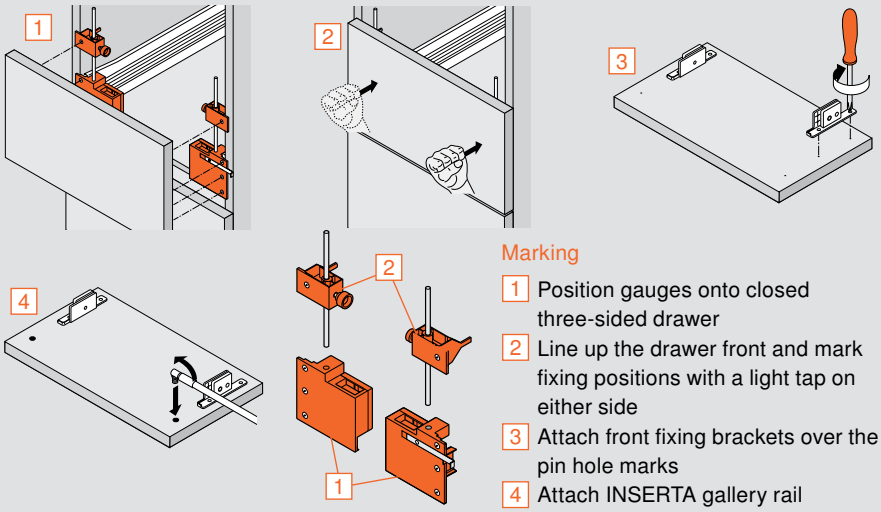

Marking

1. Position gauges onto closed three-sided drawer
2. Line up the drawer front and mark fixing positions with a light tap on either side
3. Attach front fixing brackets over the pin hole marks
4. Attach INSERTA gallery rail

For marking all front fixing bracket positions including drawers with galleries.

Standard marking gauge set	Part no.
For METABOX 320N, K, H	ZML.1500
For METABOX 320N	ZML.1510
Gallery marking gauge set (qty 2) - Rod with adjustable marking gauges	
Gauge set	ZML.8000.02

Universal boring template

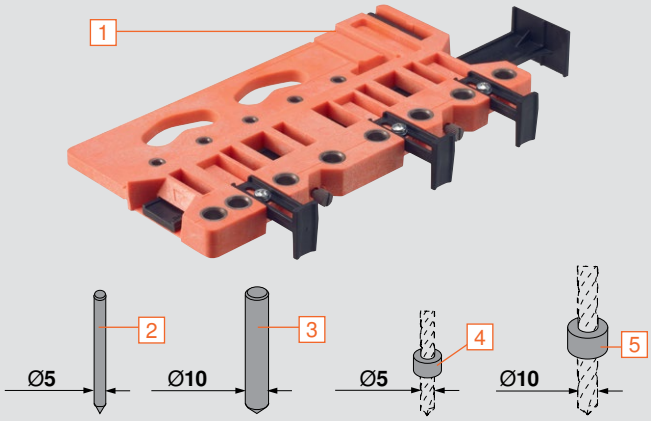

Set includes:

1. Template
2. **Ø5** marking pin
3. **Ø10** marking pin
4. **Ø5** stop collar
5. **Ø10** stop collar

- Used for boring drawer fronts, located all fixing positions
- Used to pre-bore for drawer fronts, bottoms and backs for LEGRABOX, TANDEMBOX and METABOX drawer systems, also AVENTOS mounting plates

	Part no.
Universal boring template	ZML.0040.01
Ø5 drill bit	DB-5mm
Ø10 drill bit	DB-10mm

 © 2026 Blum, Inc.

Cabinet profile template

- Used for pre-boring holes for LEGRABOX, TANDEMBOX, and TANDEM drawer runners
- Can also be used to pre-bore AVENTOS locating pins and pre-boring for hinge mounting plates

	Part no.
Cabinet profile template	65.1000.01
Replacement template	65.1001.01
Ø**2.5** drill bit	DB-2.5mm

Components

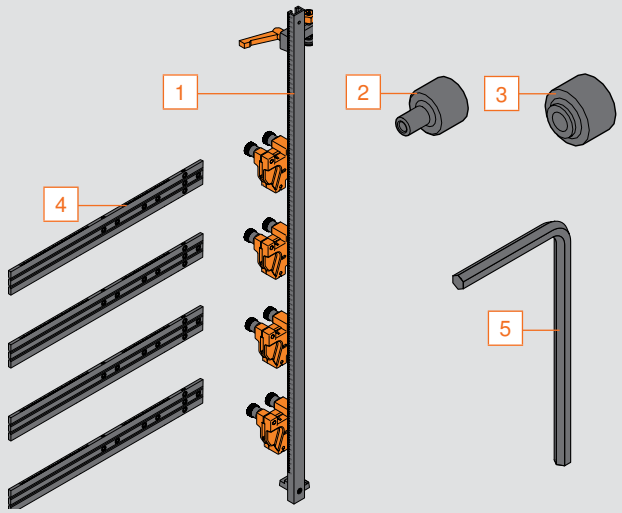

Cabinet profile template includes:

1. Rail, 1 meter long (qty 1)
2. Ø**2.5** stop collar (qty 1)
3. Ø**5** stop collar (qty 1)
4. Replacement template (qty 4)
5. Allen wrench (qty 1)

© 2026 Blum, Inc. Subject to technical modifications without notice.

Universal individual template

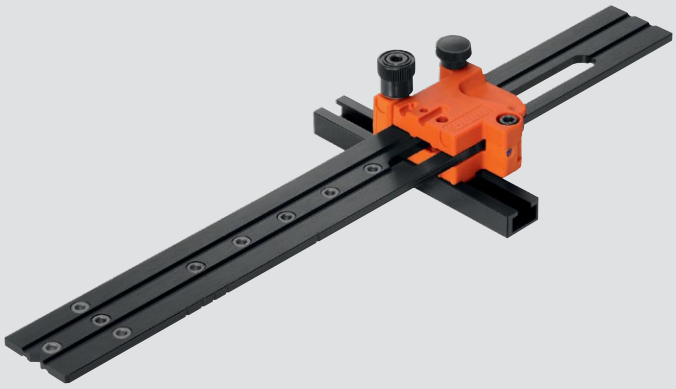

- Used for pre-boring holes for LEGRABOX, TANDEMBOX, and TANDEM drawer runners
- Can also be used to pre-bore for AVENTOS locating pins and pre-boring for hinge mounting plates
- Calibrated scales for accurate setting

Set includes:

- Universal individual template
- Ø**2.5** and Ø**5** stop collars

	Part no.
Universal individual template	**65.1051.02**
Ø**2.5** drill bit	**DB-2.5mm**

Pre-boring for cabinet profile mounting holes

1 Mark position

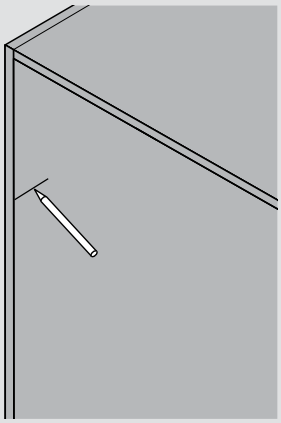

2 Line up template with mark and pre-bore required holes

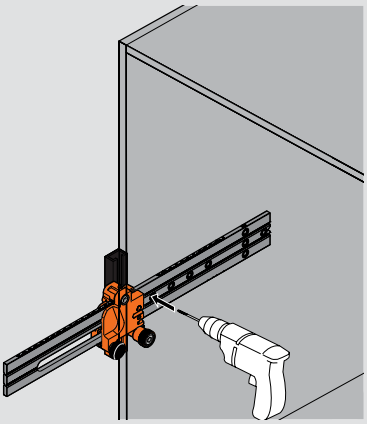

3 Attach runner

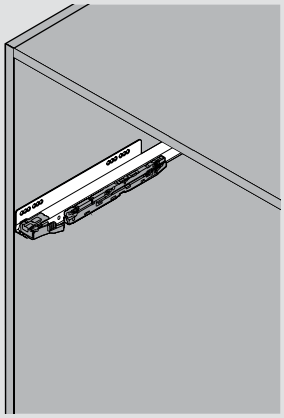

MINIFIX

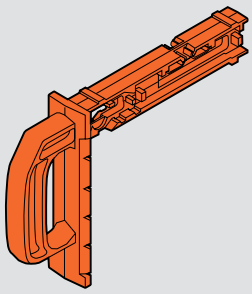

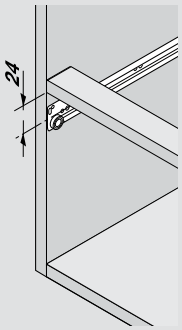

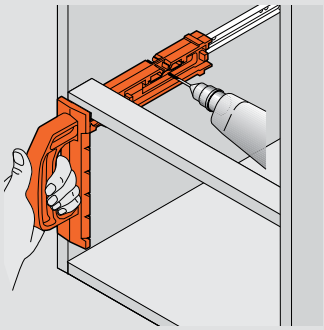

For precise positioning of cabinet profile fixing screws.

- For METABOX series 320N, M, K, H
- For runners 230M

	Part no.
MINIFIX	**65.3300**

 © 2026 Blum, Inc.

Machines

MINIPRESS P — Deluxe boring and insertion machine

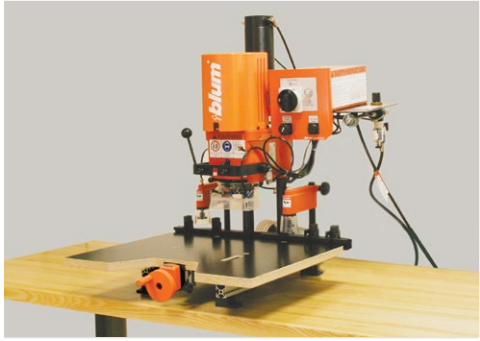

- Front adjustable boring distance with digital counter
- Pneumatic hold-down clamps
- Boring depth adjustment
- Ruler stops (qty 4)
- Tool kit included
- Dust collection attachment
- Optional laser center line set
- Accepts new 8 or 9 spindle heads

	Part no.
Single phase — 220V power	M53.1053*US
Three-phase — 220V power	M53.1004*US

MINIPRESS M — 110V manual boring and insertion machine

- 110V power with molding plug (portable)
- Does not require pressurized air
- Ruler stops (qty 4)
- Tool kit included
- Dust collection attachment
- Accepts 8 or 9 spindle heads

	Part no.
Single phase — 110V power	M52.1056*US

EASYSTICK

- Automatically moves stops for exact drilling locations for all Blum products
- Built-in cabinet configurator for cabinet design with integrated Blum hardware
- Available as upgrade for MINIPRESS P (models 2007 and newer)

	Part no.
Computer	MZD.5000
Fence - overall 1700mm*	MZD.2000
Fence extensions - additional 1700**	MZD.2V00
Support for extension ruler	M2V.2E00

* Maximum position 953mm from center
** 1700 each side

Optional items

	Part no.
Laser center line set	MZR.5300.US

© 2026 Blum, Inc. Subject to technical modifications without notice.

8 spindle head

- 8 spindle head for use with MINIPRESS/MINIDRILL M53
- Bores eight holes spaced **32** apart, perpendicular to the fence
- Quick-disconnect chucks
- Once aligned, does not require additional adjustment
- Bores all METABOX/TANDEMBOX/LEGRABOX front fixing brackets and galleries
- Bores cabinet side panels for all Blum runner systems
- Requires retrofit set for use with machines produced in 2009 or prior

Includes:

- **Ø3** allen wrench
- Distance spacer
- Drive pin
- Air hose

	Part no.
8 spindle head	MZK.880S
Chuck cover cap	M30.1329

9 spindle head

- 9 spindle head for use with MINIPRESS/MINIDRILL M53
- Bores nine holes spaced **32** apart, parallel to the fence
- Quick-disconnect chucks
- Once aligned, does not require additional adjustment
- Bores cabinet side panel for **32** milimeter system boring for Blum mounting plates and runners
- Requires retrofit set for use with machines produced in 2009 or prior

Includes:

- **Ø3** allen wrench
- Distance spacer
- Drive pin
- Air hose

	Part no.
9 spindle head	MZK.190S
Chuck cover cap	M30.1329

 © 2026 Blum, Inc.

Installation tools

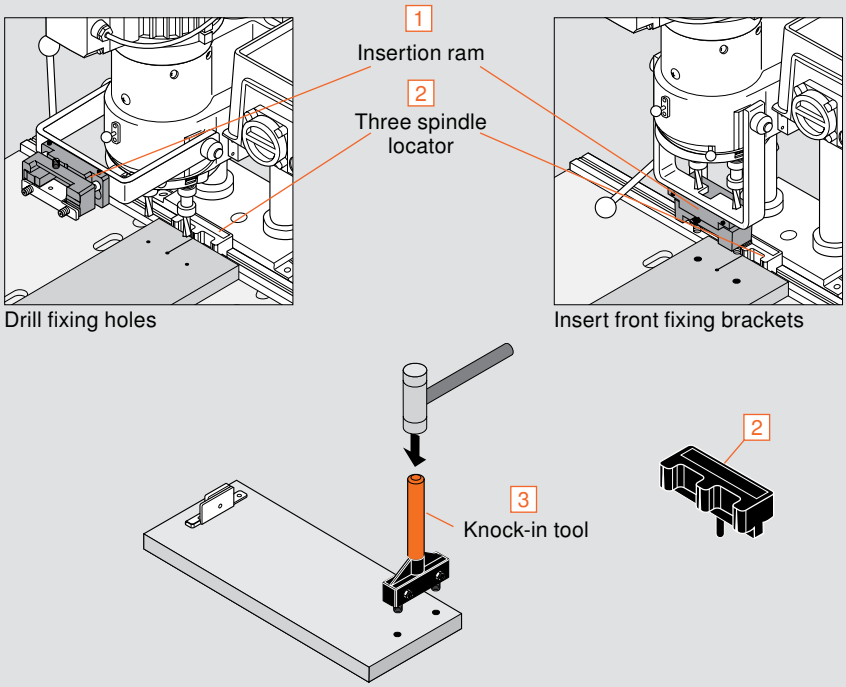

For location and insertion of front fixing brackets.

Three spindle locator enables the positioning of the drawer front without using fence stops (not for use with hinge insertion).

	Part no.
1 Insertion ram for MINIPRESS	
ZSF.1300 and ZSF.1800	MZM.0092.01
2 Three spindle locator	MZR.2000
3 Knock-in tool	
ZSF.1300 and ZSF.1800	ZME.1600.01
3 Knock-in tool	
ZSF.1610	ZME.1610

MINISTICK fence stop

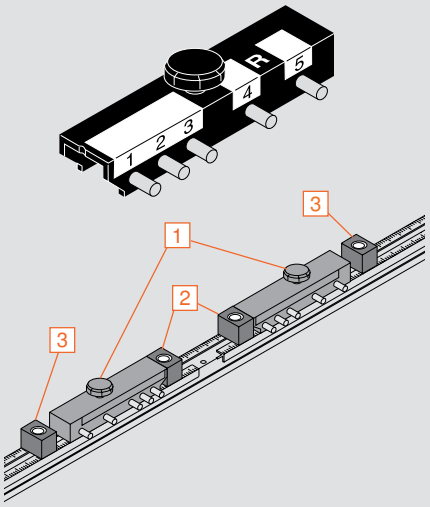

Enables fast setup for drawer front boring and front fixing bracket insertion with the MINIPRESS.

Eliminates the need for multiple fence stops.

Set includes:

1 LH & RH adj. stick mechanism
2 Upper drawer stop (qty 2)
3 Bottom drawer stop (qty 2)

NOTE: Essential tool for production boring of drawer fronts

	Part no.
MINISTICK	MZS.0040

Bumpers

- Cushions door closing
- Clear with a self-adhesive back

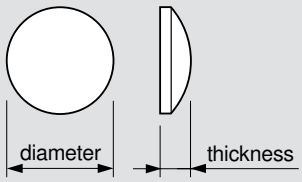

	Part no.
Ø**6** (1/4") x **1.5** (1/16")	FX4041
Ø**10** (3/8") x **3** (1/8")	SJ5312

© 2026 Blum, Inc. Subject to technical modifications without notice.

POZI DRIVER and bits

A POZI screwdriver (different from Phillips) is the most crucial tool you can use to assure that full torque is applied to all Blum mounting screws. POZI screws can be identified by the distinctive “tick” marks located in the center of the screw head recess.

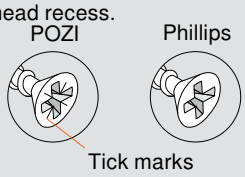

	Part no.
#2 POZI DRIVER	POZI DRIVER
1/4" Magnetic bit holder	BIT HOLDER
#2 x 1" POZI bit insert	POZI BIT #2X1
#2 x 2” POZI bit insert	POZI BIT #2X2

Replacement dowel and screw

Replacement dowel and screw for the front fixing brackets.

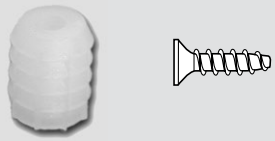

	Part no.
Ø10 mm dowel	80.3532
Dowel screw	608.1200

Deep thread system screw

Pilot bore **Ø5** (3/16") hole

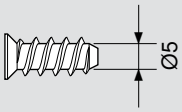

	Part no.
#7 x 11.5 mm, #2 POZI	661.1150.HG
#7 x 13 mm, #2 POZI	661.1300.HG
#7 x 14.5 mm, #2 POZI	661.1450.HG
#6 x 11.5 mm, Special	662.1150.HG

Deep thread wood screw

	Part no.
#6 x 5/8", #2 Phillips	606N
#6 x 5/8", #2 POZI	606P
#6 x 3/4”, #2 Phillips	6064N
#7 x 5/8", #2 Phillips	707N
#7 x 3/4", #2 Phillips	7074N

Truss head wood screw

Pilot bore **Ø2** (3/32") hole

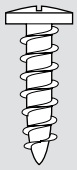

	Part no.
#6 x 1/2", #2 Phillips	612TH

Ø10 Drill bit

- **Ø10** (13/32") drill bit for the MINIPRESS boring heads

	Part no.
Drill bit (right hand)	M01.ZB10.02
Drill bit (left hand)	M01.ZB10.03

Ø5 Drill bit

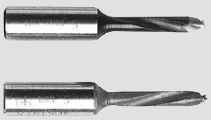

- **Ø5** (3/16") drill bit for the MINIPRESS boring heads

	Part no.
Drill bit (right hand)	M01.ZB05.D2
Drill bit (left hand)	M01.ZB05.D3

Countersink drill bit

- **Ø10** (13/32") drill bit for the MINIPRESS boring heads
- For HPL material

Ø10 mm drill bit (LH)	T108-10mmL

 © 2026 Blum, Inc.

POSI-STOP assembly

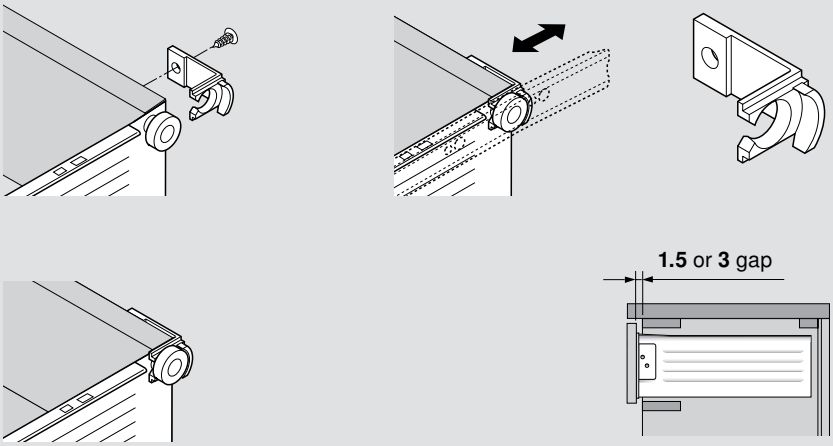

Add-on device to keep drawer front from contacting the cabinet face.

- Available in thicknesses of **1.5** (1/16") or **3** (1/8")
- Synthetic, natural finish
- Non-handed
- Use two per drawer
- Snap in place and secure with wood screw

	Part no.
1.5 (1/16") gap	**298.3210.01**
3 (1/8") gap	**298.3230.01**
Installation screws	**606N or 606P**

Drawer front support brackets

Standard drawers

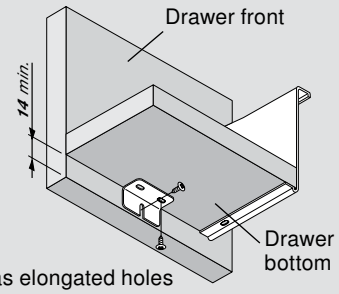

NOTE: Has elongated holes

Interior pull-out trays

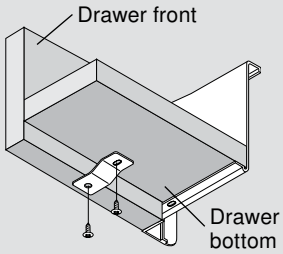

Add-on brackets for wide drawers to keep the front tight to the drawer bottom.

- Stainless steel
- Attach with 612TH screws #6 x 1/2" trusshead

	Part no.
For standard drawers	**ZSB.0090.01**
For interior roll-out trays	**ZSB.0045.01**
Installation screw	**612TH**

Cabinet profile spacers

With split dowel

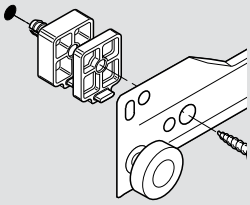

Without split dowel

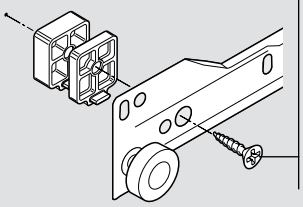

Use #6 FH screw that penetrates cabinet side at least **13**

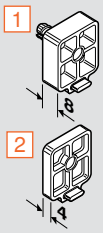

NOTE: Use spacers on front, middle and rear of each cabinet profile for adequate support

To space runners away from the cabinet side to clear door protrusion for interior roll-out trays.

- Two thicknesses available that can be stacked up to **24** (15/16")
- Synthetic, cream color

	Part no.
1 **8** (5/16") with **Ø5** (3/16") x **11** dowel for linebore mounting	**320M0188**
2 **4** (5/32") stackable	**320M0048**
Installation screw	**606N or 606P**

© 2026 Blum, Inc. Subject to technical modifications without notice.

Universal drawer bracket set

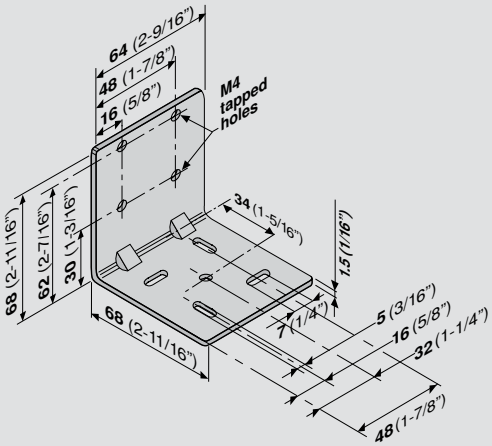

METABOX top mount (320N shown)

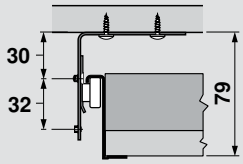

Bottom mount (320N only)

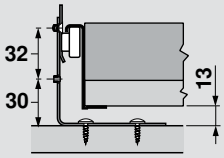

For mounting Blum runners to the underside of a counter surface (pencil drawer) or to the floor of a cabinet (roll-out tray).

- Zinc-coated steel
- Attach to cabinet with Blum 612TH screws, #6 x 1/2" truss head

Set includes:

- Universal brackets (qty 4)
- M4 x 6 flathead machine screws to attach runners to brackets (qty 8)

	Part no.
Drawer bracket set	295.4000
Installation screw	612TH

 © 2026 Blum, Inc.

Determining front fixing bracket locations

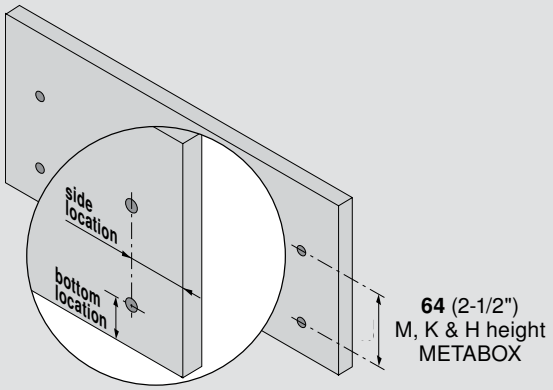

Side location

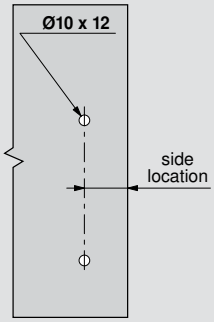

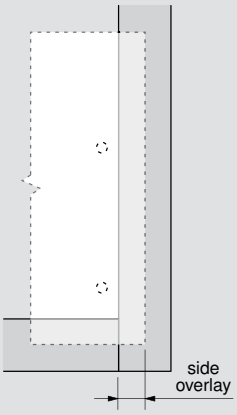

Side overlay	Side location
13	21.5
14	22.5
16	24.5
17.5	26
19	27.5

NOTE: For overlays not shown please refer to specification pages 6-19 to calculate hole locations

Bottom location

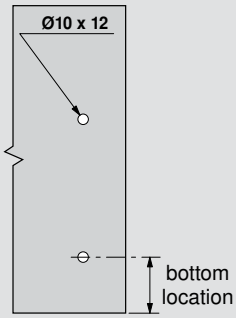

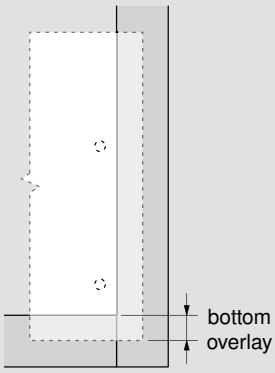

Bottom overlay	Bottom location		
	N and M	K	H
13	26.5	58.5	90.5
14	27.5	59.5	91.5
16	29.5	61.5	93.5
17.5	31	63	95
19	32.5	64.5	96.5

NOTE: For overlays not shown please refer to specification pages 6-19 to calculate hole locations

© 2026 Blum, Inc. Subject to technical modifications without notice.

 © 2026 Blum, Inc.

Notes

© 2026 Blum, Inc. Subject to technical modifications without notice.

Part no.	Page no.
602750	27
65.3300	29
65.100.01	28
65.1001.01	28
65.1051.02	29
80.3532	33
295.4000	33
298.3210.01	32
298.3230.01	32
320H3500C 15	14
320H4000C15	14
320H4500C15	14
320H5000C15	14
320H5500C15	14
320K3500C15	12
320K4000C15	12
320K4500C15	12
320K5000C15	12
320K5500C15	12
320M0048	32
320M0088	32
320M0188	32
320M2700C15	10
320M3500C15	10
320M4000C15	10
320M4500C15	10
320M5000C15	10
320M5500C15	10
320N3500C15	8
320N4000C15	8
320N4500C15	8
320N5000C15	8
320N5500C15	8
606N or 606P	33
6064N	33
608.1200	33
612TH	33
661.1150.HG	33
661.1300.HG	33
661.1450.HG	33
662.1150.HG	33
707N	33
7074N	33
BIT HOLDER	33
DB-2.5mm	28, 29
DB-5mm	29
DB-10mm	29
FX4041	32
M01.ZB05.D2	33
M01.ZB05.D3	33
M01.ZB10.02	33
M01.ZB10.03	33
M30.1329	31
M52.1056*US	30
M53.1004*US	30
M53.1053*US	30
MZD.2000	30
MZD.2V00	30
MZD.5000	30
MZV.2E00	30
MZK.190S	31
MZK.8800S	31
MZM.0092.01	34
MZR.2000	32
MZR.5300.US	30
MZS.0040	32
POZI BIT #2X1	33
POZI BIT #2X2	33
POZI DRIVER	33
SJ5312	32
T108-10mmL	35
Z70.0320	22
ZAA.3500	10, 12, 14,
ZIF.3000.02	20
ZIF.3000.03	20
ZIF.3010.02	19
ZIF.3010.03	19
ZIF.3050	21
ZME.1600.01	32
ZME.1610	32
ZML.0040	27
ZML.1500	27
ZML.1510	27
ZML.8000.02	27
ZRE.421S.ID	16
ZRE.471S.ID	16
ZRE.521S.ID	16
ZRG.1104U	16
ZRM.0004.10	24
ZRM.1100G	24
ZRM.1100S	24
ZRM.5500.US	24
ZSB.0045.01	27
ZSB.0090.01	27
ZSF.130E	10, 12, 14
ZSF.1200	10, 12, 14
ZSF.1300	10, 12, 14
ZSF.1510.04	8
ZSF.1510.05	8
ZSF.1610.04	8
ZSF.1610.05	8
ZSF.1700	10, 12, 14
ZSF.1800	10, 12, 14

 © 2026 Blum, Inc.

blum

Why Choose Blum

The Blum name stands for quality, innovation and great customer service. We manufacture hardware that makes working in the kitchen easier, no matter the age of the user, and we do this globally. We've been in the United States for more than 40 years, and we are committed to manufacturing for the American market. Blum supports the United States market with a network of distributors, knowledgeable Blum sales representatives and an experienced customer service department. Each of our products has been designed carefully, with the customer experience in mind. We have a deep commitment to research and believe anyone who manufactures, sells, installs or uses our products should benefit from our knowledge and experience. We specialize in engineering and manufacturing concealed hinges, drawer systems and systems for lift-up doors. From our touch-to-open technology, to the soft-closing door or drawer, our hardware helps modernize the kitchen experience.

To learn more about Blum, visit blum.com/tour

ISO 9001
Certified Quality System

Blum, Inc. is ISO 9001 certified which means that you are assured of consistent quality in every Blum product. They exceed the requirements of ANSI/BHMA standards for cycle life, static load and self-closing performance.

Please visit blum.com for information on other Blum products.
LIT.MBX1000.07.26 ©2026 Blum, Inc. Printed in USA

Blum, Inc.
7733 Old Plank Rd.
Stanley, NC 28164
800-438-6788
blum.com

ISO 9001
Certified Quality
System

blum®