AVENTOS HK top

Beautifully functional

www.blum.com

Small lift system packed with functionality

An eye for detail and the big picture – that's what you need if you want to develop a lift system that's not only compact in design but also impressive in functionality. And that's what you've got with AVENTOS HK top: the perfect solution for furniture where every detail counts.

blum

Content

4 Sleek design

6 Integrated functionality

8 Well-thought-out assembly

10 Optimised installation

12 Motion technologies

14 SERVO-DRIVE

16 AVENTOS HK top throughout the home

20 DYNAMIC SPACE

22 Lift system range

24 AVENTOS fittings at a glance

26 Ordering and planning information

38 About Blum

Sleek design

AVENTOS HK top blends discreetly into tall units and wall cabinets, putting the focus even more firmly on the design of furniture. AVENTOS HK top has already won several design awards for its small installation size and minimalist design.

Small installation size
The size of AVENTOS HK top makes it ideal for small cabinets. But this compact yet powerful fitting is even suitable for large wall cabinets.

Minimalist cover cap
Linear design, harmonious proportions, smooth finish – the cover cap impresses with its minimalist look. With unique customer branding if desired.

Choice of three colours
Light grey, silk white or dark grey. Select the right colour cover cap to blend stylishly with your furniture, or why not introduce accents?

reddot design award
winner 2018

DESIGN
AWARD
2019

GERMAN
DESIGN
AWARD
WINNER
2019

Detailed information on the awards can be found at www.blum.com/award

Integrated functionality

Every AVENTOS HK top component has been optimised in detail to pack top functionality into a small space. You can even feel the advanced technology at work: lift systems glide open with ease and close softly and effortlessly.

Variable stop
Adjust the lift mechanism precisely to the weight of the front and the stay lift remains exactly where you want it to, so it is always within easy reach.

Minimal opening forces
AVENTOS HK top boasts balanced opening forces regardless of the weight of the front. So even large and heavy fronts are easy to use.

Well-thought-out assembly

AVENTOS HK top has been designed to make assembly and installation precise and simple. You can choose between two different lift mechanisms – and consequently, two types of installation. Thanks to the new fixing position, drilling is the same for all applications and cabinet heights.

Further information about assembly.

www.blum.com/hktopassembly

Lift mechanism with positioning system

Simply position this type of lift mechanism so it touches the top panel and is flush with the cabinet face. No pre-drilling required.

Lift mechanism with pre-installed system screws
This type of lift mechanism is fixed to the cabinet side with two system screws and two pegs. It can even be installed before the cabinet is assembled. Simply drill four holes with a 32-mm spacing.

Optimised installation

Many useful features have been incorporated directly in AVENTOS HK top. As a result, the lift system can be mounted accurately, quickly and easily. The front gap layout and opening angle can be adjusted in no time. And the lift mechanism can be set from the front without having to remove the cover cap. This means that the lift system will stay open in any position desired.

Our EASY ASSEMBLY app provides all the information you need for quick and easy installation and adjustment.

www.blum.com/eaapp

Easy front attachment

The marking template makes it quick and easy to correctly position the front fixing brackets. Attach template, set front overlay, position front, mark position. That's it.

Integrated safety mechanism

The innovative safety mechanism stops the lever arm from opening unintentionally, making installation nice and safe.

Adjustment using TORX screws

AVENTOS HK top is based on TORX technology. This provides optimum support for precise and easy adjustment.

Infinitely variable opening angle

AVENTOS HK top comes with an integrated opening angle stop. The opening angle is infinitely variable and can be set exactly as required.

Find out more about Blum's 4 motion technologies at:

www.blum.com/4formore

SERVO-DRIVE
by Blum

Electrical opening and soft close

Lift systems open at a single touch with SERVO-DRIVE. And close automatically at the press of a switch with integrated soft close.

Make your wall cabinets easy to use

Enhance the functionality of AVENTOS HK top by combining the lift system with a motion technology. A motion support system makes it even easier for your customers to open and close tall units and wall cabinets – with or without handles.

Soft close

BLUMOTION ensures that fronts close softly and effortlessly – regardless of weight and how hard they are pushed shut.

Mechanical opening

Cabinets open at a single touch, giving you easy access to the opening edge of fronts. To close, simply press shut.

blum

SERVO-DRIVE for supreme user convenience

AVENTOS HK top can also be combined with the SERVO-DRIVE electrical motion support system. Fronts open at a single touch and close at the press of a switch. What is more, the lift system still impresses with its small installation size despite the addition of a drive. Functionality at its best!

Easy drive unit fixing
After installing the lift system, attach the drive unit to the lift mechanism. It is simply clipped on without tools.

Assisted start-up
Colour signals on the drive unit and wireless switch take you through start-up step by step and confirm that settings are correct.

All kinds of installation situations

Small in size, AVENTOS HK top fits snugly into every cabinet, e.g. above refrigerators.

Thin fronts of 8 mm or more

The new EXPANDO T fixing system makes it easy to combine AVENTOS HK top with thin fronts. The fixing system can be used for wall cabinets, doors and pull-outs.

Fronts with wide and narrow alu frames

You can implement a wide array of fronts with AVENTOS HK top. No matter whether wooden fronts or fronts with aluminium frames – the choice is yours,

Diverse applications in kitchens

AVENTOS HK top blends discreetly into cabinet interiors and wows in performance. Wide tall units and wall cabinets can be implemented with ease to meet exacting design standards and produce harmonious gap layouts throughout the kitchen.

blum

LOCAS N LOVE

Diverse applications throughout the home

The more bespoke your furniture, the greater the impact. AVENTOS HK top gives you many possibilities to put the focus on customised solutions.

Door thicknesses up to 30 mm

Thanks to AVENTOS HK top, you can even implement thick wooden fronts. And they will open with ultimate ease no matter how heavy they are.

Add punch to cabinet interiors

You have a choice of different colour cover caps, so you can either allow the small lift system to blend harmoniously with interiors or accentuate it and add punch to the colour scheme.

Freedom of movement
Fronts open up and out of the user's way. What is more, they hold in any position so they can even stay open during cooking. This means you have easy access to contents at all times.

Ample storage space
Tall units and wall cabinets equipped with lift systems come in all heights and widths. They can be tailored to storage needs or designed to produce harmonious gap layouts throughout the kitchen.

Top quality motion
Fronts open with a feather-light glide. Lift systems can be equipped with a mechanical or electrical opening support system as desired. Soft close is already integrated in BLUMOTION and SERVO-DRIVE.

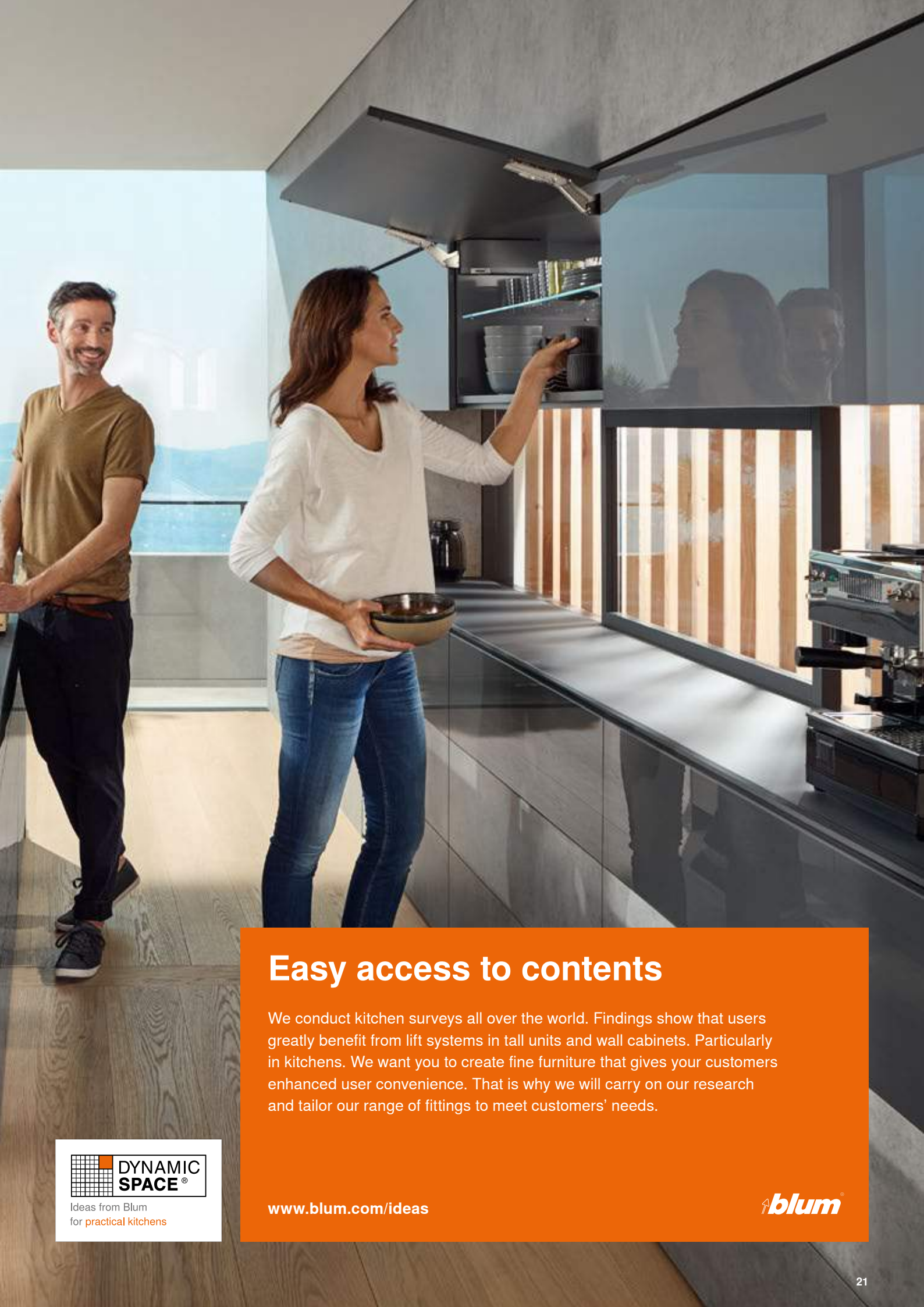

Easy access to contents

We conduct kitchen surveys all over the world. Findings show that users greatly benefit from lift systems in tall units and wall cabinets. Particularly in kitchens. We want you to create fine furniture that gives your customers enhanced user convenience. That is why we will carry on our research and tailor our range of fittings to meet customers' needs.

DYNAMIC SPACE®
Ideas from Blum
for practical kitchens

www.blum.com/ideas

blum

AVENTOS HK top
for stay lifts

Bringing diversity to wall cabinets

They fold, lift and swing up and over – AVENTOS lift systems bring a wide range of motion solutions to tall units and wall cabinets. We have the right lift system to suit every customer's needs and every installation situation. Find out more about the advantages of our various fittings solutions at www.blum.com/aventos

blum

AVENTOS HF for bi-fold lift systems

AVENTOS HS for up & over lift systems

AVENTOS HL for lift ups

AVENTOS HK for stay lifts

AVENTOS HK-S for small stay lifts

AVENTOS HK-XS for small stay lifts

AVENTOS range

The right lift system for any application

	Motion	Typical applications	Indication of front weight*	Possible fronts	Possible cabinet dimensions in mm
HF		Wall cabinet, top, two-part fronts		Wooden, wide/narrow alu frame fronts, wood-glass combinations, asymmetrical fronts	Height 480–1040 Width up to 1800
HS		Wall cabinet (if space), large, one-part fronts, with cornices and crown moulding		Thin fronts, wooden, wide/narrow alu frame fronts	Height 350–800 Width up to 1800
HL		Wall cabinet, tall cabinet (if space) within reaching height, devices behind, fronts above		Thin fronts, wooden, wide/narrow alu frame fronts	Height 300–580 Width up to 1800
HK top		Wall cabinet, tall cabinet, above fridge, larder unit, oven		Thin fronts, wooden, wide/narrow alu frame fronts	Height 205–600 Width up to 1800
HK		Wall cabinet, tall cabinet, above fridge, larder unit, oven		Thin fronts, wooden, wide/narrow alu frame fronts	Height 205–600 Width up to 1800
HK-S		Wall cabinet, tall cabinet, above fridge, larder unit, oven		Wooden, wide/narrow alu frame fronts	Height 180–600 Width up to 1800
HK-XS		Wall cabinet, tall cabinet, above fridge, larder unit, oven, extractor, bath	Two-sided	Wooden, wide/narrow alu frame fronts	Height 240–600 Width up to 1800

*You use the front weight and cabinet height to calculate the power factor of the lift mechanism. We would be happy to assist you with your product selection at www.blum.com/configurator

	Minimum depth	Complete fitting or with hinges	Special installation or assembly	Available motion technology	Cover cap
	278	Hinges on cabinet top panel required + connection of fronts	CLIP assembly Cabinet top panel assembly 3 lift mechanism types (symmetrical) 4 telescopic arms (symmetrical)	BLUMOTION by Blum SERVO-DRIVE by Blum	Silk white Light grey Dark grey
	276	No hinges required	CLIP assembly Cross stabiliser 9 lift mechanism types (symmetrical) 1 lever arm	BLUMOTION by Blum SERVO-DRIVE by Blum	Silk white Light grey Dark grey
	278	No hinges required	CLIP assembly Cross stabiliser 5 lift mechanism types (symmetrical) 4 lever arms	BLUMOTION by Blum SERVO-DRIVE by Blum	Silk white Light grey Dark grey
	187	No hinges required	CLIP assembly, 4 lift mechanism types (symmetrical), lift mechanism adjustment from the front, integrated safety solution and opening angle stop	BLUMOTION by Blum SERVO-DRIVE by Blum TIP-ON by Blum	Silk white Light grey Dark grey
	207	No hinges required	CLIP assembly 4 lift mechanism types (symmetrical)	BLUMOTION by Blum SERVO-DRIVE by Blum TIP-ON by Blum	Silk white Light grey Dark grey
	163	No hinges required	CLIP assembly 3 lift mechanism types (symmetrical)	BLUMOTION by Blum TIP-ON by Blum	Silk white Light grey Dark grey
	125 (Special solution with 100 mm possible)	Hinges on cabinet top panel required	CLIP assembly Cabinet top panel assembly 3 lift mechanism types (symmetrical)	BLUMOTION by Blum TIP-ON by Blum	

Standard and SERVO-DRIVE for AVENTOS HK top

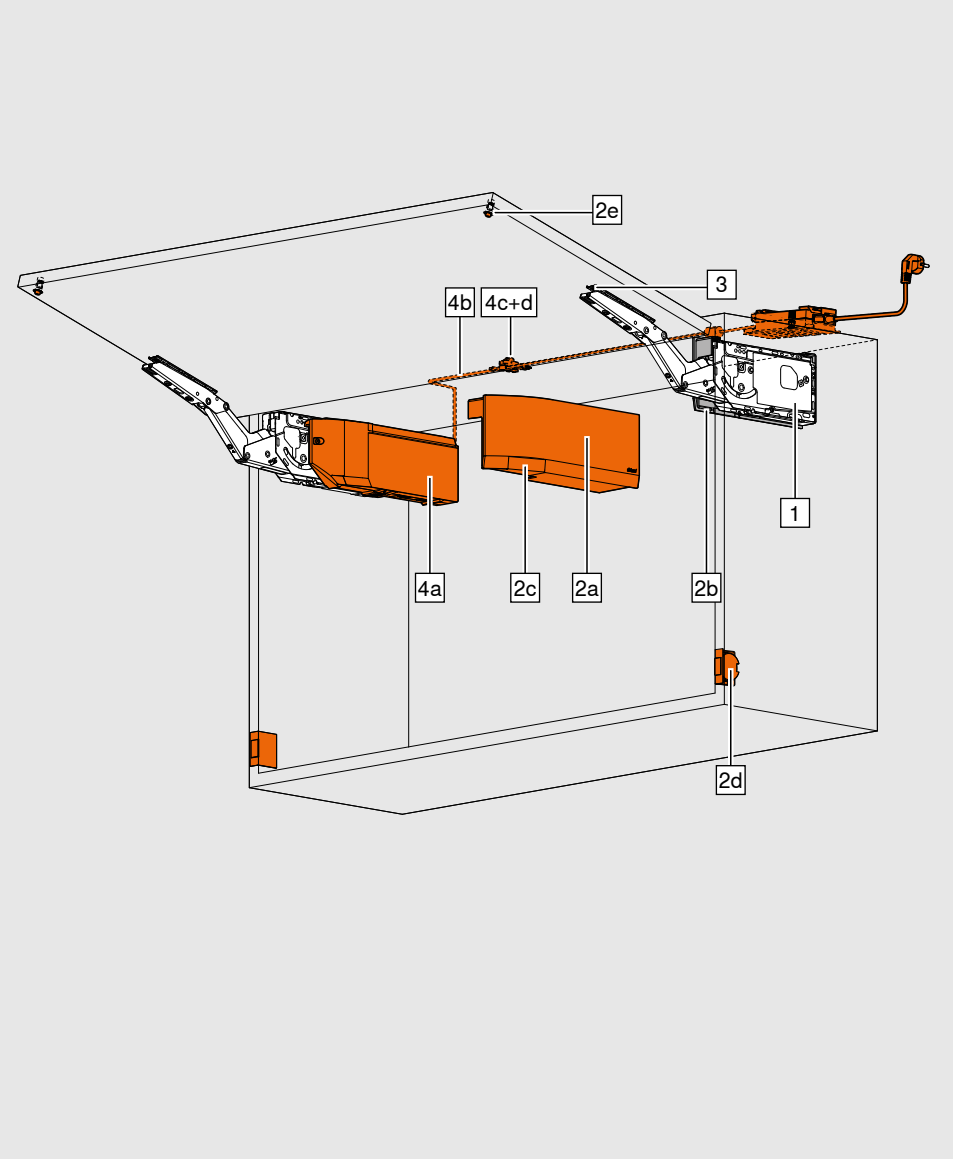

Using the power factor, you can calculate the number of required lift mechanisms. The power factor required depends on the weight of the front (incl. double the handle weight) and cabinet height.

When using a third lift mechanism (a power factor increase of up to 50%), we recommend a trial application.

Note
We recommend an additional lift mechanism attached to the centre panel for wide cabinets. The reason for this is to prevent the middle of the front from sagging when open.

☐ Standard
■ SERVO-DRIVE

Power factor (LF) = cabinet height (KH) (mm) x front weight incl. double handle weight (kg)

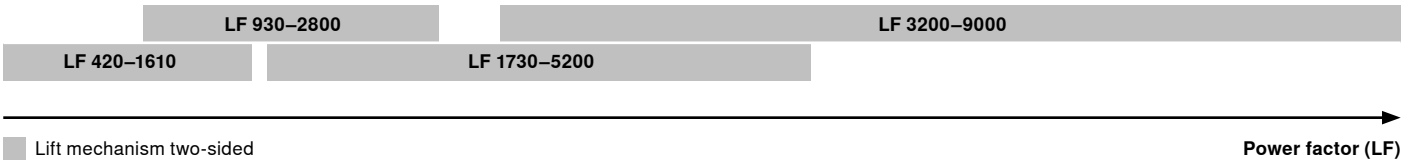

A trial application is recommended at the edge areas of the individual lift mechanisms.

Order specification

1 Lift mechanism set

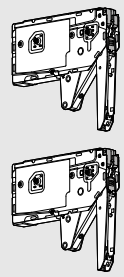

Symmetrical with pre-mounted system screws

LF	OW	
420–1610	max. 107°	22K2310
930–2800	max. 107°	22K2510
1730–5200	max. 107°	22K2710
3200–9000	max. 107°	22K2910

Max. front weight 18 kg for two lift mechanisms

Alternative

1 Lift mechanism set

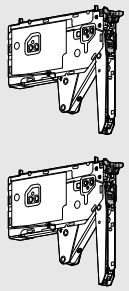

Symmetrical with chipboard screws incl. positioning template

LF	OW	
420–1610	max. 107°	22K2300
930–2800	max. 107°	22K2500
1730–5200	max. 107°	22K2700
3200–9000	max. 107°	22K2900

Max. front weight 18 kg for two lift mechanisms

2 Cover cap set

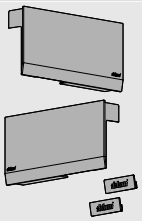

Material	Colour	
Plastic	HGR | SW | TGR	22K8000

Consisting of:
1 x large cover cap, left
1 x large cover cap, right
2 x small cover cap, stamped with Blum logo

2 Cover cap set for SERVO-DRIVE

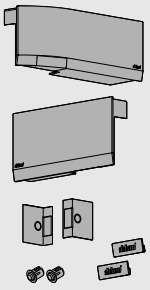

Material	Colour	
Plastic	HGR | SW | TGR	23K8000

Consisting of:
2a | 1 x SERVO-DRIVE large cover cap, left
2b | 1 x large cover cap, right
2c | 2 x small cover cap, stamped with Blum logo
2d | 2 x SERVO DRIVE switches
2e | 2 x Blum distance bumpers, Ø 5 mm

3 Front fixing bracket set

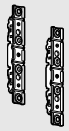

Symmetrical, nickel plated

Wooden fronts and wide alu frames*	20S4200
Narrow alu frames	20S4200A

* Use 4 chipboard screws (609.1x00) per side for wooden fronts. Use 4 countersunk self-tapping screws (660.0950) per side for wide alu frames.

Alternative

Front fixing bracket

Symmetrical, nickel plated

EXPANDO T	2 x	20S42T1

EXPANDO T for thin fronts

4 SERVO-DRIVE set

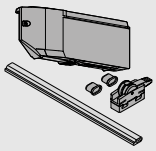

Material	Colour	
Plastic	Dust grey	23KA000

Consisting of:
4a | 1 x drive unit
4b | 1 x distribution cable, 1500 mm
4c | 1 x connecting node
4d | 2 x cable end protectors

We recommend using two synchronised drive units for three lift mechanisms or more

Blum transformer and accessories

See page 36

Accessories

Universal individual template

65.1051.02

Marking template for AVENTOS HK top

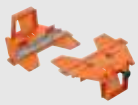

ZML.2200

LF Power factor
OW Opening angle (infinitely adjustable)
HGR | SW | TGR Light grey, silk white, dark grey

TIP-ON for AVENTOS HK top

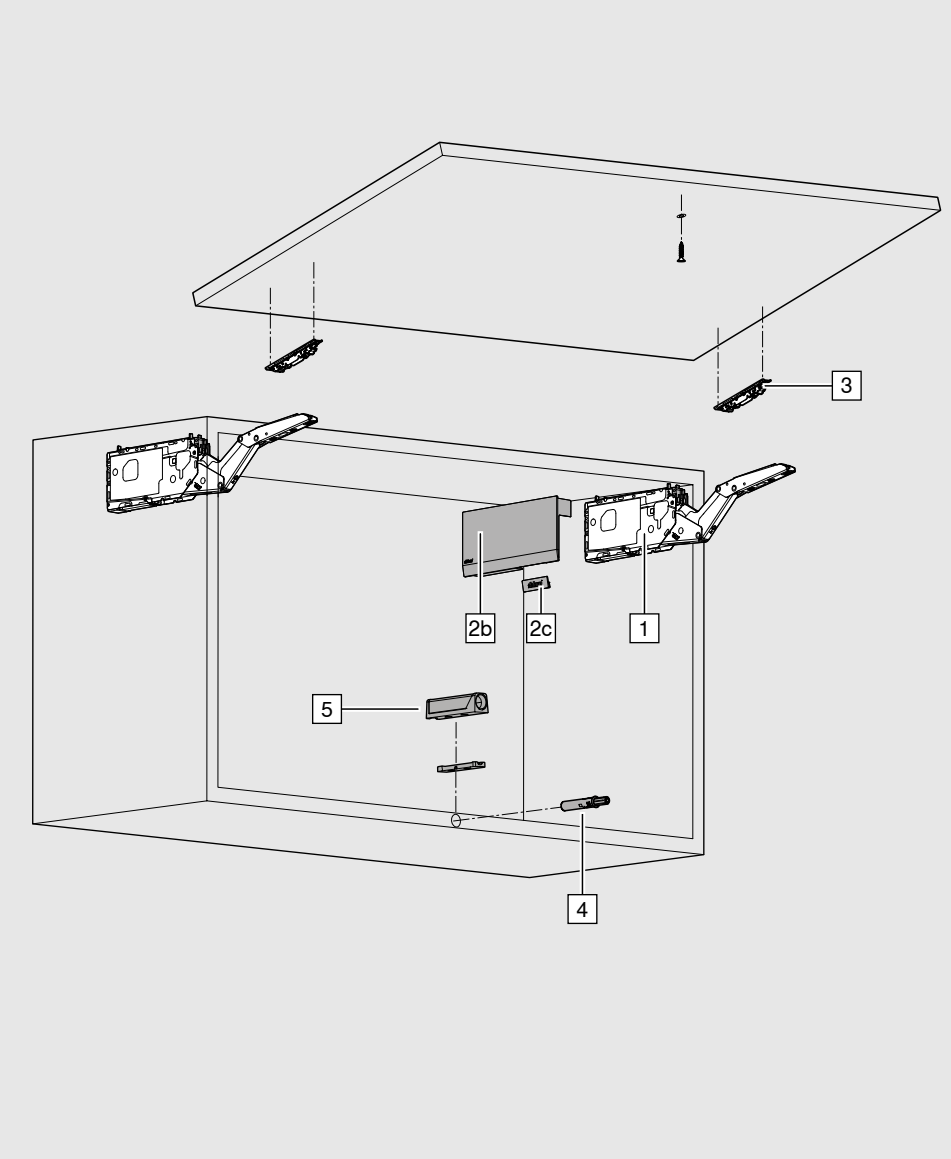

Using the power factor, you can calculate the number of required lift mechanisms. The power factor required depends on the weight of the front (incl. double the handle weight) and cabinet height.

When using a third lift mechanism (a power factor increase of up to 50%), we recommend a trial application.

Note
We recommend an additional lift mechanism attached to the centre panel for wide cabinets. The reason for this is to prevent the middle of the front from sagging when open.

Power factor (LF) = cabinet height (KH) (mm) x front weight incl. double handle weight (kg)

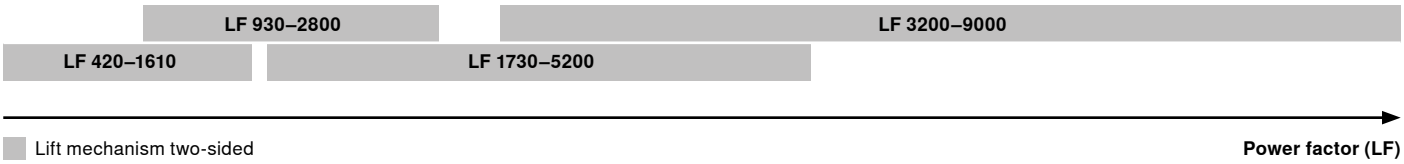

A trial application is recommended at the edge areas of the individual lift mechanisms.

Order specification

1	Lift mechanism set	
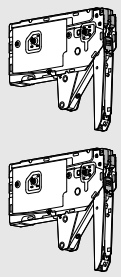	Symmetrical with pre-mounted system screws	
LF	**OW**	
420–1610	107°	22K2310T
930–2800	107°	22K2510T
1730–5200	100°	22K2710T
3200–9000	100°	22K2910T
	Max. front weight 18 kg for two lift mechanisms	

Alternative

1	Lift mechanism set	
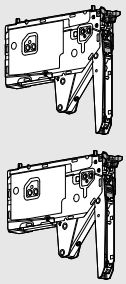	Symmetrical with chipboard screws incl. positioning template	
LF	**OW**	
420–1610	107°	22K2300T
930–2800	107°	22K2500T
1730–5200	100°	22K2700T
3200–9000	100°	22K2900T
	Max. front weight 18 kg for two lift mechanisms	

2	Cover cap set	
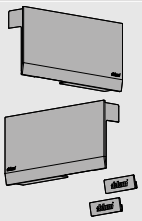	**Material**	**Colour**
	Plastic	HGR | SW | TGR 22K8000
	Consisting of: 2a | 1 x large cover cap, left 2b | 1 x large cover cap, right 2c | 2 x small cover cap, stamped with Blum logo	

3	Front fixing bracket set	
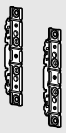	Symmetrical, nickel plated	
	Wooden fronts and wide alu frames*	20S4200
	Narrow alu frames	20S4200A
	* Use 4 chipboard screws (609.1x00) per side for wooden fronts. Use 4 countersunk self-tapping screws (660.0950) per side for wide alu frames.	

Alternative

	Front fixing bracket	
	Symmetrical, nickel plated	
	EXPANDO T 2 x	20S42T1
	EXPANDO T for thin fronts	

4	TIP-ON set	
	Material	**Colour**
	Plastic	SW | TS | R7036
	Short version: up to KH 500 mm	956.1004
	Long version: from KH 501 mm	956A1004
	Consisting of: 1 x TIP-ON 1 x screw-on catch plate 1 x chipboard screw 609.1500 1 x glue-on catch plate	

5	Straight adapter plate	
	Colour	
	Silk white (SW), terra black (TS), RAL 7036 platinum grey (R7036), nickel finish (NI-L)	
	Short version	956.1201
	Long version	956A1201

Alternative

	Cruciform adapter plates	
	Colour	
	RAL 7036 platinum grey (R7036)	
	Long version	956A1501

Accessories

	Universal individual template	
		65.1051.02

	Marking template for AVENTOS HK top	
		ZML.2200

LF Power factor
KH Cabinet height
OW Opening angle (infinitely adjustable)

HGR | SW | TGR Light grey, silk white, dark grey

Planning

Fixing positions for lift mechanism with pre-mounted system screws

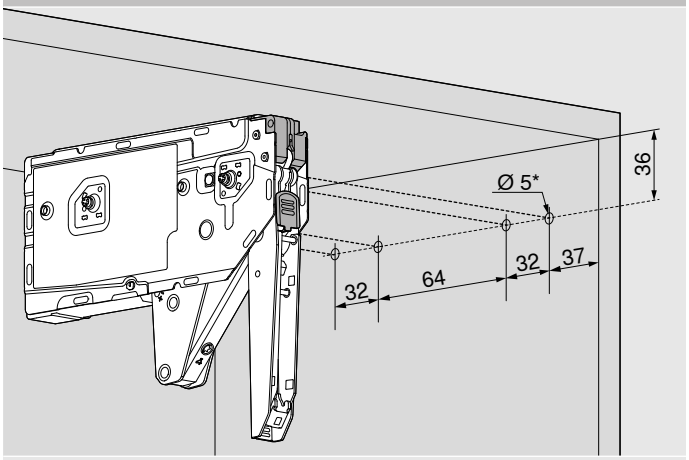

* Drilling depth 11.5 mm

Fixing positions for lift mechanism with chipboard screws incl. positioning template

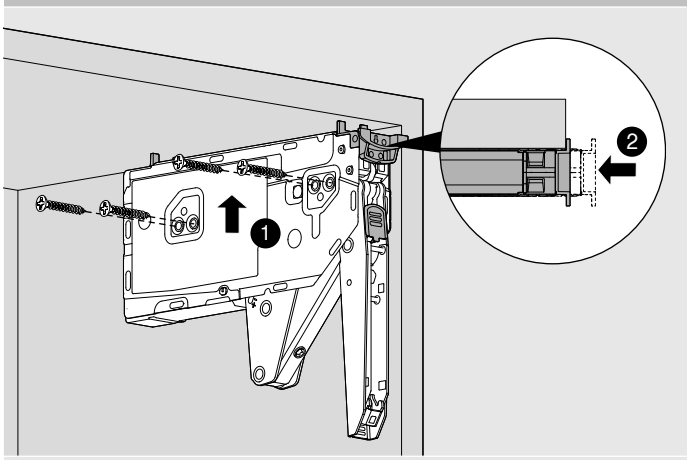

4 x Ø 4 x 35 mm

Space requirements in the cabinet

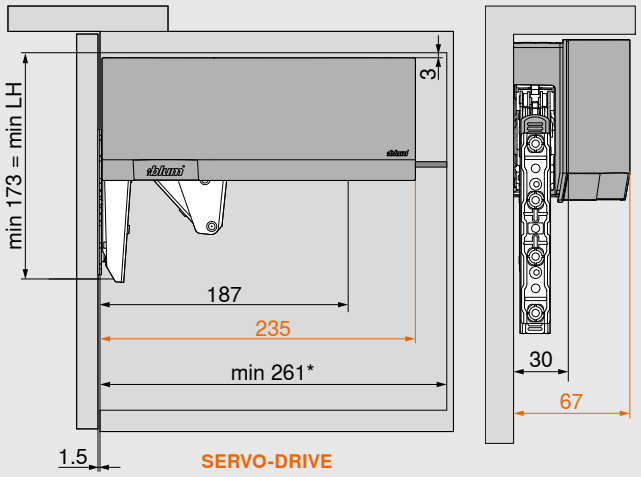

Note: Cabinet height max. 600 mm

* min. 261 mm with visible wall hanging bracket

Front assembly

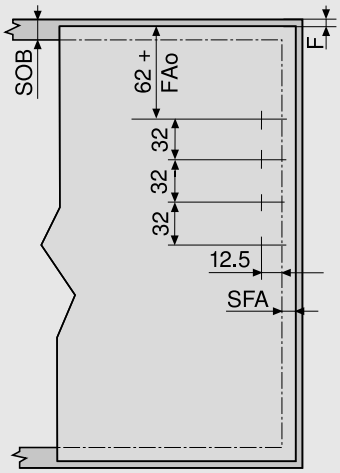

Wooden fronts and wide alu frames*

The upper front overlay (FAo) is no more than 25.4 mm

Wall application: Requires 5 mm minimum gap

* Use 4 chipboard screws (609.1x00) for wooden fronts. Use 4 countersunk self-tapping screws (660.0950) for wide alu frames.

Standard
TIP-ON
SERVO-DRIVE

F Gap
FAo Upper front overlay
LH Internal cabinet height
SFA Front overlay of the side panel
SOB Top panel thickness

Planning

Front assembly

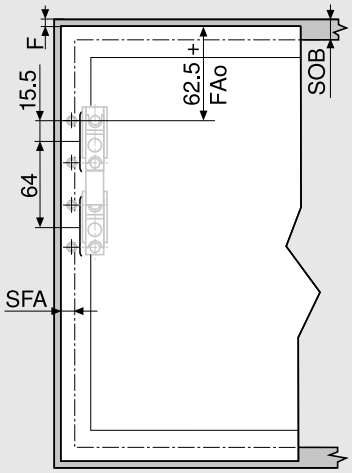

Narrow alu frames

The upper front overlay (FAo) is no more than 25.4 mm

Wall application: Requires 5 mm minimum gap

Planning for narrow alu frames

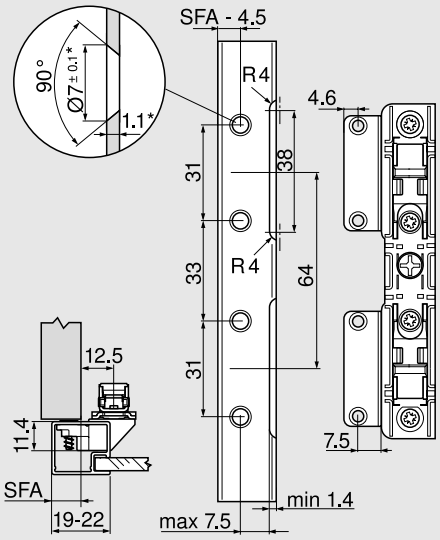

For frame width 19 mm: SFA of 11–18 mm possible

* When changing material thickness, adjust the assembly dimensions accordingly

Cornice and crown moulding space requirement

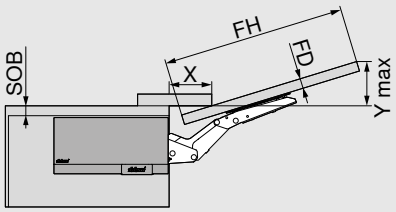

FD (mm)	16	19	22	26	28
X (mm)	68	57	47	33	27

Maximum top panel thickness 25.4 mm

Y = FH x 0.29 + FD - SOB

Minimum gap

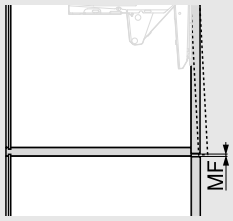

The MF is 2 mm

FD Front thickness
FH Front height
MF Minimum gap for opening
SFA Front overlay of the side panel
SOB Top panel thickness

Planning

Blum distance bumper drilling position

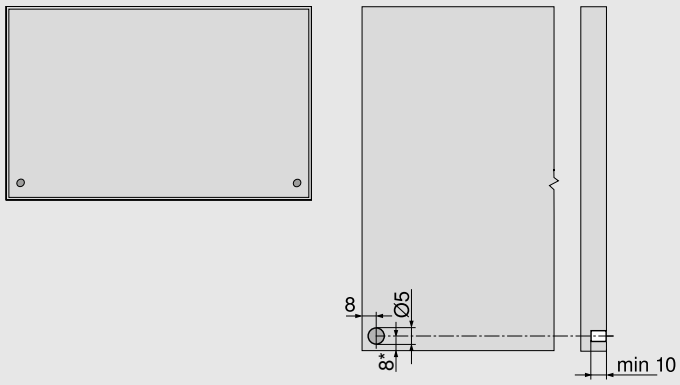

Recommendation for aluminium frames: Provide drill hole for the Blum distance bumper in the cabinet side. A trial application must be carried out when fixing the Blum distance bumper to the front.

Do not glue Blum distance bumper.

SERVO-DRIVE switch

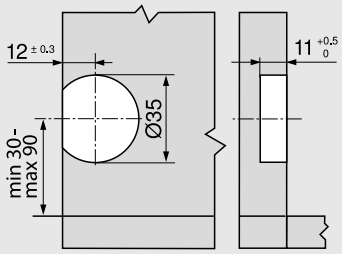

Planning

Cabinet assembly

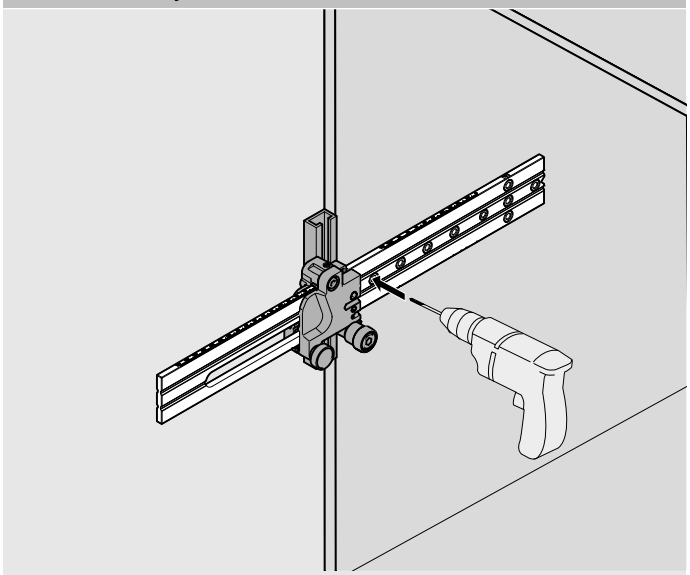

Drilling template	65.1051.02

can be used for all lift systems

Front assembly template

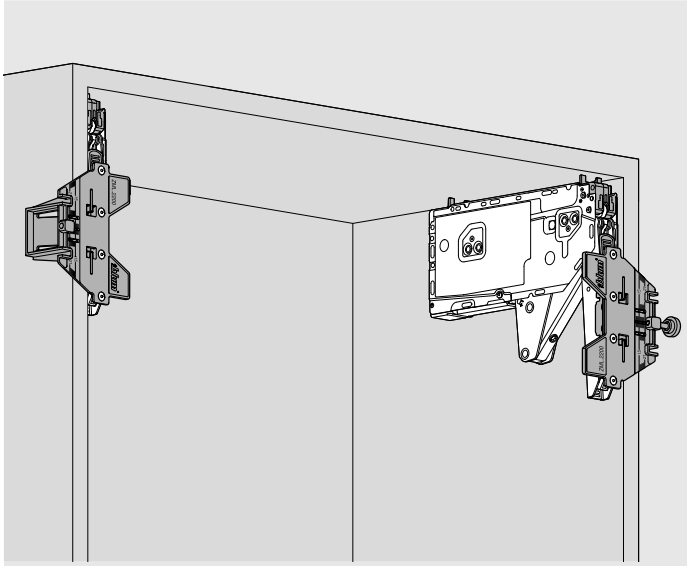

Marking template for AVENTOS HK top	ZML.2200

for front fixing

TIP-ON for drilling fixing position

TIP-ON short version

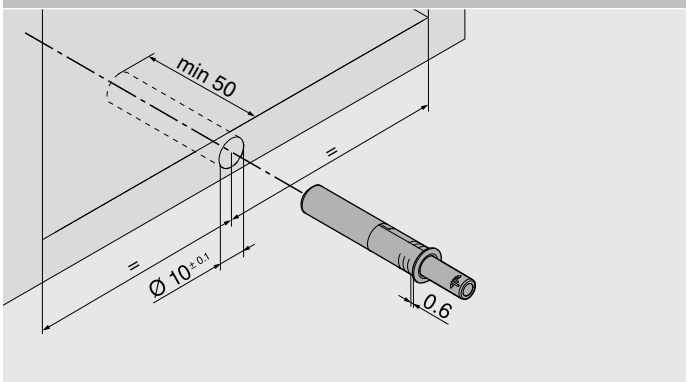

For fronts up to a height of 500 mm

TIP-ON long version

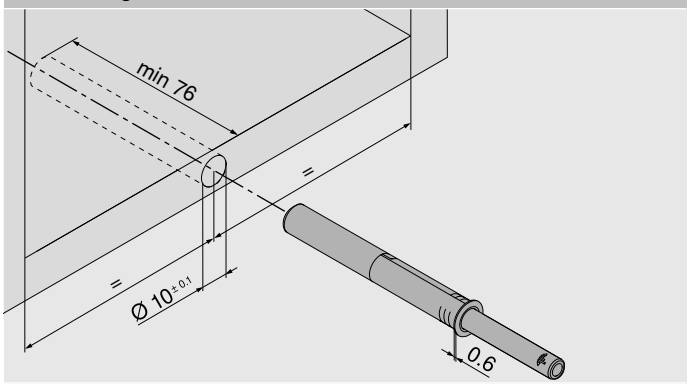

For front heights over 500 mm

TIP-ON adapter plate fixing position

Straight adapter plate – short version

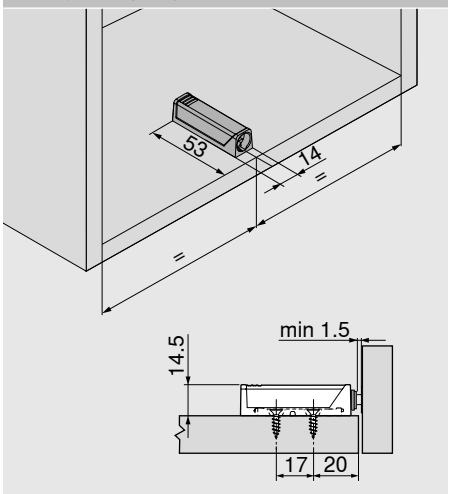

Straight adapter plate – long version

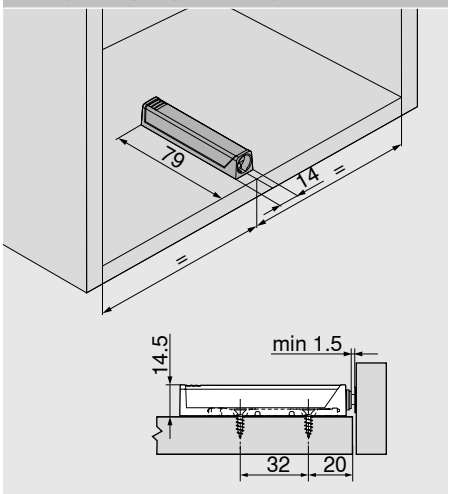

Cruciform adapter plates

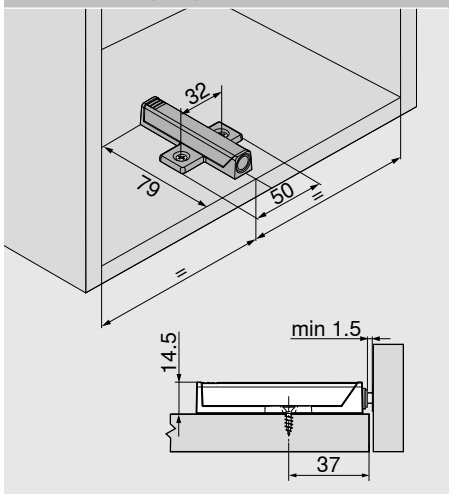

Installation dimensions for front gap

TIP-ON short version

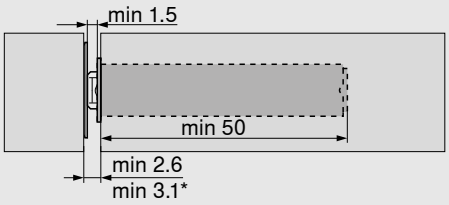

min. 2.6 mm with glue-on catch plate

* min. 3.1 mm with screw-on catch plate

TIP-ON long version

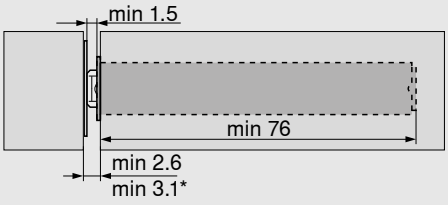

min. 2.6 mm with glue-on catch plate

* min. 3.1 mm with screw-on catch plate

Screw-on catch plate planning

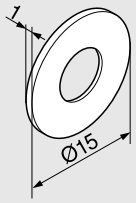

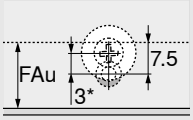

For drilling

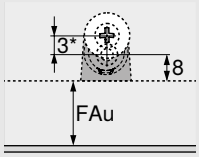

Straight adapter plate

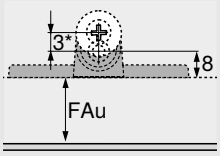

Cruciform adapter plates

* We recommend off-setting the positioning of TIP-ON by 3 mm for the screw-on catch plate.

Glue-on catch plate planning

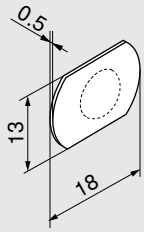

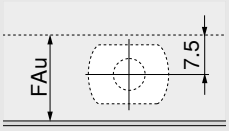

For drilling

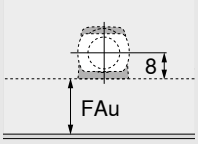

Straight adapter plate

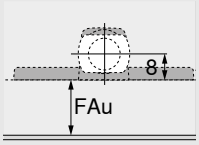

Cruciform adapter plates

FA Front overlay
FAu Bottom front overlay

SERVO-DRIVE for AVENTOS HK top
Blum transformer and accessories

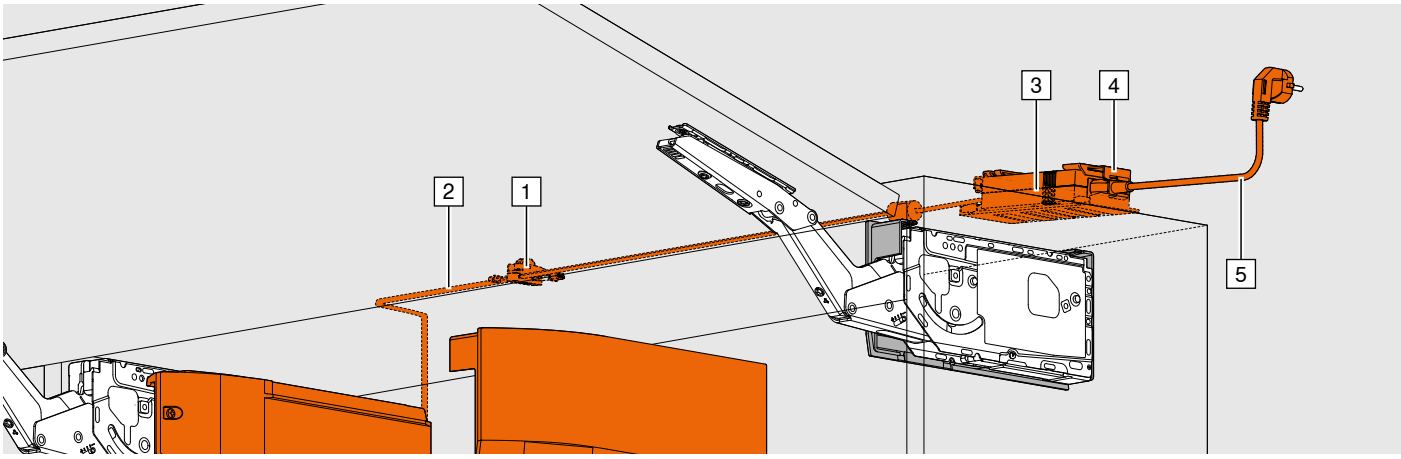

Order specification

1	Connecting node and cable end protector
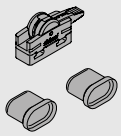	**Consisting of:** 1 x connecting node 2 x cable end protectors
	Z10V100E.01

2	Distribution cable and cable end protector	
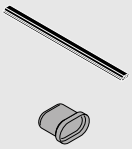	**Consisting of:** 1 x SERVO-DRIVE black electrical cable for cutting to size 5 x cable end protectors	
	8 m	**Z10K800AE**
	Can be used as a distribution cable and bracket profile cable	

3	24-Watt Blum transformer	
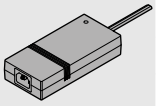	Language descriptions as per ISO-639	
	DE, EN, FR, IT, NL	**Z10NE030A**
	DA, EN, FI, NO, SV	**Z10NE030B**
	EL, EN, HR, SL, SR, TR	**Z10NE030C**
	EN, ES, FR, IT, PT	**Z10NE030D**
	CS, HU, SK, PL	**Z10NE030E**
	BG, ET, LT, LV, RO, RU	**Z10NE030F**
	EN, ES, FR, (US, CA)	**Z10NE030G**
	EN, ZH	**Z10NE030H**
	Without flex	
	Including instruction leaflet and installation instructions	
	Only 1 Blum transformer permitted per distribution cable!	

4	Transformer unit housing
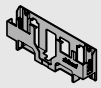	For panel fixing
	Z10NG120

5	Flex			
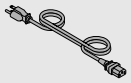	**Market**		**Market**	
	AR	**Z10M200A**	AU	**Z10M200K**
	UK	**Z10M200B**	CL	**Z10M200L**
	CH	**Z10M200C**	CN	**Z10M200N**
	DK	**Z10M200D**	TW	**Z10M200T**
	Europe	**Z10M200E**	US, CA	**Z10M200U**
	IN	☎ **Z10M200H**	ZA	**Z10M200Z**
	IL	**Z10M200I**	BR	☎ **Z10M200S.01**
	JP	**Z10M200J**	Europe[1]	**Z10M200E.OS**
	[1]Without plug			

Alternative to 24-Watt Blum transformer and flex

	12-Watt Blum plug-in transformer			
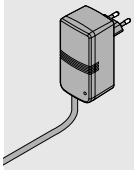	Including flex (1120 mm)			
	For single applications only			
	Network adapter (x)*			
	E 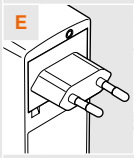	B 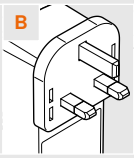	K 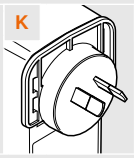	U 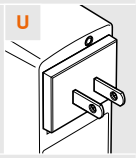
	Language packages (y)			
	A	DE, EN, FR, IT, NL	E	CS, HU, SK, PL
	B	DA, EN, FI, NO, SV	F	BG, ET, LT, LV, RO, RU
	C	EL, EN, HR, SL, SR, TR	G	EN, ES, FR, (US, CA)
	D	EN, ES, FR, IT, PT	H	EN, ZH
	Z10NA30xyF			

* Not permitted for more than one drive unit!

	Cable holder
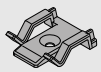	Using the cable holder, the distribution cable can easily be fixed to the cabinet, for example.
	Z10K0009

Planning

Space requirement and safety distance, Blum transformer unit housing and Blum plug-in transformer

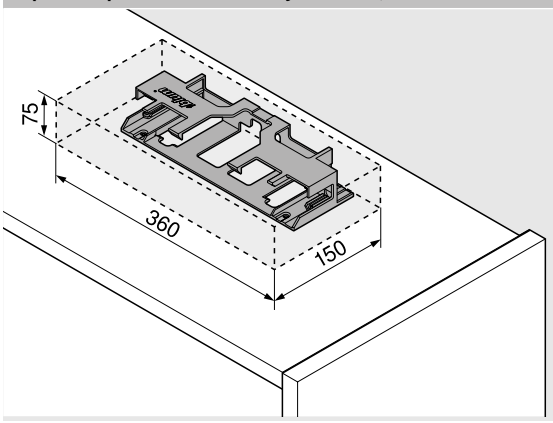

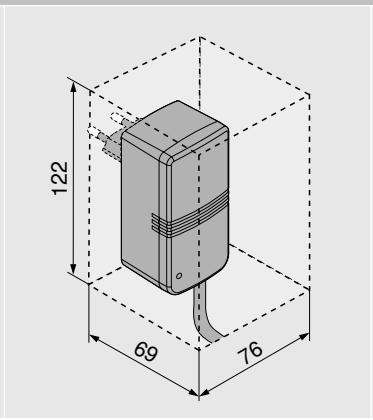

A safety distance of 30 mm must be maintained for air circulation (see graphic); otherwise, there is a risk that the Blum transformer or plug-in transformer could overheat.

Assembly on the cabinet top panel

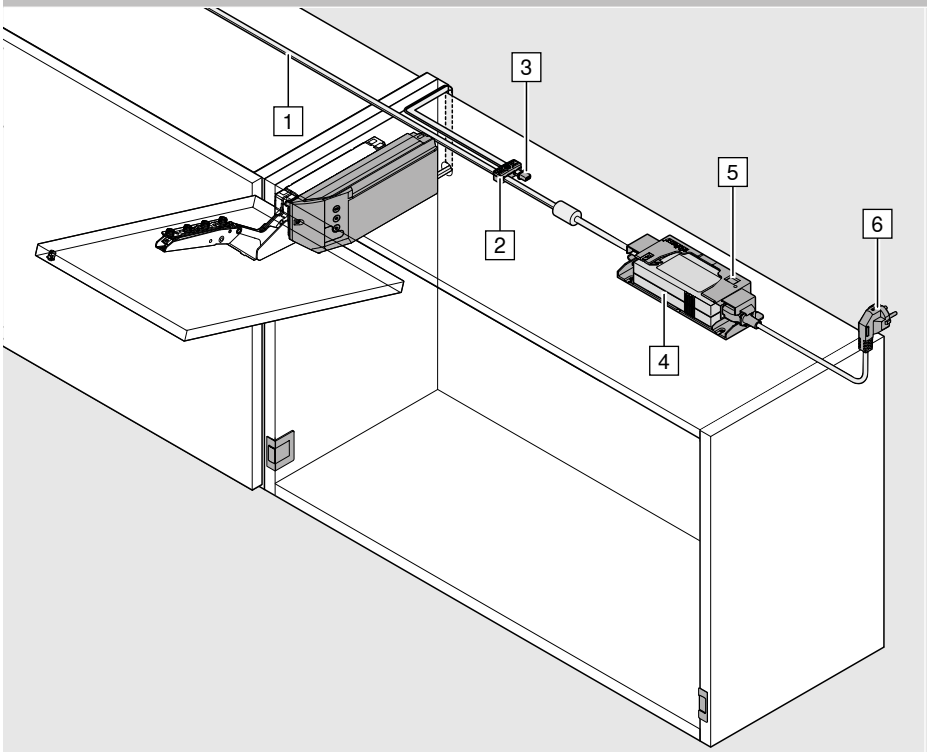

1. Distribution cable for cutting to size
2. Connecting node
3. Cable end protector
4. Blum transformer
5. Transformer unit housing
6. Flex

Only one Blum transformer can be connected to each distribution cable.

Back cabling

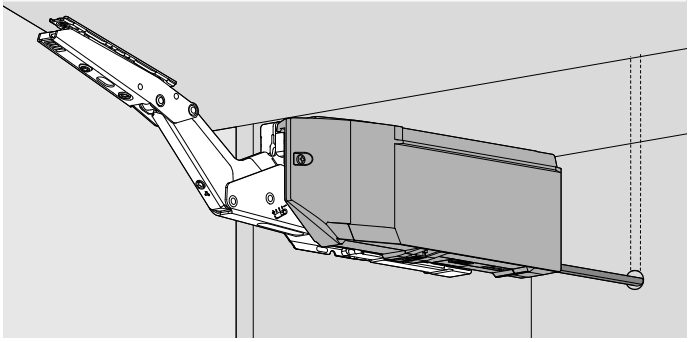

Top cabling

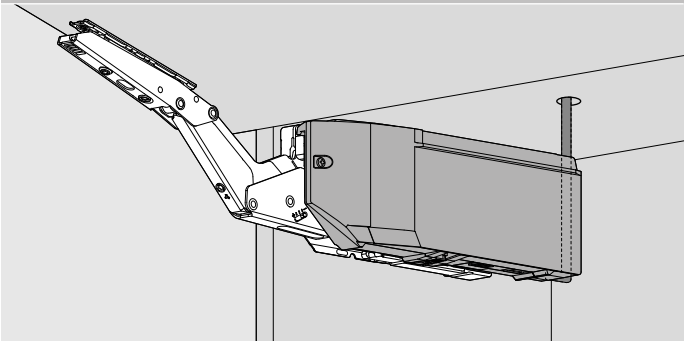

The company Blum

Founded over 60 years ago by Julius Blum, Blum is a family-owned company that operates on an international scale. Its strategic business segments include lift, hinge and pull-out systems. All our product developments focus on perfecting motion.

www.blum.com

Blum in Austria and around the world

The company has eight plants in Vorarlberg, Austria, additional production sites in Poland, the USA and Brazil and 31 subsidiaries/representative offices. Blum supplies more than 120 markets. The Blum Group employs 8.000 people in total, 6.000 of whom work in Vorarlberg.

Global customer benefits

“Whether manufacturer, distributor, fitter or kitchen user – everybody should personally enjoy the benefits of Blum products” – that is Blum’s philosophy on global customer benefits.

Innovations

To support customers with innovative fittings solutions and secure long-term success for the company, we need to consistently invest in research and development, in plants and facilities and in employee training. With more than 2.100 granted patents worldwide, Blum is one of Austria’s most innovative companies.

Quality

Blum’s comprehensive concept of quality does not only apply to products. Services and collaboration with customers and partners should also meet the same quality requirements.

ISO 9001
Certified Quality System

Environment

At Blum, we believe that responsible ecological behaviour has long-term economic benefits. The longevity of products is just one of many important aspects. Other important measures include the use of environmentally-friendly processes, the intelligent use of materials and prudent energy management.

ISO 14001
Certified Environmental System

ISO 50001
Certified Energy System

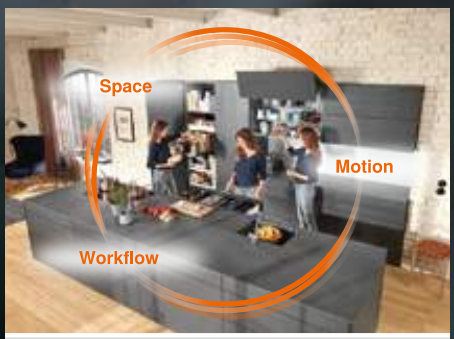

DYNAMIC SPACE

Good workflows, optimum use of storage space and top quality motion are important features of a practical kitchen. Blum’s ideas for practical kitchens are designed to bring function, convenience and ergonomics to furniture interiors.

All data relates to our current scope of knowledge as at 30.06.2019

All content is copyrighted by Blum.
Subject to technical modifications and changes to the range without notice.
Printed in Austria · IDNR: 000.000.0 · EP-432/2 EN-MY/09.19-1 **LIGHTHOUSE.de**

Blum Malaysia
A-5-10 Empire Tower
SS16/1 Subang Jaya
47500 Selangor
Malaysia
Tel.: +603 5021 8325
Fax.: +603 5021 8326
E-Mail: info.my@blum.com
www.blum.com

Julius Blum GmbH
Furniture Fittings Mfg.
6973 Höchst, Austria
Tel.: +43 5578 705-0
Fax: +43 5578 705-44
E-mail: info@blum.com
www.blum.com

ISO 9001 Certified Quality System
ISO 14001 Certified Environmental System
ISO 50001 Certified Energy System

blum®