

Our runner systems give you quality steel for your wooden design ideas. We have a solution for every requirement: the sophisticated **MOVENTO** and the versatile **TANDEM** runner system. They can be combined with various motion technologies for enhanced convenience.

- **BLUMOTION** – for soft and effortless closing
- **SERVO-DRIVE** – electric opening support, combined with **BLUMOTION**
- **TIP-ON BLUMOTION** – mechanical opening support, combined with **BLUMOTION**
- **TIP-ON** – mechanical opening support; to close, press shut
- Comprehensive programme for many options
- High stability and excellent sag values
- Quality for the lifetime of the furniture

MOVENTO



The sophisticated runner system
MOVENTO offers synchronised smooth running action, 4-dimensional front adjustment, and a dynamic carrying capacity of 40 and 70 kg with high stability and excellent sag values.

TANDEM



The versatile runner system
TANDEM high ease-of-use in the entire living area. The comprehensive **TANDEM** programme has the right solution for any piece of furniture.

MOVENTO


Symbolic image

MOVENTO	410
Overview	411
Accessories	420
Attachment of runners	428

TANDEM


Symbolic image

TANDEM	430
Overview	431
Accessories	452
Attachment of runners	460

SERVO-DRIVE for MOVENTO | TANDEM


Symbolic image

SERVO-DRIVE for **MOVENTO** | **TANDEM**	462
Overview	463
Accessories	500

TIP-ON BLUMOTION for MOVENTO

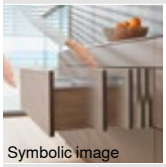
Symbolic image

TIP-ON BLUMOTION for **MOVENTO**	502
Overview	503
Accessories	420
Attachment of runners	428

TIP-ON for MOVENTO | TANDEM


Symbolic image

TIP-ON for **MOVENTO** | **TANDEM**	506
Overview	507
Accessories	420
Attachment of runners – **MOVENTO**	428
Attachment of runners – **TANDEM**	528

The sophisticated runner system



With our sophisticated **MOVENTO** runner system, we provide you with a synchronised feather-light glide, four-dimensional front adjustment, and a dynamic carrying capacity of 40 and 70 kg with high stability and excellent sag values.



Synchronised feather-light glide
The synchronised feather-light glide is a special feature of the **MOVENTO** runner system. The runner components with low-friction cylindrical nylon rollers run uniformly and almost silently – for soft and effortless opening and closing.



4-dimensional adjustment ease
With **MOVENTO**, you can adjust the height, tilt and depth of the front and also modify it at the sides. There is no need to alter the drawer and you get a precise gap layout quickly, easily and without tools.



Carrying capacity and stability
MOVENTO boasts excellent stability and a high load bearing capacity. Thanks to its superb sag values, the runner system is also ideal for applications near to the floor. This makes the full extension with 40 and 70 kg load bearing classes the first choice.



Handle-less options
MOVENTO can be implemented with all 4 motion technologies by Blum. You decide which one best meets your requirements.



Pull-out shelf lock
The pull-out shelf lock for **MOVENTO** engages securely on both sides when the pull-out shelf is fully extended and holds it firmly in place. The pull-out shelf lock can be easily released with one hand thanks to synchronisation.

Runner systems


Symbolic image

Runner systems 408
TANDEM 430
SERVO-DRIVE for **MOVENTO** | **TANDEM** 462
TIP-ON BLUMOTION for **MOVENTO** 502
TIP-ON for **MOVENTO** | **TANDEM** 506

Applications	kg	BLUMOTION by Blum	SERVO-DRIVE by Blum	TIP-ON BLUMOTION by Blum	TIP-ON by Blum	Web code	Page
Locking device feature							
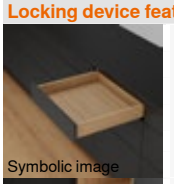 Symbolic image **MOVENTO** with **BLUMOTION** – 760H | 766H	40 60 70	●	○	○	–	DQCZ3Y	412
 Symbolic image **MOVENTO** with **BLUMOTION** – 760H – base fixing – pull-out shelf	40	●	○	○	–	DQGX9A	414
Larder unit							
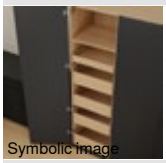 Symbolic image **SPACE TOWER** Cabinet width KB 275–1200 mm	40 60 70	●	○	○	–		416
Narrow cabinets							
 Symbolic image **SPACE TWIN** Cabinet width KB 180–250 mm	20	●	○	○	–	DQE1TC	418

kg Dynamic carrying capacity ● Integrated ○ Optional – Not possible

Accessories


Symbolic image

Pull-out shelf lock 420
Side stabilisation set 422
Depth adjustment 422
Longside gallery rail with chipboard back fixing 423
Fixing bracket for pull-out shelf 423
Corner connectors 424
Gallery rail for pull-out shelf corner connectors 424
Lock-open stop 425
Screws 426
Centre bit 426
Door buffer 426
Screwdriver 427

Attachment of runners

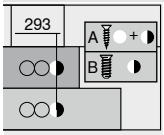

Symbolic image

Runner – 760H – 40 kg 428
Runner – 766H – 60 | 70 kg 428
Runner – 760H – 40 kg – base fixing 428
Cabinet assembly 429

Assembly, removal and adjustment

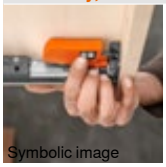
Symbolic image

Assembly, removal and adjustment

Short URL
www.blum.com/a410

Pictograph

Item available on request

Web code – click on the code or enter it in the Product Configurator

MOVENTO with BLUMOTION – 760H | 766H

Web code – click on the code or enter it in the Product Configurator: DQCZ3Y



- Concealed full extension
- Includes integrated, switchable **BLUMOTION S** for soft and effortless closing, and can be combined with **SERVO-DRIVE**, the electrical opening support system, or **TIP-ON BLUMOTION**, the mechanical opening support system
- Synchronised feather-light glide
- Tool-free side, height, and tilt adjustment
- Optional tool-free depth adjustment
- Built-in width and depth tolerance compensation

Space requirement

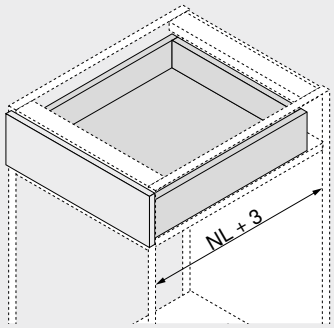

NL Nominal length

Order information

1 Runners left/right

Nominal length NL (mm)	Version: Dynamic carrying capacity (kg) 40	60	70
250[1]	760H2500S		
270	760H2700S		
300	760H3000S		
320	760H3200S		
350	760H3500S		
380	760H3800S		
400	760H4000S		
420	760H4200S		
450	760H4500S		766H4500S
480	760H4800S		
500	760H5000S		766H5000S
520	760H5200S		766H5200S
550	760H5500S		766H5500S
580			766H5800S
600	760H6000S		766H6000S
650			766H6500S
700		766H7000S	
750		766H7500S	

[1] Not compatible with **TIP-ON BLUMOTION**

3 Locking device

Colour	Material	Part no.
Orange	Nylon/steel [1]	T51.7601

[1] Order left/right

Drawer

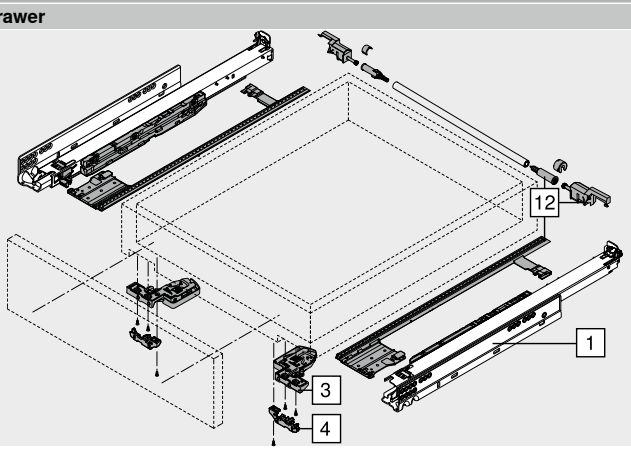

Accessories

4 Depth adjustment left/right[1]

Colour	Material	Part no.
RAL 7037 dust grey	Nylon	298.7600

[1] Only for inset applications
Integrated Blum distance bumper
Suitable for T51.7601 locking device

12 Side stabilisation set[2]

Nominal length NL (mm)[1]	Colour	Part no.
Up to 400	RAL 7037 dust grey	ZS7M400MU
Up to 600		ZS7M600MU
Up to 750		ZS7M750MU

[1] For cutting to size
[2] Suitable for cabinet width KB 1400 mm
We recommend using a side stabiliser with wide pull-outs with a short nominal length

MOVENTO with BLUMOTION – 760H | 766H

Web code – click on the code or enter it in the Product Configurator: DQCZ3Y

Planning

Space requirement in cabinet

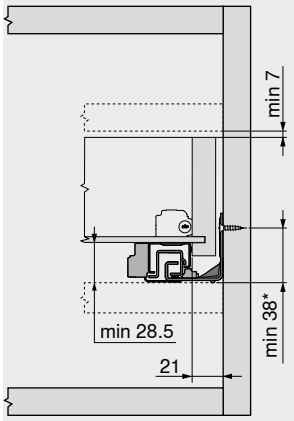

* +1 mm for assembly of the runners prior to cabinet assembly

Drawer | inner drawer

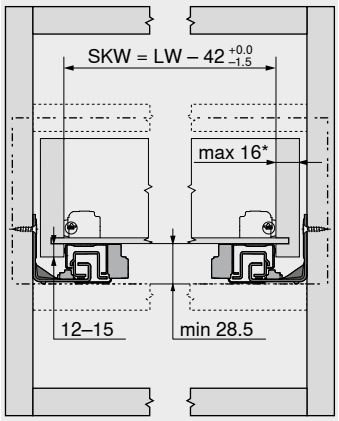

SKW Internal drawer width
LW Internal cabinet width
* Limited side adjustment for a drawer side panel thickness of 16 mm, but with full tolerance utilisation of the internal width of the drawer SKW

Drawer

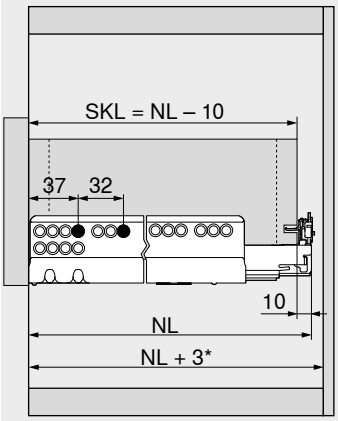

SKL Drawer length
NL Nominal length
* Additional +12 mm with side stabilisation

Inner drawer

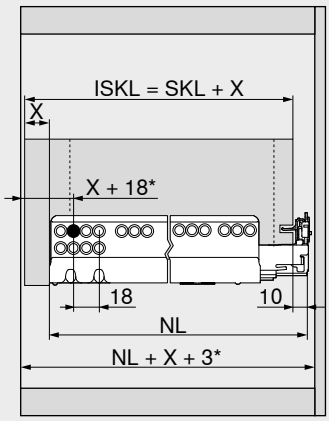

ISKL Inner drawer length
SKL Drawer length
NL Nominal length
X Front thickness
* Additional +3 mm with depth adjustment
* Additional +12 mm with side stabilisation

Drawer assembly

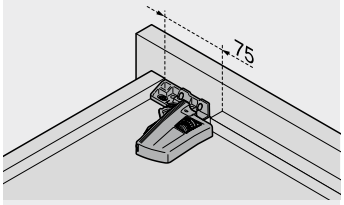

Use drilling template T65.1000.02

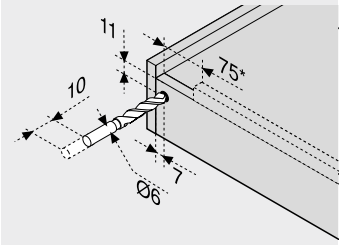

* 125 mm with **TIP-ON BLUMOTION**

Reference pages

Overview	411	Blum services	602	**Assembly, removal and adjustment**	
SERVO-DRIVE for **MOVENTO** | **TANDEM**	462	More technical details	708		
TIP-ON BLUMOTION for **MOVENTO**	502			Short URL www.blum.com/a410	
TIP-ON for **MOVENTO** | **TANDEM**	506				
CABLOXX	594				
Accessories	420				
Attachment of runners	428				

MOVENTO with BLUMOTION – 760H – base fixing – pull-out shelf

Web code – click on the code or enter it in the Product Configurator: DQGX9A



- Concealed full extension
- Includes integrated, switchable **BLUMOTION S** for soft and effortless closing, and can be combined with **SERVO-DRIVE**, the electrical opening support system, or **TIP-ON BLUMOTION**, the mechanical opening support system
- Synchronised feather-light glide
- Tool-free side, height, and tilt adjustment
- Optional tool-free depth adjustment
- Built-in width and depth tolerance compensation
- For assembly to cabinet base panel | shelf
- Also ideal for drawers
- Cannot be combined with pull-out shelf lock

Space requirement

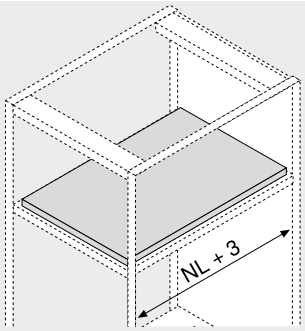

NL Nominal length

Order information

1 Runners for base fixing left/right

Version	BLUMOTION S
Nominal length NL (mm)	Dynamic carrying capacity (kg) 40
350	760H3500SU
400	760H4000SU
450	760H4500SU
500	760H5000SU

3 Locking device

Colour	Material		Part no.
Orange	Nylon/steel	[1]	T51.7601

[1] Order left/right

Accessories

4 Fixing bracket for pull-out shelf

Colour	Material		Part no.
Natural	Nylon	2 x	T51.7000.01

12 Side stabilisation set[2]

Nominal length NL (mm)[1]	Colour	Part no.
Up to 400	RAL 7037 dust grey	ZS7M400MU
Up to 600		ZS7M600MU
Up to 750		ZS7M750MU

[1] For cutting to size
[2] Suitable for cabinet width KB 1400 mm
We recommend using a side stabiliser with wide pull-outs with a short nominal length

Base fixing

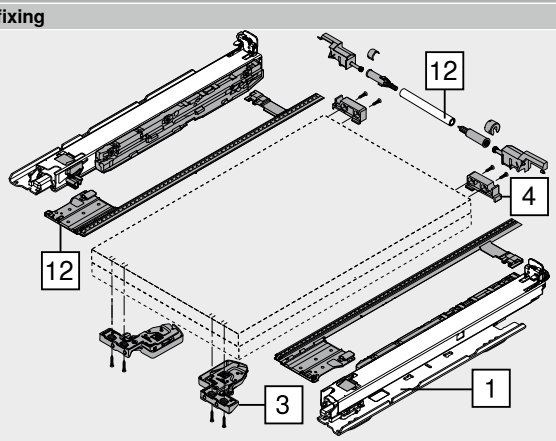

MOVENTO with BLUMOTION – 760H – base fixing – pull-out shelf

Web code – click on the code or enter it in the Product Configurator DQGX9A

Planning

Space requirement in cabinet

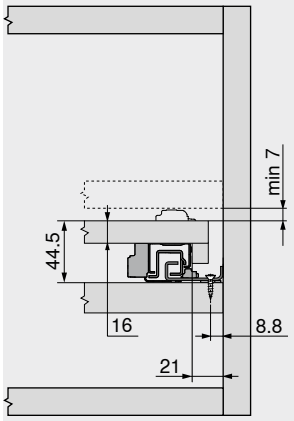

Pull-out shelf

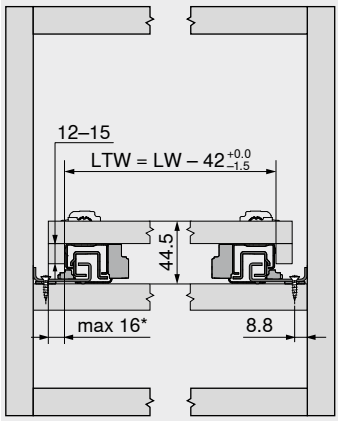

LTW	Internal pull-out shelf width
LW	Internal cabinet width
*	Limited side adjustment for a pull-out shelf side panel thickness of 16 mm, but with full tolerance utilisation of the internal pull-out shelf width LTW

Pull-out shelf

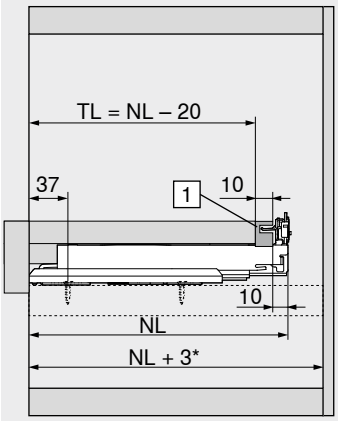

TL	Shelf length
NL	Nominal length
1	Fixing bracket
*	Additional +12 mm with side stabilisation

Inset pull-out shelf

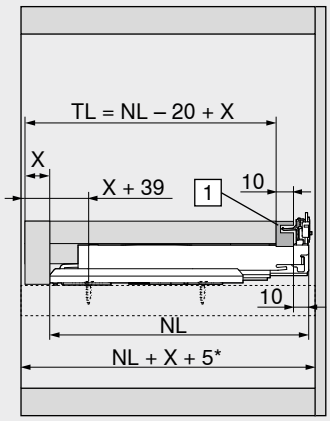

TL	Shelf length
NL	Nominal length
X	Pull-out shelf front piece thickness
1	Fixing bracket
*	Additional +12 mm with side stabilisation

Pull-out shelf assembly

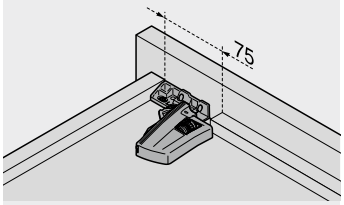

Use drilling template T65.1000.02

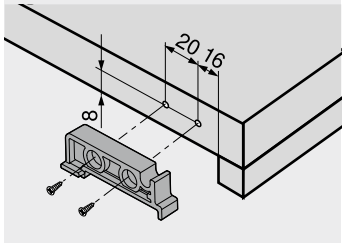

Fixing bracket

Reference pages

Overview	411
SERVO-DRIVE for **MOVENTO** | **TANDEM**	462
TIP-ON BLUMOTION for **MOVENTO**	502
Accessories	420
Attachment of runners	428
Blum services	602
More technical details	708

Assembly, removal and adjustment

Short URL
www.blum.com/a410

SPACE TOWER



- The flexible larder unit with inner pull-outs; with shelves and inner drawers in the upper area
- Easy access from three sides
- Individually opening pull-outs allow for a complete overview and convenient removal from above
- Light operating forces even with heavily-laden pull-outs
- High backs and side panels guarantee secure stocking
- Flexible cabinet dimensions possible

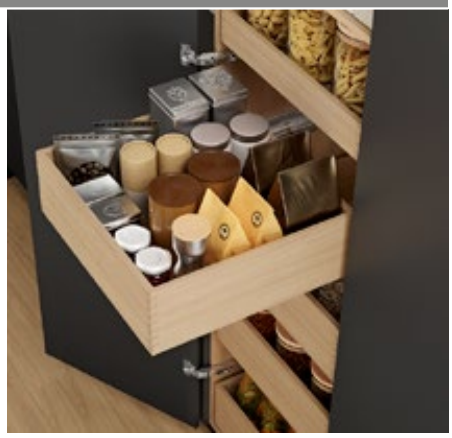

Order information

Application recommendation	Page
MOVENTO with **BLUMOTION** – 760H | 766H	412
CLIP top BLUMOTION 155° hinge	84

Recommendation
Cabinet width KB (mm)
275–1200

Planning

Help with planning and ordering

Short URL
www.blum.com/planningtools

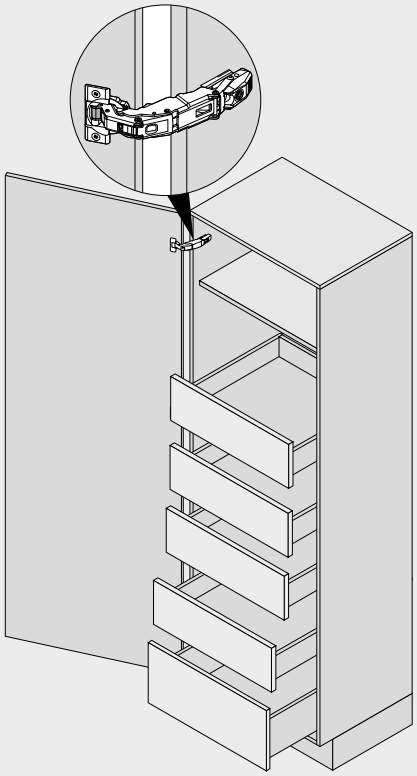

Reference pages

Overview	411	Accessories	420	**Assembly, removal and adjustment**	
SERVO-DRIVE for **MOVENTO** | **TANDEM**	462	Blum services	602		
TIP-ON BLUMOTION for **MOVENTO**	502	More technical details	708	**Short URL**	
CLIP top BLUMOTION 155° hinge	84			**www.blum.com/a410**	
BLUMOTION for doors	176				

SPACE TOWER

Planning

Recommendation

Positioning in the cabinet

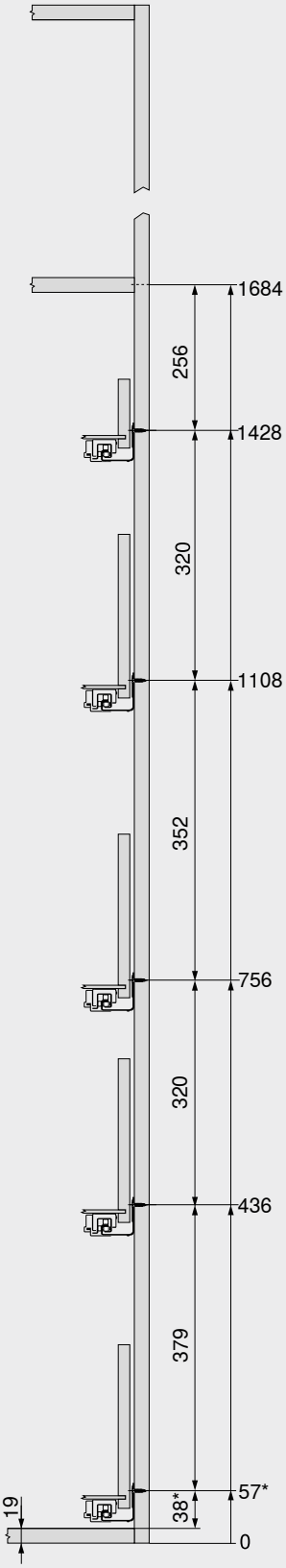

Drilling distances – front

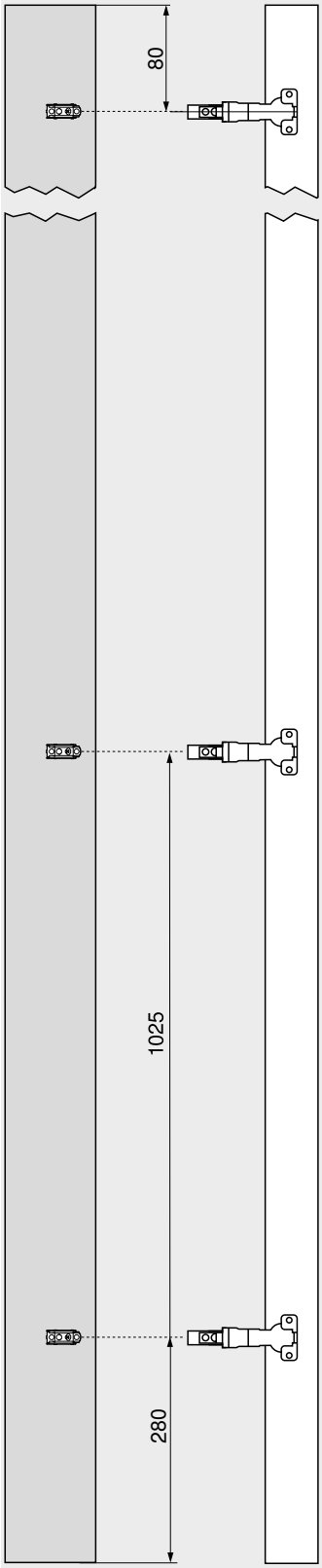

Drilling distances – front

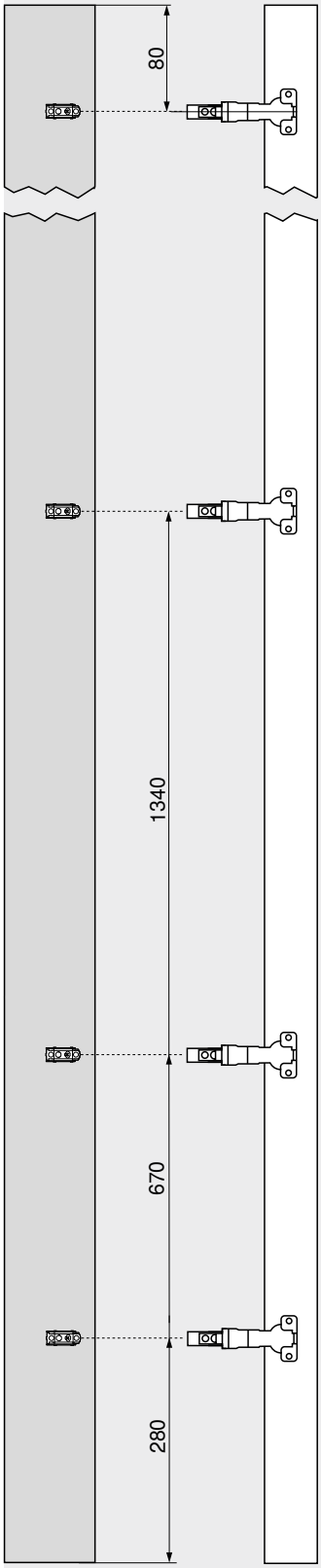

In high cabinets, it is practical to have a shelf at the highest level rather than an inner drawer.

The inner drawer allows access from the side. If the inner drawer is implemented with a higher back, stored goods are prevented from falling down the back.

The option to position the pull-outs at different heights within the cabinet guarantees that no items will be too tall to be stored inside.

The **CLIP top BLUMOTION** 155° hinge without front protrusion allows the cabinet width KB to be put to optimal use.

If the hinge is mounted above the pull-out, the lowest pull-out can be inserted right at the bottom. Turning even those last few centimetres into usable storage space.

* +1 mm if cabinet profile is installed before the cabinet is assembled

Reference pages

Number of hinges 718

SPACE TWIN

Web code – click on the code or enter it in the Product Configurator DQE1TC



- Stable solution thanks to diagonally offset cabinet profiles
- Includes integrated, switchable **BLUMOTION S** soft-close mechanism for soft and effortless closing action
- High dynamic carrying capacity of 20 kg per base cabinet
- Cabinet width KB 180–250 mm

Space requirement

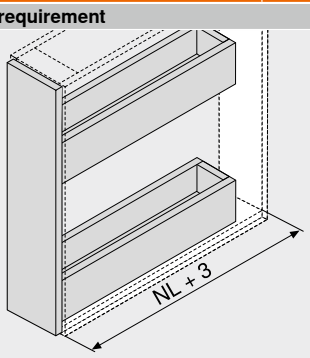

NL Nominal length

Order information

Application recommendation	Page
MOVENTO with **BLUMOTION** – 760H | 766H	412

Cabinet width KB (mm)
180–250

Reference pages

Overview	411
Accessories	420
Blum services	602
More technical details	708

Assembly, removal and adjustment

Short URL
www.blum.com/a410

SPACE TWIN

Web code – click on the code or enter it in the Product Configurator DQE1TC

Planning

Space requirement in cabinet

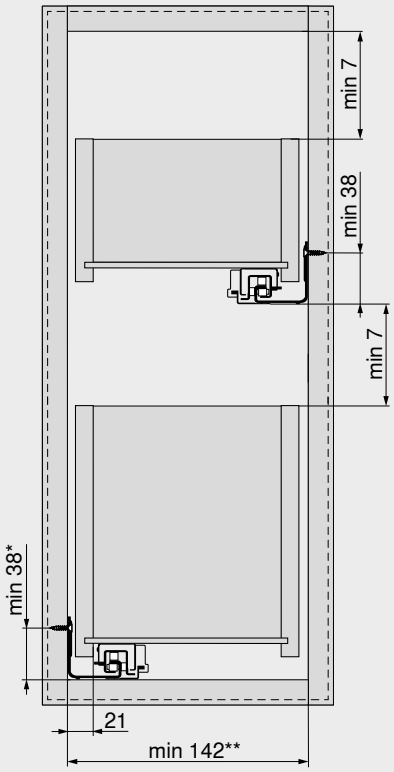

* +1 mm for assembly of the runners prior to cabinet assembly
** 212 mm with **TIP-ON BLUMOTION**

Drawer | inner drawer

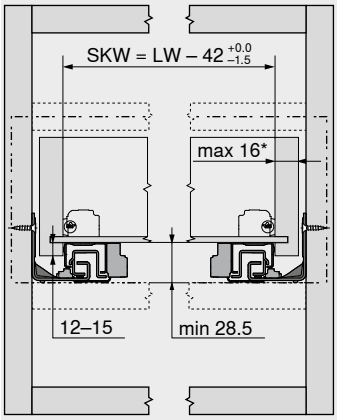

SKW Internal drawer width
LW Internal cabinet width
* Limited side adjustment for a drawer side panel thickness of 16 mm, but with full tolerance utilisation of the internal width of the drawer SKW

Drawer

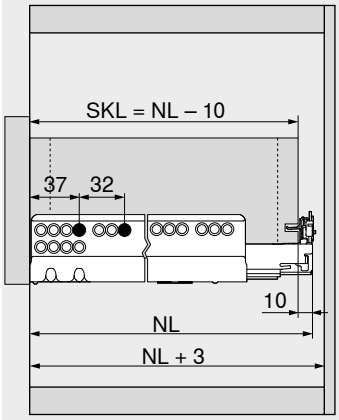

SKL Drawer length
NL Nominal length

Pull-out shelf lock



- Cannot be used with runners for base fixing
- Can be combined with **BLUMOTION**, **TIP-ON BLUMOTION** and **TIP-ON**
- Two-sided locking mechanism
- Secure hold
- Pull-out shelf lock can be released with one hand thanks to synchronisation shaft
- Easy assembly – fittings serve as template
- Runners are attached to standard fixing positions
- Max. cabinet width 1200 mm

Space requirement

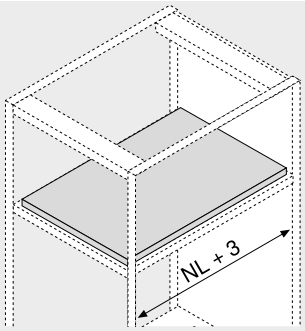

NL Nominal length

Order information

12		Pull-out shelf lock[1]		
		Runners	**Colour**	**Part no.**
		760H | 766H	Orion grey matt	295H5700

Consisting of:

12a	2 x	Locking mechanism unit Fixing only possible with chipboard screws
12b	2 x	Latching element Fixing possible with chipboard and system screws
–	1 x	Installation instructions

[1] During assembly of the pull-out shelf lock, make sure that you leave the tilt adjustment at the factory setting!
We recommend using a side stabiliser with wide pull-outs with a short nominal length. This improves the engagement of the locking unit.

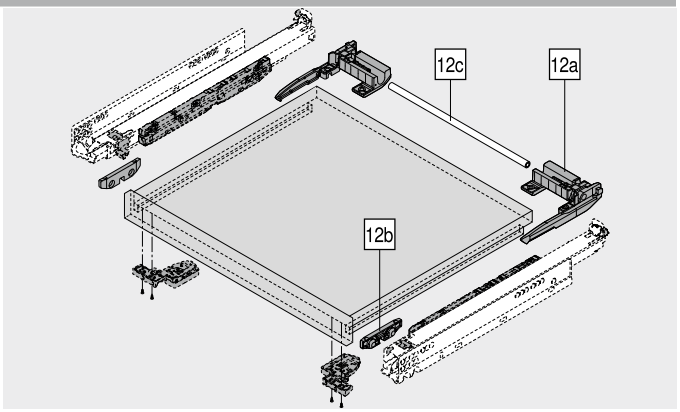

12c		Synchronisation linkage[2]		
		Version	**Length (mm)[1]**	**Part no.**
		Round	1089	ZST.1089W
			1160	ZST.1160W

Cutting 12c Internal cabinet width LW – 87 mm ±1 mm

[1] For cutting to size
[2] Pull-out shelf lock can be released with one hand thanks to synchronisation shaft

Accessories

–		Chipboard screws		
		Diameter (mm)	**Length (mm)**	**Part no.**
		Ø 3.5	15.0	609.1500

–		System screw		
		Diameter (mm)	**Length (mm)**	**Part no.**
		Ø 6.0	14.5	661.1450.HG

Planning

Pull-out shelf assembly

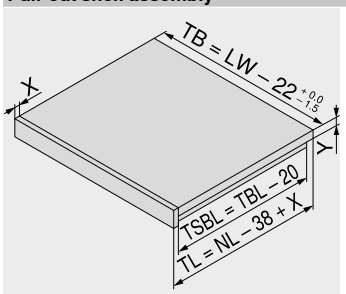

NL	Nominal length
LW	Internal cabinet width
TB	Shelf width
TL	Shelf length
TBL	Pull-out shelf base length
TSBL	Pull-out shelf side panel length
X	Pull-out shelf front piece thickness
Y	Pull-out shelf base thickness

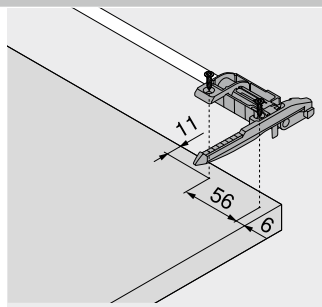

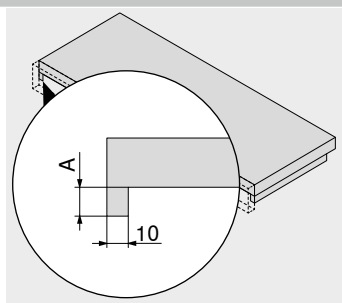

Single pull-out shelf base	
Runners	**A (mm)**
760H | 766H	12–15

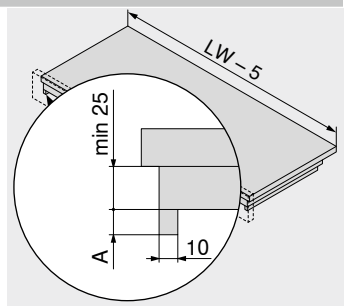

Double pull-out shelf base	
Runners	**A (mm)**
760H | 766H	12–15

Pull-out shelf lock

Planning

MOVENTO – 760H | 766H

Space requirement in cabinet

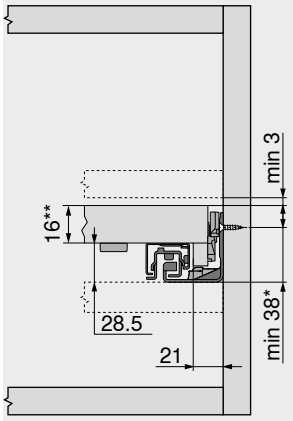

* +1 mm for assembly of the runners prior to cabinet assembly
** Min. 25 mm when installed in compartment

Pull-out shelf

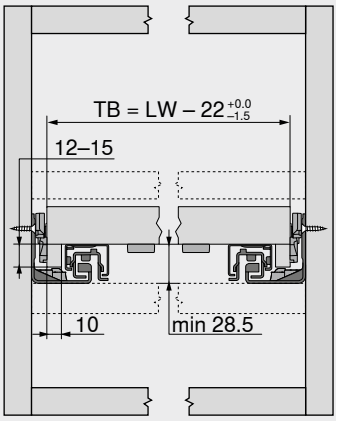

TB Shelf width
LW Internal cabinet width
Limited side adjustment

Pull-out shelf

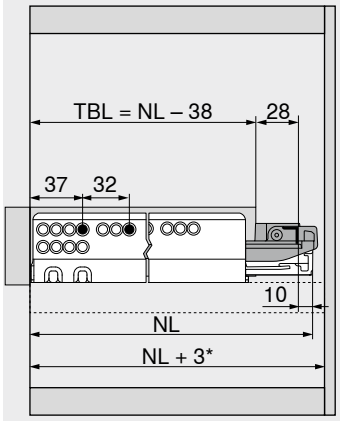

TBL Pull-out shelf base length
NL Nominal length
* Additional +12 mm with side stabilisation

Inset pull-out shelf

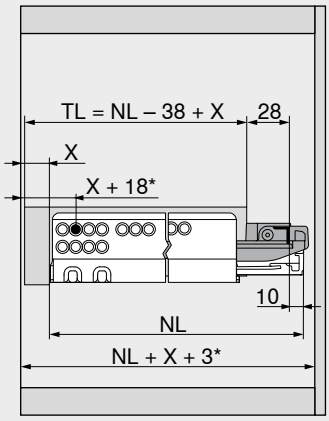

TL Shelf length
NL Nominal length
X Pull-out shelf front piece thickness
* Additional +3 mm with depth adjustment or additional +4 mm with **TIP-ON**

Reference pages

Overview	411	**Pull-out shelf lock**	
TIP-ON BLUMOTION for **MOVENTO**	502		
TIP-ON for **MOVENTO** | **TANDEM**	506	Short URL	
		www.blum.com/i010	
Attachment of runners	428	**Assembly, removal and adjustment**	
Blum services	602		
More technical details	708		
		Short URL	
		www.blum.com/a410	

Side stabilisation set

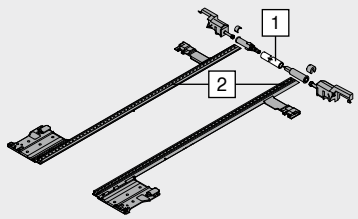

- For cutting to size
- Suitable for cabinet width KB 1400 mm
- Compatible with all **MOVENTO** motion technologies
- We recommend using a side stabiliser with wide pull-outs with a short nominal length
- Colour: RAL 7037 dust grey
- Material: nylon

Order information

Nominal length NL (mm)	Part no.
Up to 400	ZS7M400MU
Up to 600	ZS7M600MU
Up to 750	ZS7M750MU

Cutting

1 Internal cabinet width LW – 315 mm
2 Nominal length NL + 10 mm

Planning

Space requirement in cabinet

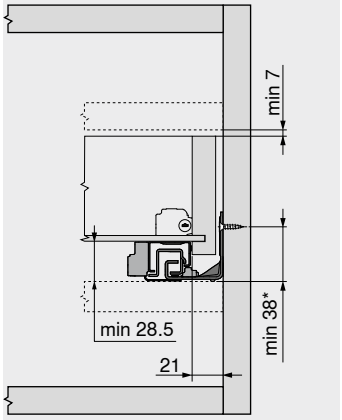

* +1 mm for assembly of the runners prior to cabinet assembly

Drawer

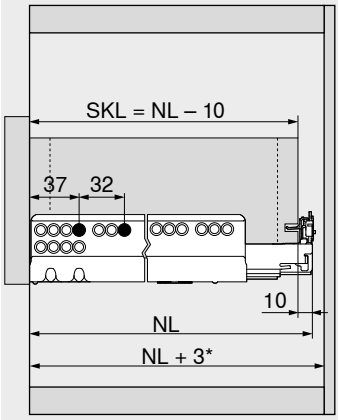

SKL Drawer length
NL Nominal length
* Additional +12 mm with side stabilisation

Space requirement in cabinet

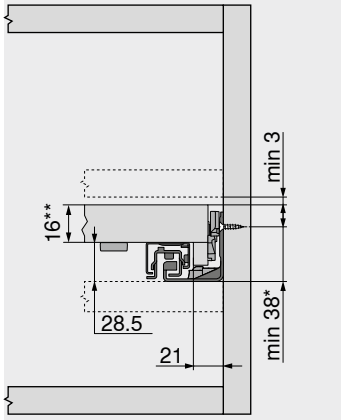

Pull-out shelf lock
* +1 mm for assembly of the runners prior to cabinet assembly
** Min. 25 mm when installed in compartment

Pull-out shelf

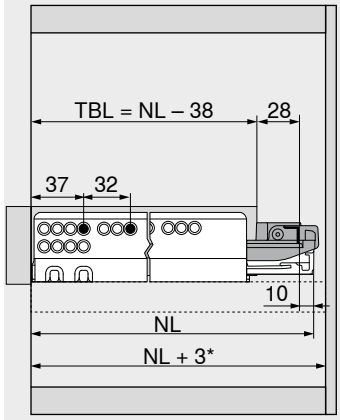

Pull-out shelf lock
TBL Pull-out shelf base length
NL Nominal length
* Additional +12 mm with side stabilisation

Depth adjustment



- Only for inset applications
- Integrated Blum distance bumper
- Suitable for T51.7601 locking device
- Left | right
- Colour: RAL 7037 dust grey
- Material: nylon

Order information

Colour	Material	Part no.
RAL 7037 dust grey	Nylon	298.7600

Assembly

Assembly, removal and adjustment

Short URL
www.blum.com/a410

Longside gallery rail with chipboard back fixing



- Colour: anodised stainless steel appearance
- Material: aluminium

Order information

Nominal length NL (mm)	Part no.
400	ZRE.363A.ID
450	ZRE.413A.ID
480	ZRE.443A.ID
500	ZRE.463A.ID
520	ZRE.483A.ID
550	ZRE.513A.ID
580	ZRE.543A.ID
600	ZRE.563A.ID
650	ZRE.613A.ID

Planning

Space requirement in cabinet

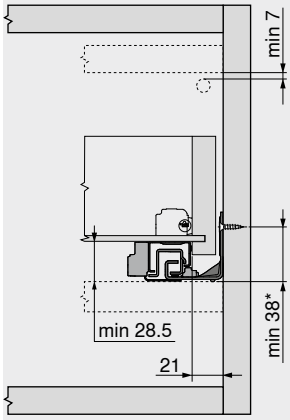

* +1 mm for assembly of the runners prior to cabinet assembly

Installation dimensions – back

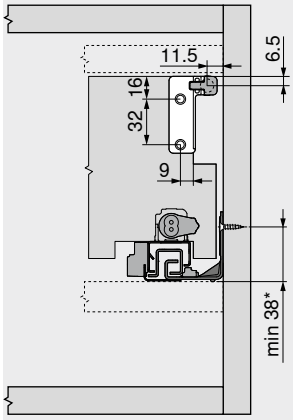

* +1 mm for assembly of the runners prior to cabinet assembly

Assembly

Assembly, removal and adjustment

Short URL
www.blum.com/a410

Fixing bracket for pull-out shelf



- Compatible with **MOVENTO** | **TANDEM**
- Not required when using pull-out shelf lock

Order information

Colour	Material	Part no.
Natural	Nylon	T51.7000.01

Assembly

Assembly, removal and adjustment

Short URL
www.blum.com/a410

Corner connectors

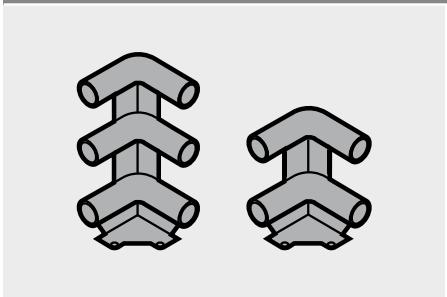

- Colour: RAL 7037 dust grey
- Material: nylon

Order information

Version	Part no.
2 tier	ZTU.00Z0
3 tier	ZTU.00D0

Planning

Space requirement in cabinet With 2 tier gallery

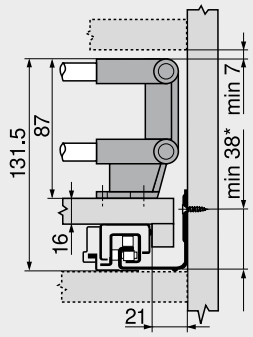

* +1 mm for assembly of the runners prior to cabinet assembly

Space requirement in cabinet With 3 tier gallery

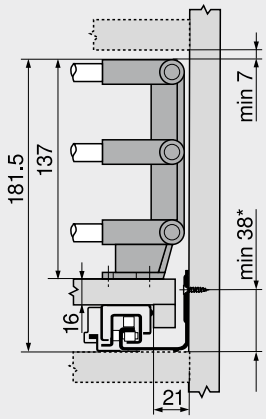

* +1 mm for assembly of the runners prior to cabinet assembly

Installation dimensions – corner connectors

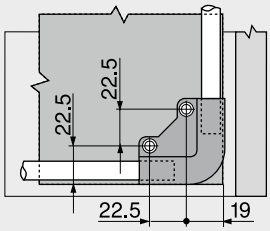

Gallery rail for pull-out shelf corner connectors

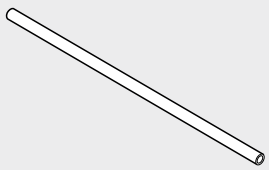

- For cutting to size, 1094 mm
- Suitable for cabinet width KB 1200 mm

Order information

Colour	Material	Part no.
Anodised stainless steel appearance	Aluminium	ZRG.1094U

Cutting

Cabinet width KB – 106 mm
Nominal length NL – 64 mm

Lock-open stop



- Lock-open stop

Order information

Colour	Material	Part no.
White	Nylon	295.5600

Planning

Pull-out shelf

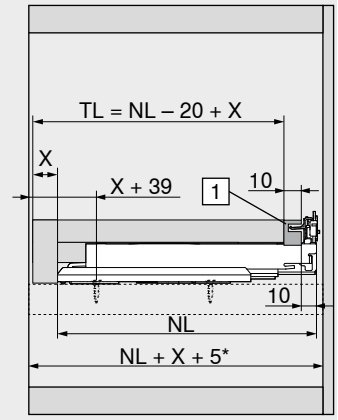

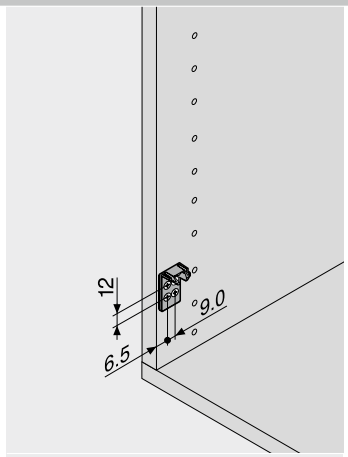

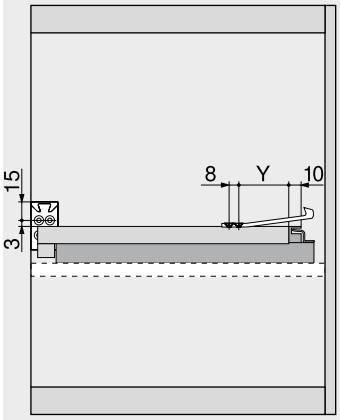

TL	Shelf length
NL	Nominal length
X	Pull-out shelf front piece thickness
1	Fixing bracket

Nominal length NL (mm)	Y (mm) 760H	766H
250	77	–
270	72	–
300	72	–
320	72	–
350	72	–
380	72	–
400	72	–
420	72	–
450	72	72
480	72	–
500	72	72
520	72	72
550	72	72
580	–	72
600	72	72
650	–	72
700	–	72
750	–	72

Chipboard screws – Ø 3.5 mm



- Colour: nickel plated
- Material: steel

Order information		
Length X (mm)	Diameter (mm)	Part no.
15.0	Ø 3.5	609.1500
17.0		609.1700

System screw – Ø 6.0 mm

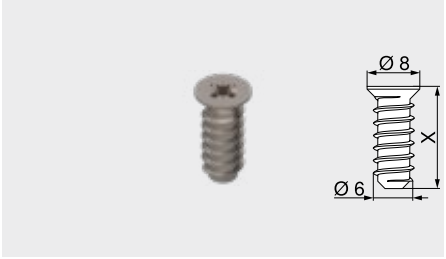

- Drilling diameter Ø 5 mm
- Colour: nickel plated
- Material: steel

Order information		
Length X (mm)	Diameter (mm)	Part no.
10.0	Ø 6.0	661.1000.HG
11.5		661.1150.HG
13.0		661.1300.HG
14.5		661.1450.HG
20.0		661.2000.HG

Centre bit



- To pre-drill for Ø 3.5 mm chipboard screws
- Drilling depth up to 8 mm
- Material: steel, hardened

Order information		
Description	Diameter (mm)	Part no.
Centre bit	Ø 2.7	M01.ZZ03.01
Replacement bit		M01.ZZB3

Stick-on door buffer

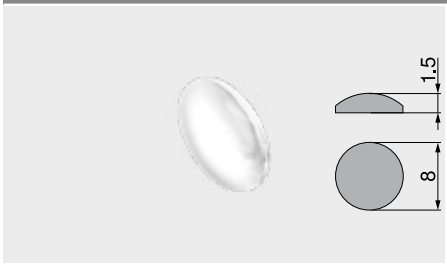

- For noise reduction
- Colour: natural coloured
- Material: nylon

Order information	
Diameter (mm)	Part no.
Ø 8.0	993.710

8 mm Ø door buffer

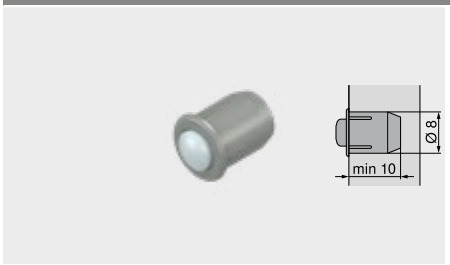

- For noise reduction
- Two-part
- Colour: RAL 9006 grey
- Material: nylon

Order information	
Diameter (mm)	Part no.
Ø 8.0	993.706

Pozidrive screwdriver



- Orange handle with Blum logo
- Colour: black/orange
- Material: nylon/steel

Order information

Tool support	Total length (mm)	Part no.
Pozidriv PZ 2	210	303.756.1

Slotted screwdriver



- Orange handle with Blum logo
- Colour: black/orange
- Material: nylon/steel

Order information

Tool support	Total length (mm)	Part no.
Slotted, size 1	200	314.928.1

Runner – 760H – 40 kg

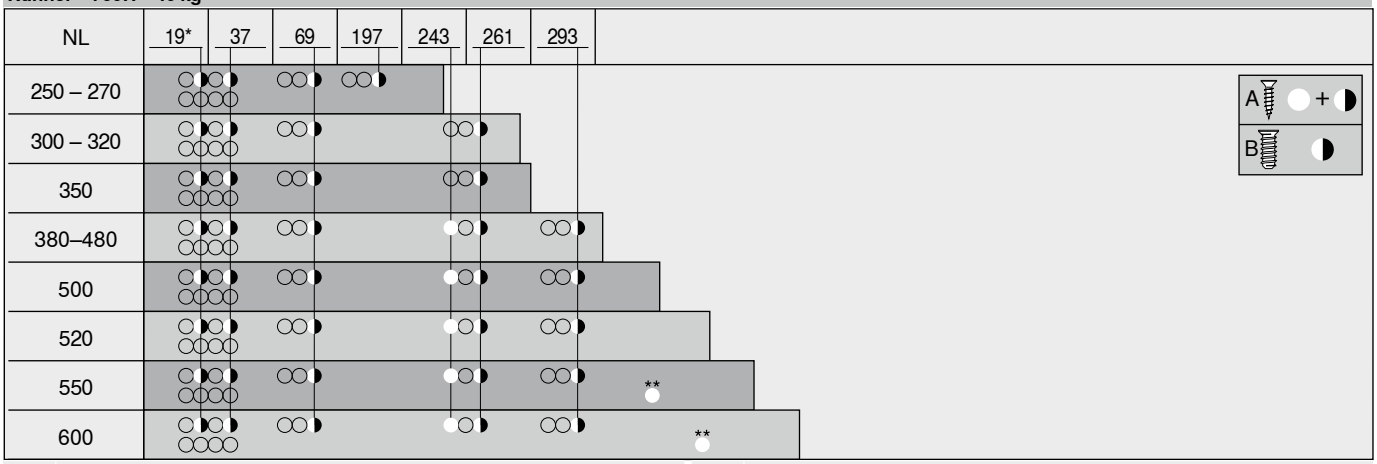

NL	Nominal length	*	Can be replaced with chipboard screw Ø 3.5 x 15 mm
A	Chipboard screws Ø 3.5 x 15 mm, part no. 609.1500	**	Optional for greater stability
B	System screws Ø 6 x 14.5 mm, part no. 661.1450.HG		

Runner – 766H – 60 | 70 kg

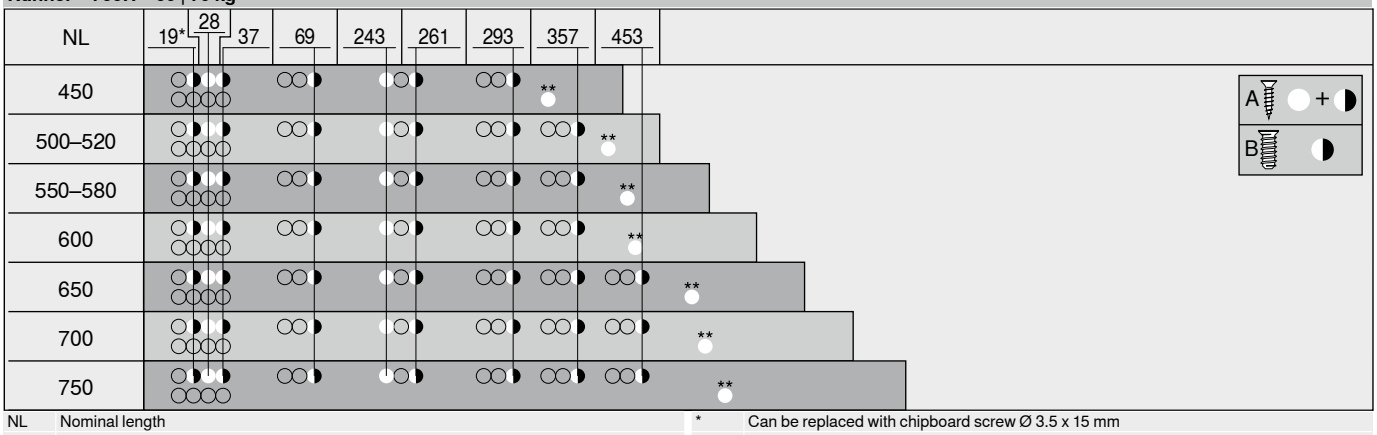

NL	Nominal length	*	Can be replaced with chipboard screw Ø 3.5 x 15 mm
A	Chipboard screws Ø 3.5 x 15 mm, part no. 609.1500	**	Optional for greater stability
B	System screws Ø 6 x 14.5 mm, part no. 661.1450.HG		

Runner – 760H – 40 kg – base fixing

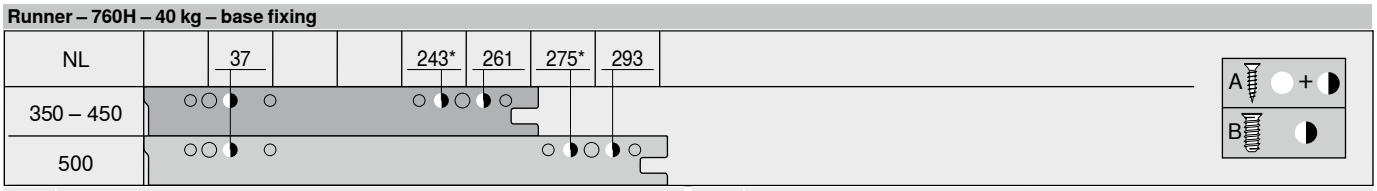

NL	Nominal length	*	Can be replaced with chipboard screw Ø 4 x 15 mm
A	Chipboard screws Ø 4 x 15 mm		
B	System screws Ø 6 x 14.5 mm, part no. 661.1450.HG		

Cabinet assembly

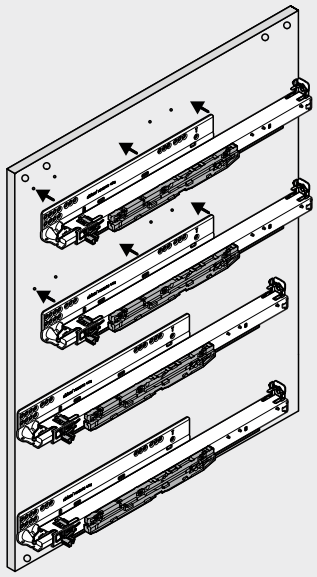

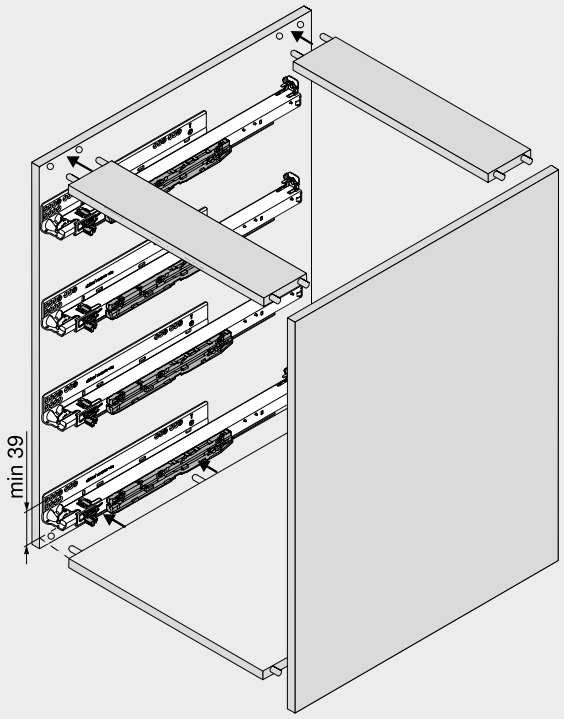

If you install runners before cabinet assembly, the fixing position must be increased by at least 1 mm from 38 to at least 39 mm due to tolerances in the runner and cabinet!

The versatile runner system



TANDEM ensures that you have flexible design options with our versatile runner systems. Choose from a broad selection of nominal lengths, various types of extensions as well as optional motion technologies for soft and effortless opening and closing.



TANDEM smooth running action
Smooth running action, dampened rail transitions and low-friction cylindrical nylon roller runners. This is the quality recognised all over the world.



Integrated TANDEM TIP-ON
The **TANDEM** range is available with an integrated opening support system – enhanced convenience for your customers, less effort for you. All you need is the runners and a one-piece synchronisation linkage for assembly.



Stability
With **TANDEM**, you can use pull-outs that are near the floor as well as extra wide, high and deep pull-outs. The runner is stable and has good sag values – even when the drawer is fully loaded.



Pull-out shelf lock
When the pull-out shelf is extended fully, the pull-out shelf lock engages for **TANDEM** securely and on both sides. The pull-out shelf lock can be easily released with one hand thanks to synchronisation.

Runner systems


Symbolic image

Runner systems 408
MOVENTO 410
SERVO-DRIVE for **MOVENTO** | **TANDEM** 462
TIP-ON for **MOVENTO** | **TANDEM** 506

Overview


Symbolic image

Overview – runners 432

Accessories


Symbolic image

Pull-out shelf lock 452
Side stabilisation set 455
Longside gallery rail with chipboard back fixing 456
Front adjuster 456
POSISTOP 457
Screws 457
Centre bit 457
Door buffer 457
Screwdriver 458

Attachment of runners

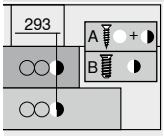

Symbolic image

Runner – 560H – 30 kg 460
Runner – 550H – 30 kg 460
Runner – 561H – 30 kg 460
Runner – 551H – 30 kg 460
Runner – 560F – 30 kg 461
Runner – 550F – 30 kg 461
Runner – 561F – 30 kg 461
Runner – 551F – 30 kg 461

Assembly, removal and adjustment

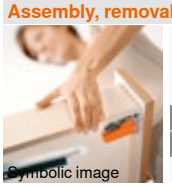
Symbolic image

Assembly, removal and adjustment

Short URL
www.blum.com/a420

Pictograph

Item available on request

Web code – click on the code or enter it in the Product Configurator

TANDEM 11–16 mm

Applications	kg	BLUMOTION by Blum	SERVO-DRIVE by Blum	TIP-ON BLUMOTION by Blum	TIP-ON by Blum	Web code	Page
TANDEM – locking device feature							
 **TANDEM** full extension with **BLUMOTION** – 560H	30	●	○	–	–	DQD1XA	434
 **TANDEM** single extension with **BLUMOTION** – 550H	30	●	○	–	–	DQD3BY	436
TANDEM – hook and peg variant							
 **TANDEM** full extension with **BLUMOTION** – 561H	30	●	○	–	–	DQD4QM	438
 **TANDEM** single extension with **BLUMOTION** – 551H	30	●	○	–	–	DQD65A	440

kg Dynamic carrying capacity ● Integrated ○ Optional – Not possible

Web code – click on the code or enter it in the Product Configurator

TANDEM 17–19 mm

Applications		kg	BLUMOTION by Blum	SERVO-DRIVE by Blum	TIP-ON BLUMOTION by Blum	TIP-ON by Blum	Web code	Page
TANDEM 19 mm – locking device feature								
	**TANDEM** full extension with **BLUMOTION** – 560F	30	●	○	–	–	DQHL6M	442
	**TANDEM** single extension with **BLUMOTION** – 550F	30	●	○	–	–	DQHMLA	444
TANDEM 19 mm – hook and peg variant								
	**TANDEM** full extension with **BLUMOTION** – 561F	30	●	○	–	–	DQHNZY	446
	**TANDEM** single extension with **BLUMOTION** – 551F	30	●	○	–	–	DQHPEM	448

TANDEM 11–16 mm | TANDEM 17–19 mm

Applications		kg	BLUMOTION by Blum	SERVO-DRIVE by Blum	TIP-ON BLUMOTION by Blum	TIP-ON by Blum	Web code	Page
Larder unit								
	**SPACE TOWER** Cabinet width KB 275–1200 mm	30	●	○	–	–		450

kg Dynamic carrying capacity ● Integrated ○ Optional – Not possible

Web code – click on the code or enter it in the Product Configurator

TANDEM full extension with BLUMOTION – 560H

Web code – click on the code or enter it in the Product Configurator: DQD1XA



- Runner for wooden drawers with a panel thickness of **11–16 mm**
- Concealed **TANDEM** full extension with integrated **BLUMOTION** soft-close mechanism for soft and effortless closing action
- Suitable for use with **SERVO-DRIVE** – the electrical opening support system
- Low-friction cylindrical rollers ensure a feather-light glide
- Tool-free height adjustment via a locking device
- Tool-free integrated front tilt adjustment
- Built-in width and depth tolerance compensation

Space requirement

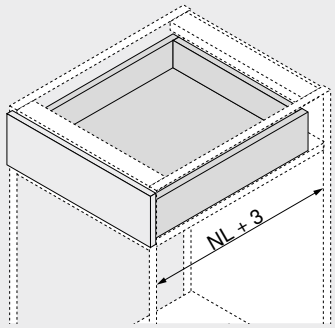

NL Nominal length

Order information

1 Runners left/right

Version	BLUMOTION
Nominal length NL (mm)	Dynamic carrying capacity (kg) 30
250	560H2500B
270	560H2700B
300	560H3000B
320	560H3200B
350	560H3500B
380	560H3800B
400	560H4000B
420	560H4200B
450	560H4500B
480	560H4800B
500	560H5000B
520	560H5200B
550	560H5500B
600	560H6000B

3 Locking device

Colour	Material		Part no.
Orange	Nylon/zinc	[1]	T51.1700.04

[1] Order left/right

Accessories

4 Front adjuster

Colour	Material		Part no.
Natural	Nylon	2 x	295.1000

5 POSISTOP[1]

Colour	Material		Part no.
RAL 7037 dust grey	Nylon	2 x	298.5500

[1] Depth stop

12 Side stabilisation set – full extension[2]

Nominal length NL (mm)[1]	Colour	Part no.
Up to 410	RAL 7037 dust grey	ZST.410TV
Up to 600		ZST.600TV
Up to 750		ZST.750TV

[1] For cutting to size

[2] Suitable for cabinet width KB 1400 mm
We recommend using a side stabiliser with wide pull-outs with a short nominal length

Drawer

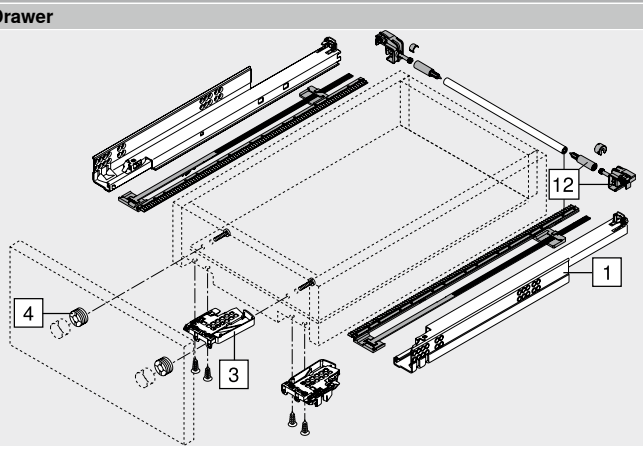

Inner drawer

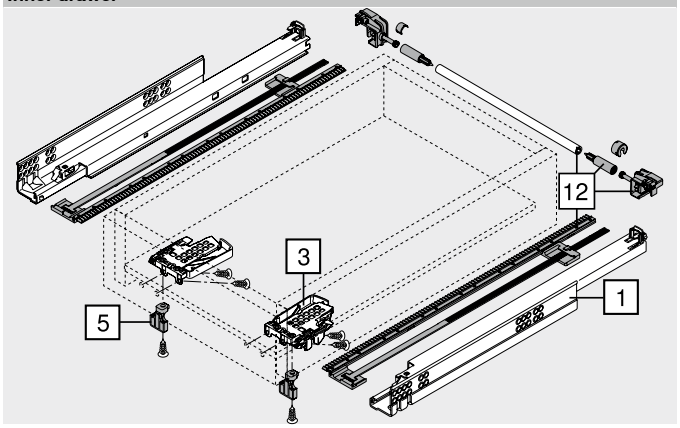

TANDEM full extension with BLUMOTION – 560H

Web code – click on the code or enter it in the Product Configurator: DQD1XA

Planning

Space requirement in cabinet

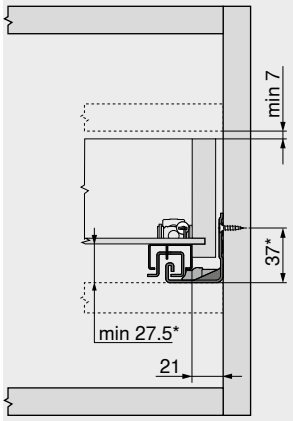

* +3 mm with side stabilisation

Drawer | inner drawer

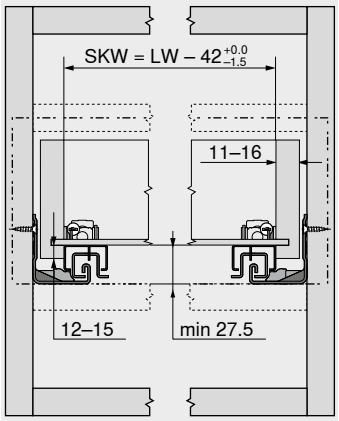

SKW Internal drawer width
LW Internal cabinet width

Drawer

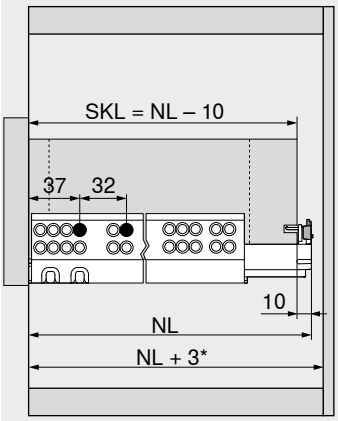

SKL Drawer length
NL Nominal length
* Additional +12 mm with side stabilisation

Inner drawer

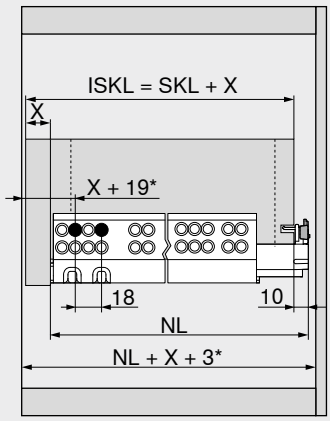

ISKL Inner drawer length
SKL Drawer length
NL Nominal length
X Front thickness
* Additional +2 mm with **POSISTOP**

Drawer assembly

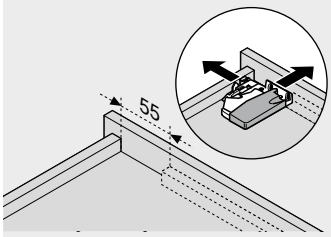

Use drilling template T65.1000.02

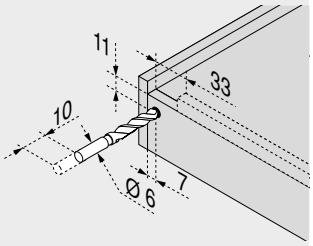

Use drilling template T65.1000.02

Reference pages

Overview	431
SERVO-DRIVE for **MOVENTO** | **TANDEM**	462
TIP-ON for **MOVENTO** | **TANDEM**	506
CABLOXX	594
Accessories	452
Attachment of runners	460
Blum services	602
More technical details	708

Assembly, removal and adjustment

Short URL
www.blum.com/a420

TANDEM single extension with BLUMOTION – 550H

Web code – click on the code or enter it in the Product Configurator: DQD3BY



- Runner for wooden drawers with a panel thickness of **11–16 mm**
- Concealed **TANDEM** single extension with soft end stop when opening and integrated **BLUMOTION** soft-close mechanism for soft and effortless closing
- Suitable for use with **SERVO-DRIVE** – the electrical opening support system
- Low-friction cylindrical rollers ensure a feather-light glide
- Tool-free height adjustment via a locking device
- Built-in width and depth tolerance compensation

Space requirement

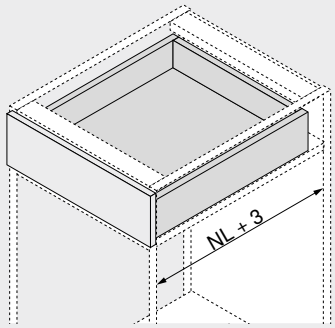

NL Nominal length

Order information

1	Runners left/right		
	Version	BLUMOTION	
Nominal length NL (mm)	Dynamic carrying capacity (kg)		
	30		
270	550H2700B		
300	550H3000B		
350	550H3500B		
400	550H4000B		
450	550H4500B		
500	550H5000B		
550	550H5500B		
600	550H6000B		
650	550H6500B		

3	Locking device		
	Colour	Material	Part no.
	Orange	Nylon/zinc [1]	T51.1700.04

[1] Order left/right

Accessories

4	Front adjuster		
	Colour	Material	Part no.
	Natural	Nylon 2 x	295.1000

5	POSISTOP[1]		
	Colour	Material	Part no.
	RAL 7037 dust grey	Nylon 2 x	298.5500

[1] Depth stop

12	Side stabilisation set – single extension[2]		
	Nominal length NL (mm)[1]	Colour	Part no.
	Up to 410	RAL 7037 dust grey	ZST.410TT
	Up to 650		ZST.650TT

[1] For cutting to size
[2] Suitable for cabinet width KB 1400 mm
We recommend using a side stabiliser with wide pull-outs with a short nominal length

Drawer

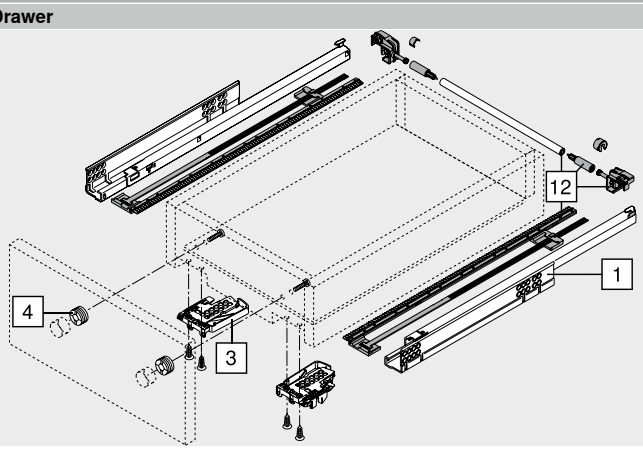

Inner drawer

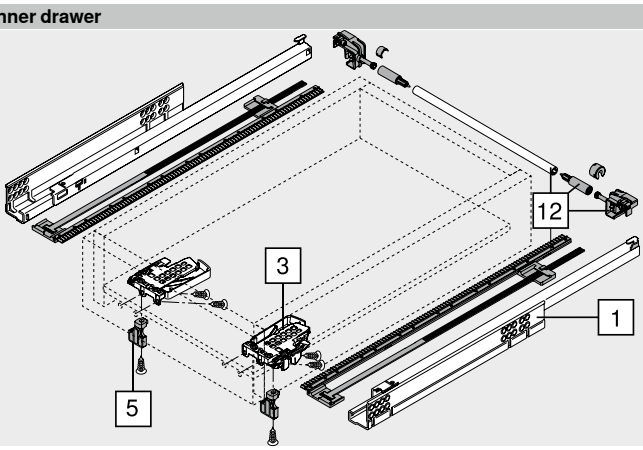

TANDEM single extension with BLUMOTION – 550H

Web code – click on the code or enter it in the Product Configurator: DQD3BY

Planning

Space requirement in cabinet

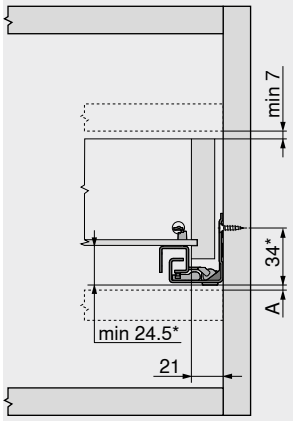

A	3 mm distance to interchange with full extension
*	+3 mm with side stabilisation

Drawer | inner drawer

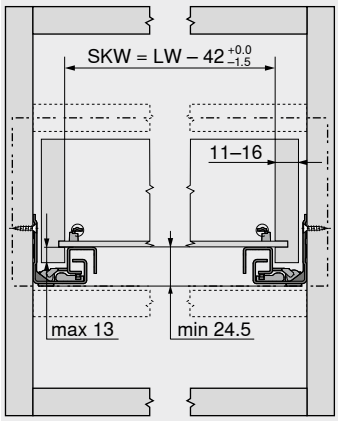

SKW	Internal drawer width
LW	Internal cabinet width

Drawer

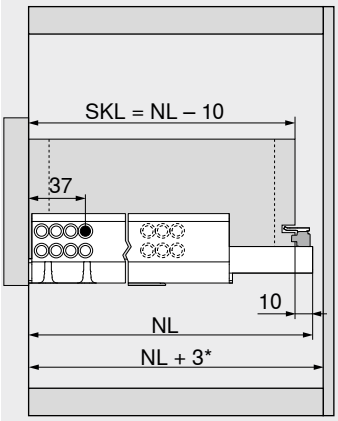

SKL	Drawer length
NL	Nominal length
*	Additional +12 mm with side stabilisation

Inner drawer

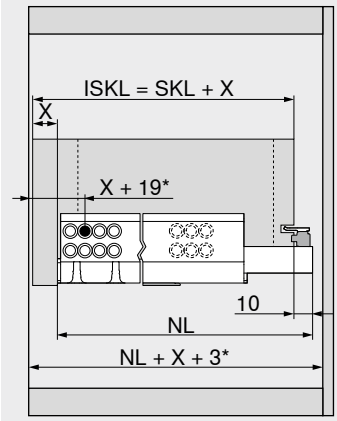

ISKL	Inner drawer length
SKL	Drawer length
NL	Nominal length
X	Front thickness
*	Additional +2 mm with **POSISTOP**

Drawer assembly

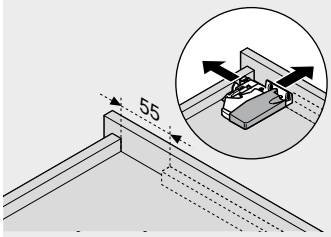

Use drilling template T65.1000.02

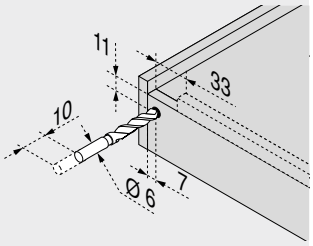

Use drilling template T65.1000.02

Reference pages

Overview	431
SERVO-DRIVE for **MOVENTO** | **TANDEM**	462
TIP-ON for **MOVENTO** | **TANDEM**	506
CABLOXX	594
Accessories	452
Attachment of runners	460
Blum services	602
More technical details	708

Assembly, removal and adjustment

Short URL
www.blum.com/a420

TANDEM full extension with BLUMOTION – 561H

Web code – click on the code or enter it in the Product Configurator: DQD4QM



- Runner for wooden drawers with a panel thickness of **11–16 mm**
- Concealed **TANDEM** full extension with integrated **BLUMOTION** soft-close mechanism for soft and effortless closing action
- Suitable for use with **SERVO-DRIVE** – the electrical opening support system
- Low-friction cylindrical rollers ensure a feather-light glide
- Lift-off stop and height adjustment integrated into runner system
- Tool-free integrated front tilt adjustment

Space requirement

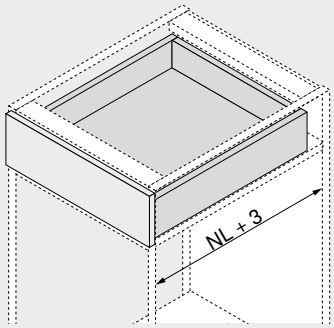

NL Nominal length

Order information

1 Runners left/right

Version	BLUMOTION		
Nominal length NL (mm)	Dynamic carrying capacity (kg) 30		
260	561H2601B		
285	561H2851B		
310	561H3101B		
335	561H3351B		
360	561H3601B		
385	561H3851B		
410	561H4101B		
435	561H4351B		
460	561H4601B		
485	561H4851B		
510	561H5101B		
535	561H5351B		
560	561H5601B		

Accessories

4 Front adjuster

Colour	Material		Part no.
Natural	Nylon	2 x	295.1000

12 Side stabilisation set – full extension[2]

Nominal length NL (mm)[1]	Colour	Part no.
Up to 410	RAL 7037 dust grey	ZST.410TV
Up to 600		ZST.600TV

[1] For cutting to size
[2] Suitable for cabinet width KB 1400 mm
We recommend using a side stabiliser with wide pull-outs with a short nominal length

Drawer

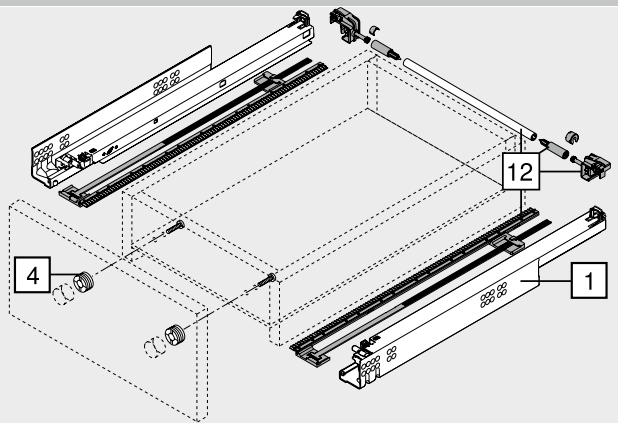

Inner drawer

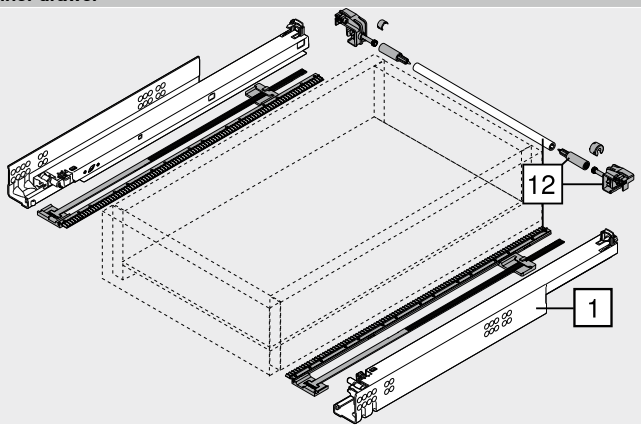

TANDEM full extension with BLUMOTION – 561H

Web code – click on the code or enter it in the Product Configurator: DQD4QM

Planning

Space requirement in cabinet

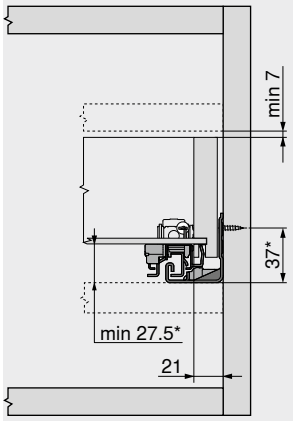

* +3 mm with side stabilisation

Drawer | inner drawer

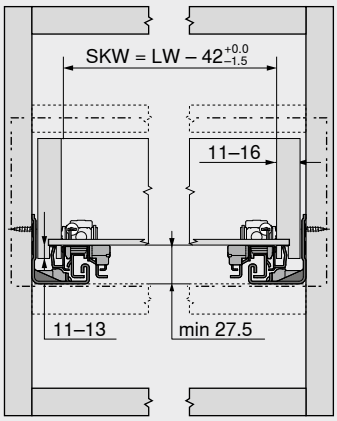

SKW Internal drawer width
LW Internal cabinet width

Drawer

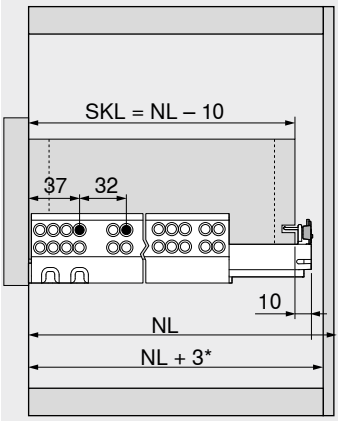

SKL Drawer length
NL Nominal length
* Additional +12 mm with side stabilisation

Inner drawer

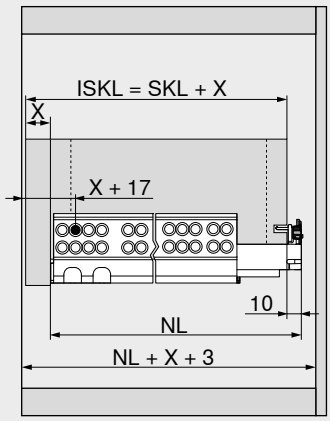

ISKL Inner drawer length
SKL Drawer length
NL Nominal length
X Front thickness

Drawer assembly

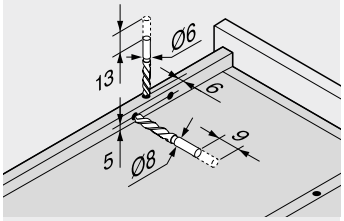

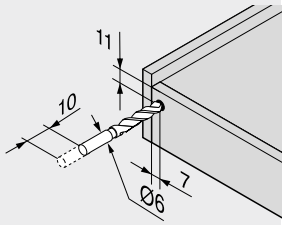

Use drilling template T65.1000.02

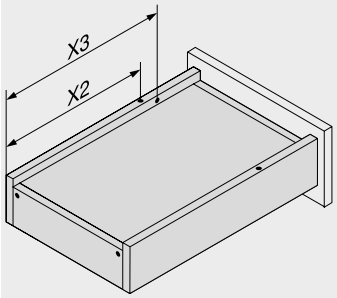

Nominal length	Pegs	Lift-off stop
NL (mm)	X2 (mm)	X3 (mm)
260	205	185
285	220	200
310	230	242
335	245	257
360	275	287
385	285	297
410	300	344
435	310	354
460	335	379
485	350	394
510	360	436
535	375	451
560	405	481

Reference pages

Overview	431
SERVO-DRIVE for **MOVENTO** | **TANDEM**	462
TIP-ON for **MOVENTO** | **TANDEM**	506
CABLOXX	594
Accessories	452
Attachment of runners	460
Blum services	602
More technical details	708

Assembly, removal and adjustment

Short URL
www.blum.com/a420

TANDEM single extension with BLUMOTION – 551H

Web code – click on the code or enter it in the Product Configurator: DQD65A



- Runner for wooden drawers with a panel thickness of **11–16 mm**
- Concealed **TANDEM** single extension with soft end stop when opening and integrated **BLUMOTION** soft-close mechanism for soft and effortless closing
- Suitable for use with **SERVO-DRIVE** – the electrical opening support system
- Low-friction cylindrical rollers ensure a feather-light glide
- Lift-off stop and height adjustment integrated into runner system

Space requirement

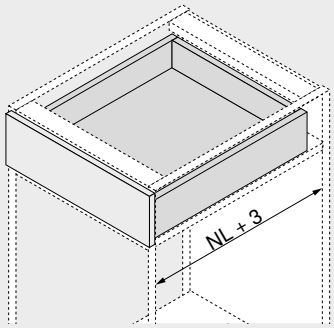

NL Nominal length

Order information

1 Runners left/right



Version	BLUMOTION	
Nominal length NL (mm)	Dynamic carrying capacity (kg)	
	30	
260	551H2601B	
285	551H2851B	
310	551H3101B	
335	551H3351B	
360	551H3601B	
385	551H3851B	
410	551H4101B	
435	551H4351B	
460	551H4601B	
485	551H4851B	
510	551H5101B	
535	551H5351B	
560	551H5601B	

Accessories

4 Front adjuster



Colour	Material		Part no.
Natural	Nylon	2 x	295.1000

12 Side stabilisation set – single extension[2]



Nominal length NL (mm)[1]	Colour	Part no.
Up to 410	RAL 7037 dust grey	ZST.410TT
Up to 650		ZST.650TT

[1] For cutting to size
[2] Suitable for cabinet width KB 1400 mm
We recommend using a side stabiliser with wide pull-outs with a short nominal length

Drawer

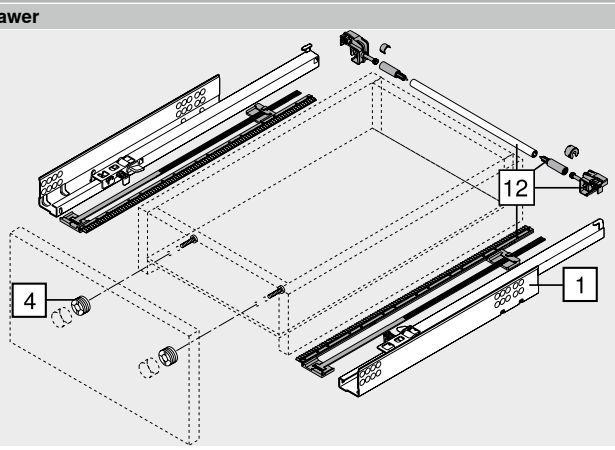

Inner drawer

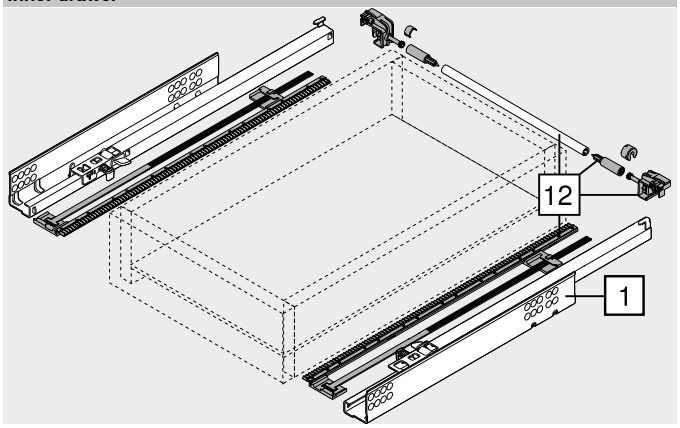

TANDEM single extension with BLUMOTION – 551H

Web code – click on the code or enter it in the Product Configurator DQD65A

Planning

Space requirement in cabinet

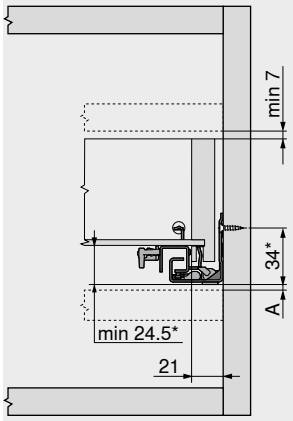

A	3 mm distance to interchange with full extension
*	+3 mm with side stabilisation

Drawer | inner drawer

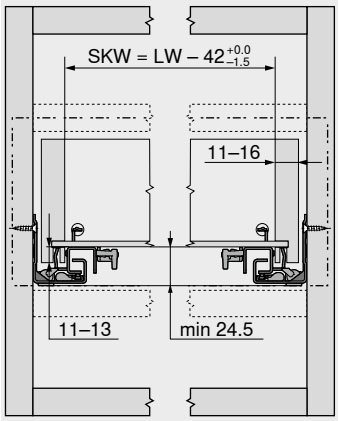

SKW	Internal drawer width
LW	Internal cabinet width

Drawer

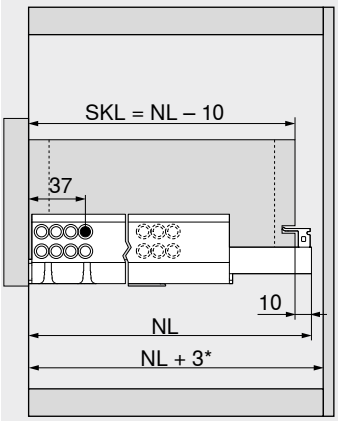

SKL	Drawer length
NL	Nominal length
*	Additional +12 mm with side stabilisation

Inner drawer

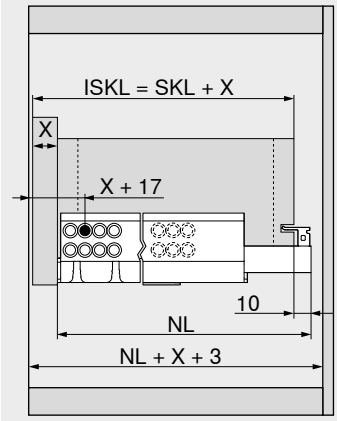

ISKL	Inner drawer length
SKL	Drawer length
NL	Nominal length
X	Front thickness

Drawer assembly

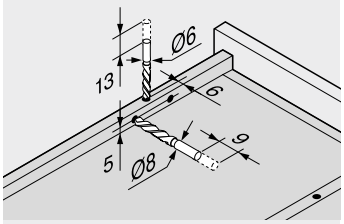

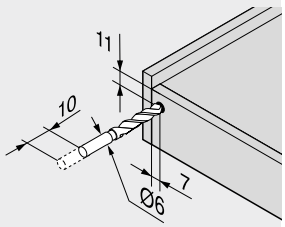

Use drilling template T65.1000.02

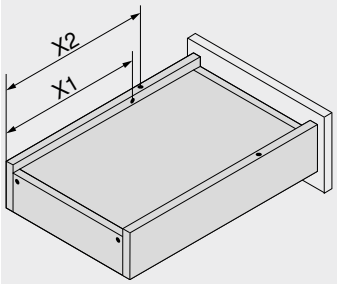

Nominal length	Pegs	Lift-off stop
NL (mm)	X2 (mm)	X1 (mm)
260	205	185
285	220	200
310	230	210
335	245	225
360	275	255
385	285	265
410	300	280
435	310	290
460	335	315
485	350	330
510	360	340
535	375	355
560	405	385

Reference pages

Overview	431
SERVO-DRIVE for **MOVENTO** | **TANDEM**	462
TIP-ON for **MOVENTO** | **TANDEM**	506
CABLOXX	594
Accessories	452
Attachment of runners	460
Blum services	602
More technical details	708

Assembly, removal and adjustment

Short URL
www.blum.com/a420

TANDEM full extension with BLUMOTION – 560F

Web code – click on the code or enter it in the Product Configurator: DQHL6M



- Runner for wooden drawers with a panel thickness of **17–19 mm**
- Concealed **TANDEM** full extension with integrated **BLUMOTION** soft-close mechanism for soft and effortless closing action
- Suitable for use with **SERVO-DRIVE** – the electrical opening support system
- Low-friction cylindrical rollers ensure a feather-light glide
- Tool-free height adjustment via a locking device
- Tool-free integrated front tilt adjustment
- Built-in width and depth tolerance compensation

Space requirement

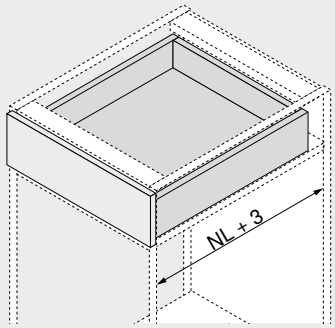

NL Nominal length

Order information

1 Runners left/right



Version	BLUMOTION		
Nominal length NL (mm)	Dynamic carrying capacity (kg) 30		
250	☎ 560F2500B		
270	☎ 560F2700B		
300	☎ 560F3000B		
350	☎ 560F3500B		
400	☎ 560F4000B		
450	☎ 560F4500B		
500	☎ 560F5000B		
550	☎ 560F5500B		
600	☎ 560F6000B		

3 Locking device



Colour	Material		Part no.
Orange	Nylon/zinc	[1]	T51.1700.04

[1] Order left/right

Accessories

4 Front adjuster



Colour	Material		Part no.
Natural	Nylon	2 x	295.1000

5 POSISTOP[1]



Colour	Material		Part no.
RAL 7037 dust grey	Nylon	2 x	298.5500

[1] Depth stop

Drawer

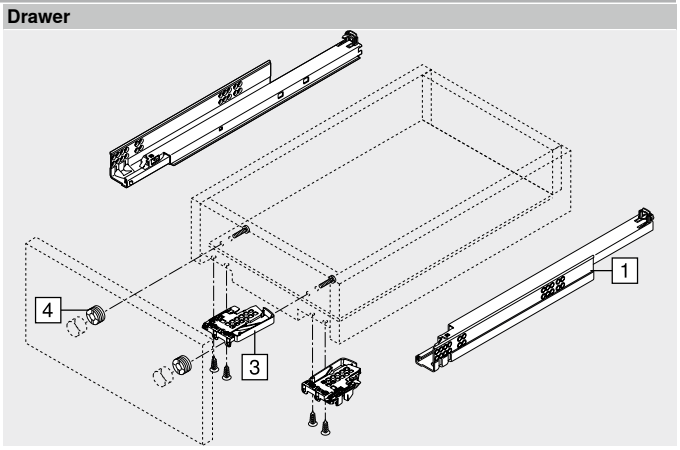

Inner drawer

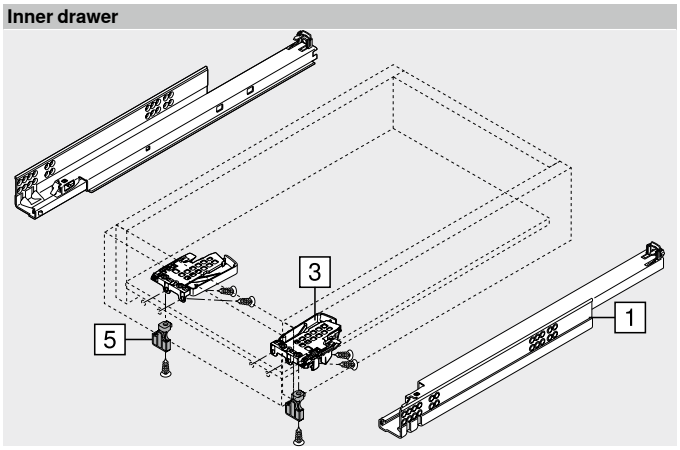

TANDEM full extension with BLUMOTION – 560F

Web code – click on the code or enter it in the Product Configurator: DQHL6M

Planning

Space requirement in cabinet

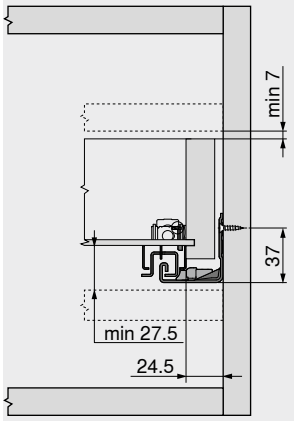

Drawer | inner drawer

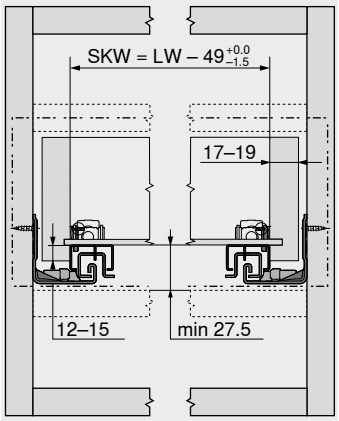

SKW	Internal drawer width
LW	Internal cabinet width

Drawer

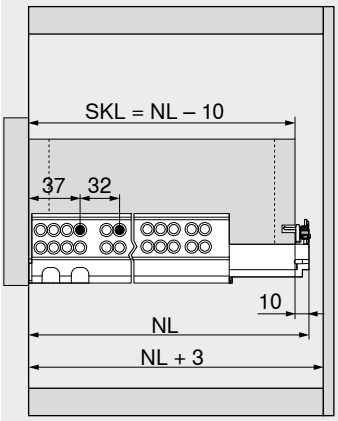

SKL	Drawer length
NL	Nominal length

Inner drawer

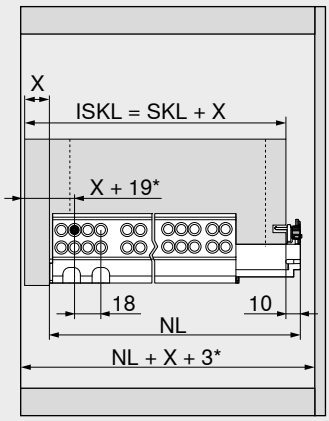

ISKL	Inner drawer length
SKL	Drawer length
NL	Nominal length
X	Front thickness
*	Additional +2 mm with **POSISTOP**

Drawer assembly

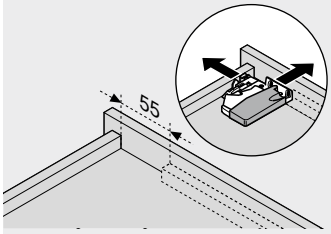

Use drilling template T65.1000.02

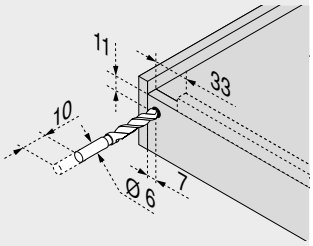

Use drilling template T65.1000.02

Reference pages

Overview	431	**TANDEM 19 mm**	
SERVO-DRIVE for **MOVENTO** | **TANDEM**	462		
TIP-ON for **MOVENTO** | **TANDEM**	506	Short URL	
CABLOXX	594	www.blum.com/i011	**Assembly, removal and adjustment**
Accessories	452		
Attachment of runners	461		
Blum services	602	Short URL	
More technical details	708	www.blum.com/a420	

TANDEM single extension with BLUMOTION – 550F

Web code – click on the code or enter it in the Product Configurator: DQHMLA



- Runner for wooden drawers with a panel thickness of **17–19 mm**
- Concealed **TANDEM** single extension with soft end stop when opening and integrated **BLUMOTION** soft-close mechanism for soft and effortless closing
- Suitable for use with **SERVO-DRIVE** – the electrical opening support system
- Low-friction cylindrical rollers ensure a feather-light glide
- Tool-free height adjustment via a locking device
- Built-in width and depth tolerance compensation

Space requirement

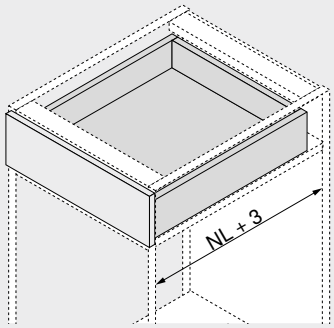

NL Nominal length

Order information

1 Runners left/right



Version	BLUMOTION	
Nominal length NL (mm)	Dynamic carrying capacity (kg) 30	
270	☎ 550F2700B	
300	☎ 550F3000B	
350	☎ 550F3500B	
400	☎ 550F4000B	
450	☎ 550F4500B	
500	☎ 550F5000B	
550	☎ 550F5500B	
600	☎ 550F6000B	
650	☎ 550F6500B	

3 Locking device



Colour	Material	Part no.
Orange	Nylon/zinc [1]	T51.1700.04

[1] Order left/right

Accessories

4 Front adjuster



Colour	Material	Part no.
Natural	Nylon 2 x	295.1000

5 POSISTOP[1]



Colour	Material	Part no.
RAL 7037 dust grey	Nylon 2 x	298.5500

[1] Depth stop

Drawer

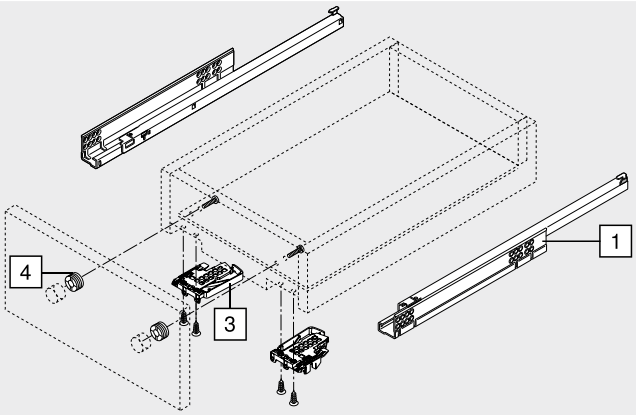

Inner drawer

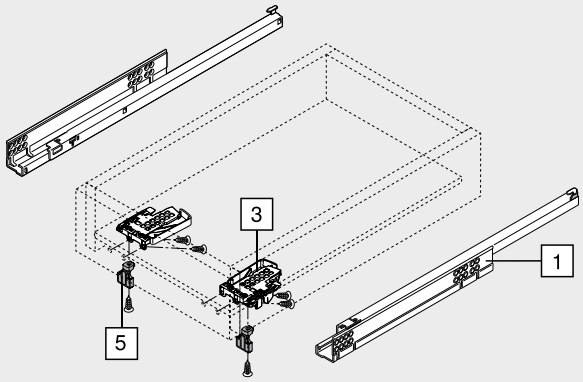

TANDEM single extension with BLUMOTION – 550F

Web code – click on the code or enter it in the Product Configurator: DQHMLA

Planning

Space requirement in cabinet

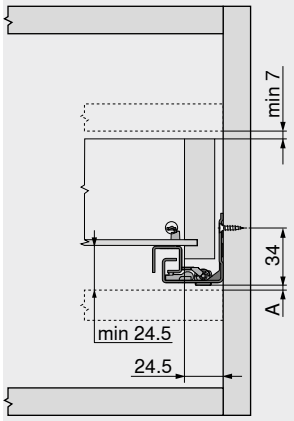

A	3 mm distance to interchange with full extension

Drawer | inner drawer

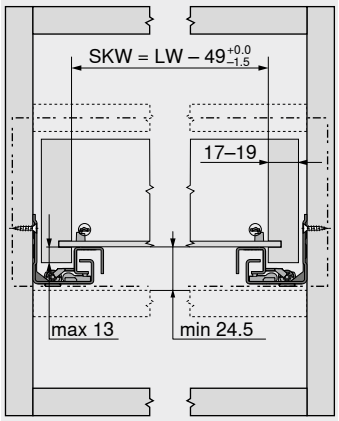

SKW	Internal drawer width
LW	Internal cabinet width

Drawer

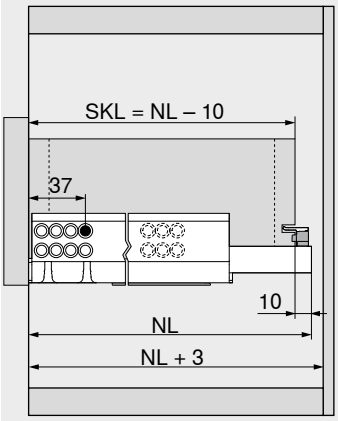

SKL	Drawer length
NL	Nominal length

Inner drawer

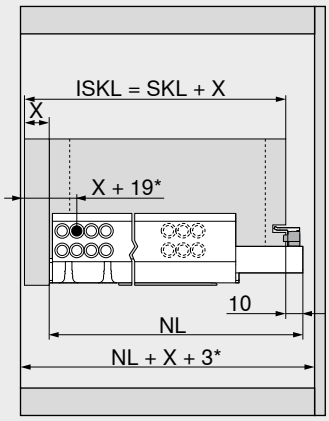

ISKL	Inner drawer length
SKL	Drawer length
NL	Nominal length
X	Front thickness
*	Additional +2 mm with **POSISTOP**

Drawer assembly

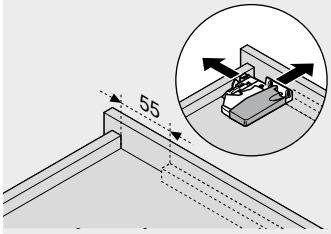

Use drilling template T65.1000.02

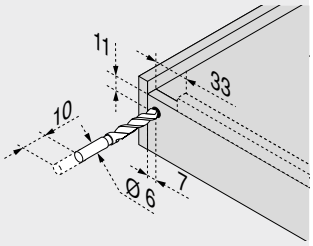

Use drilling template T65.1000.02

Reference pages

Overview	431	**TANDEM 19 mm**	
SERVO-DRIVE for **MOVENTO** | **TANDEM**	462		
TIP-ON for **MOVENTO** | **TANDEM**	506	Short URL	
CABLOXX	594	www.blum.com/i011	**Assembly, removal and adjustment**
Accessories	452		
Attachment of runners	461		
Blum services	602	Short URL	
More technical details	708	www.blum.com/a420	

TANDEM full extension with BLUMOTION – 561F

Web code – click on the code or enter it in the Product Configurator: DQHNZY



- Runner for wooden drawers with a panel thickness of **17–19 mm**
- Concealed **TANDEM** full extension with integrated **BLUMOTION** soft-close mechanism for soft and effortless closing action
- Suitable for use with **SERVO-DRIVE** – the electrical opening support system
- Low-friction cylindrical rollers ensure a feather-light glide
- Lift-off stop and height adjustment integrated into runner system
- Tool-free integrated front tilt adjustment

Space requirement

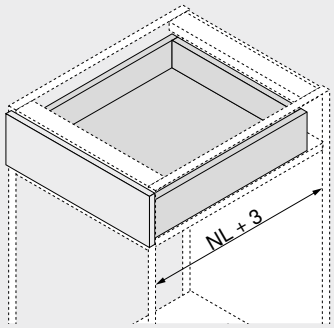

NL Nominal length

Order information

1 Runners left/right

Version	BLUMOTION		
Nominal length	Dynamic carrying capacity (kg)		
NL (mm)	30		
260	561F2601B		
310	561F3101B		
360	561F3601B		
410	561F4101B		
460	561F4601B		
510	561F5101B		
560	561F5601B		

Accessories

4 Front adjuster

Colour	Material		Part no.
Natural	Nylon	2 x	295.1000

Drawer

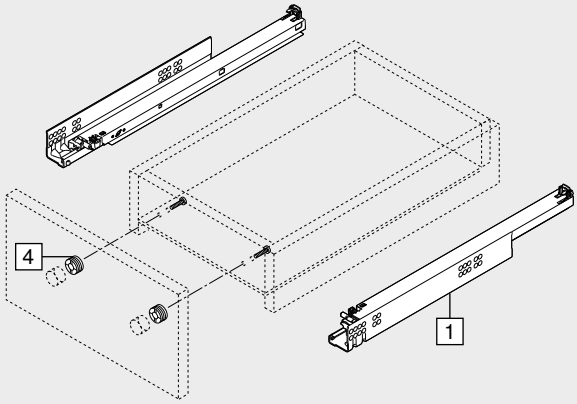

Inner drawer

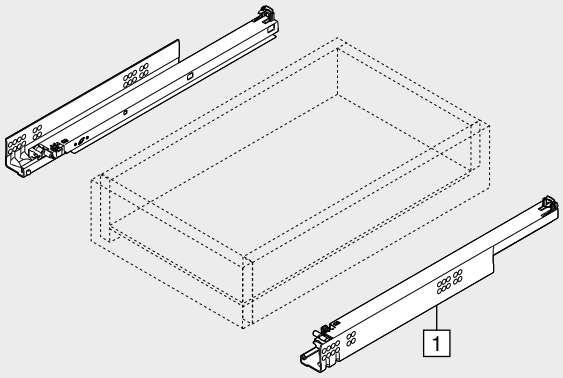

TANDEM full extension with BLUMOTION – 561F

Web code – click on the code or enter it in the Product Configurator: DQHNZY

Planning

Space requirement in cabinet

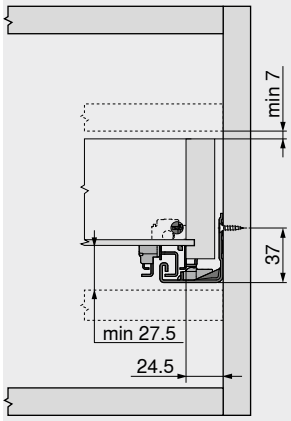

Drawer | inner drawer

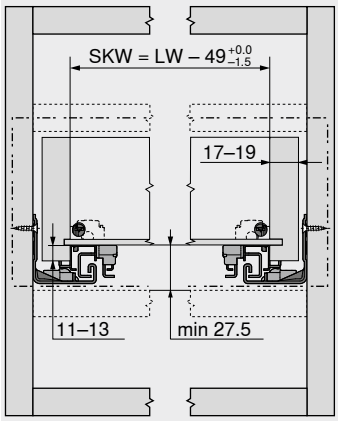

SKW	Internal drawer width
LW	Internal cabinet width

Drawer

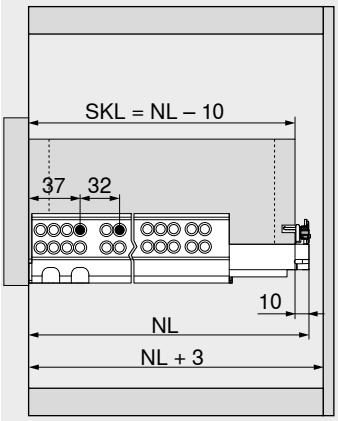

SKL	Drawer length
NL	Nominal length

Inner drawer

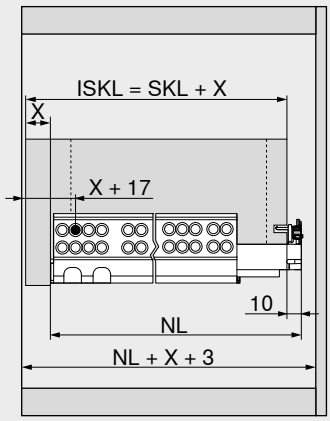

ISKL	Inner drawer length
SKL	Drawer length
NL	Nominal length
X	Front thickness

Drawer assembly

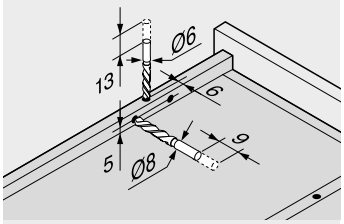

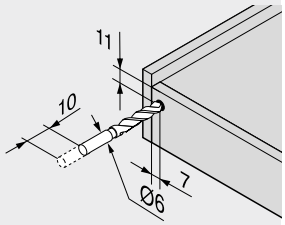

Use drilling template T65.1000.02

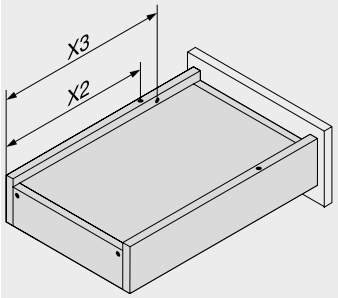

Nominal length	Pegs	Lift-off stop
NL (mm)	X2 (mm)	X3 (mm)
260	205	185
310	230	242
360	275	287
410	300	344
460	335	379
510	360	436
560	405	481

Reference pages

Overview	431	**TANDEM 19 mm**	
SERVO-DRIVE for **MOVENTO** | **TANDEM**	462		
TIP-ON for **MOVENTO** | **TANDEM**	506	Short URL	
CABLOXX	594	www.blum.com/i011	**Assembly, removal and adjustment**
Accessories	452		
Attachment of runners	461		
Blum services	602	Short URL	
More technical details	708	www.blum.com/a420	

TANDEM single extension with BLUMOTION – 551F

Web code – click on the code or enter it in the Product Configurator: DQHPEM



- Runner for wooden drawers with a panel thickness of **17–19 mm**
- Concealed **TANDEM** single extension with soft end stop when opening and integrated **BLUMOTION** soft-close mechanism for soft and effortless closing
- Suitable for use with **SERVO-DRIVE** – the electrical opening support system
- Low-friction cylindrical rollers ensure a feather-light glide
- Lift-off stop and height adjustment integrated into runner system

Space requirement

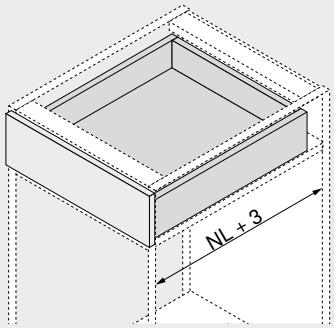

NL Nominal length

Order information

1 **Runners left/right**



Version	BLUMOTION		
Nominal length	**Dynamic carrying capacity (kg)**		
NL (mm)	**30**		
260	☎ 551F2601B		
310	☎ 551F3101B		
360	☎ 551F3601B		
410	☎ 551F4101B		
460	☎ 551F4601B		
510	☎ 551F5101B		
560	☎ 551F5601B		

Accessories

4 **Front adjuster**



Colour	Material		Part no.
Natural	Nylon	2 x	295.1000

Drawer

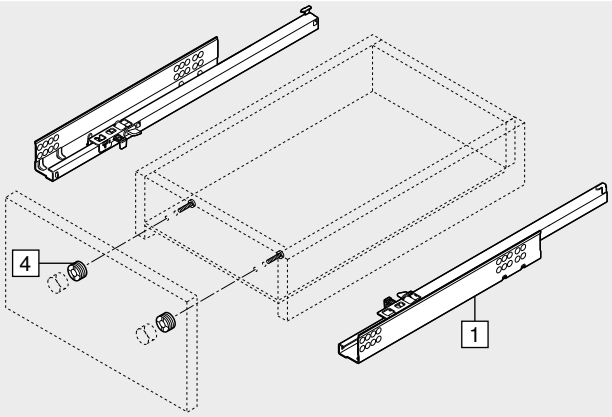

Inner drawer

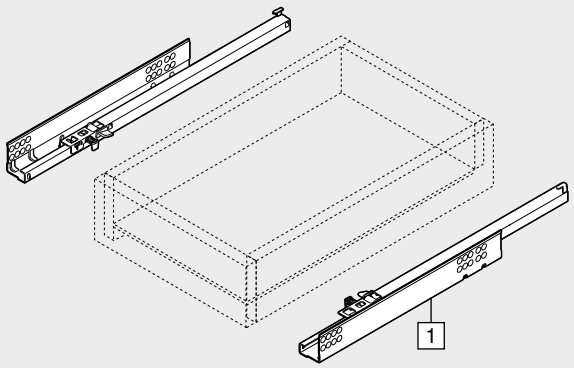

TANDEM single extension with BLUMOTION – 551F

Web code – click on the code or enter it in the Product Configurator: DQHPEM

Planning

Space requirement in cabinet

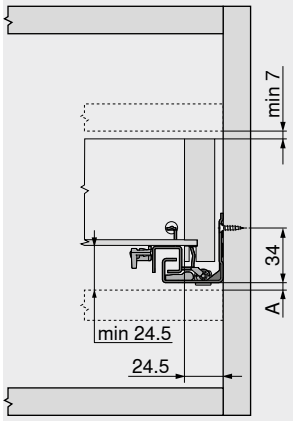

A	3 mm distance to interchange with full extension

Drawer | inner drawer

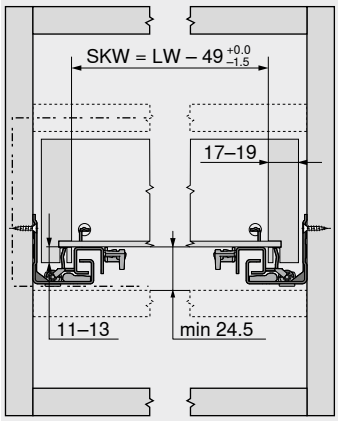

SKW	Internal drawer width
LW	Internal cabinet width

Drawer

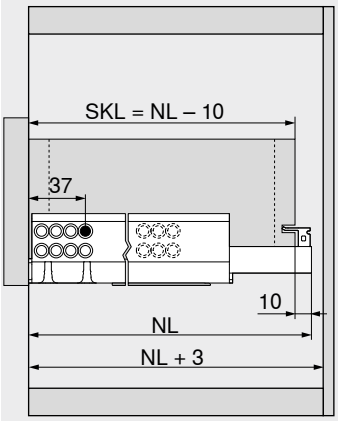

SKL	Drawer length
NL	Nominal length

Inner drawer

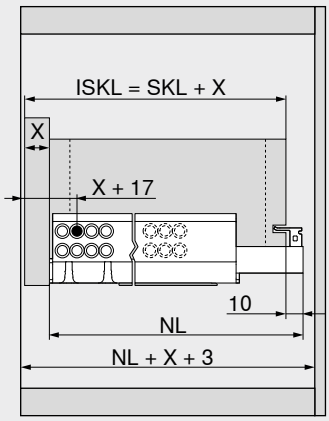

ISKL	Inner drawer length
SKL	Drawer length
NL	Nominal length
X	Front thickness

Drawer assembly

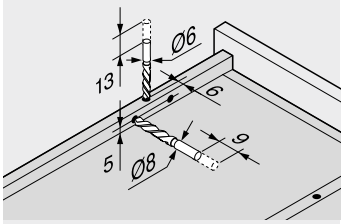

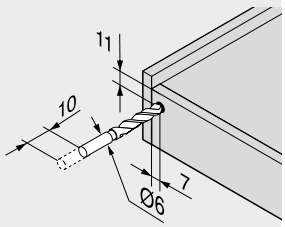

Use drilling template T65.1000.02

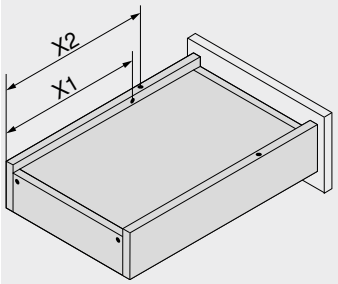

Nominal length	Pegs	Lift-off stop
NL (mm)	X2 (mm)	X1 (mm)
260	205	185
310	230	210
360	275	255
410	300	280
460	335	315
510	360	340
560	405	385

Reference pages

Overview	431	**TANDEM 19 mm**	
SERVO-DRIVE for **MOVENTO** | **TANDEM**	462		
TIP-ON for **MOVENTO** | **TANDEM**	506	Short URL	
CABLOXX	594	www.blum.com/i011	**Assembly, removal and adjustment**
Accessories	452		
Attachment of runners	461		
Blum services	602	Short URL	
More technical details	708	www.blum.com/a420	

SPACE TOWER



- The flexible larder unit with inner pull-outs; with shelves and inner drawers in the upper area
- Easy access from three sides
- Individually opening pull-outs allow for a complete overview and convenient removal from above
- Light operating forces even with heavily-laden pull-outs
- High backs and side panels guarantee secure stocking
- Flexible cabinet dimensions possible



Order information

Application recommendation	Page
TANDEM full extension with **BLUMOTION** – 560H	434
TANDEM single extension with **BLUMOTION** – 550H	436
TANDEM full extension with **BLUMOTION** – 561H	438
TANDEM single extension with **BLUMOTION** – 551H	440
TANDEM full extension with **BLUMOTION** – 560F	442
TANDEM single extension with **BLUMOTION** – 550F	444
TANDEM full extension with **BLUMOTION** – 561F	446
TANDEM single extension with **BLUMOTION** – 551F	448
CLIP top BLUMOTION 155° hinge	84

Recommendation
Cabinet width KB (mm)
275–1200

Planning

Help with planning and ordering

Short URL
www.blum.com/planningtools

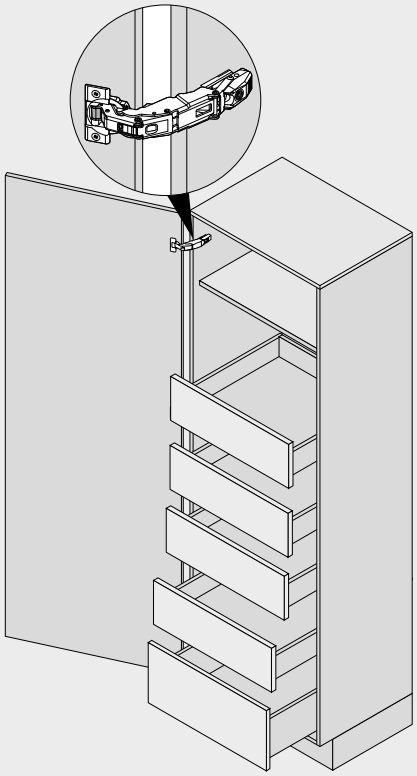

Reference pages

Overview	431	More technical details	708	**Assembly, removal and adjustment**	
SERVO-DRIVE for **MOVENTO** | **TANDEM**	462				
CLIP top BLUMOTION 155° hinge	84			**Short URL**	
BLUMOTION for doors	176			**www.blum.com/a420**	
Accessories	452				
Blum services	602				

SPACE TOWER

Planning

Recommendation

Positioning in the cabinet

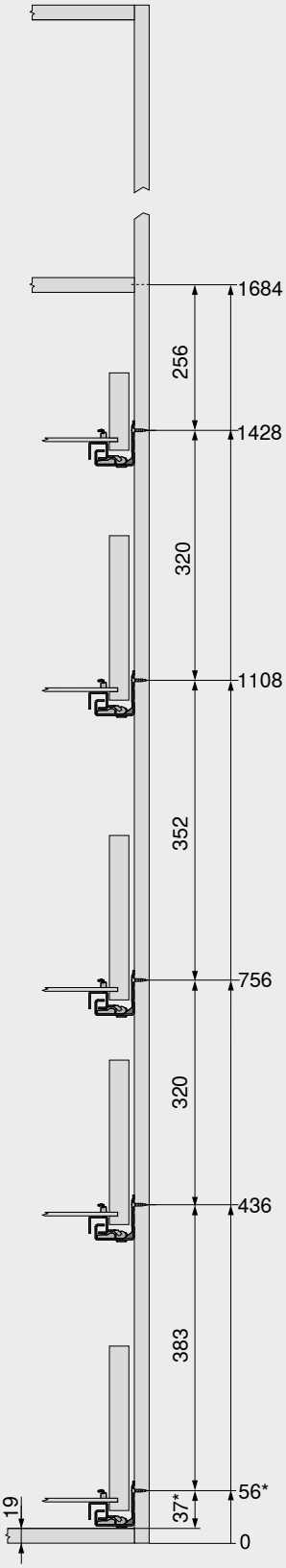

Drilling distances – front

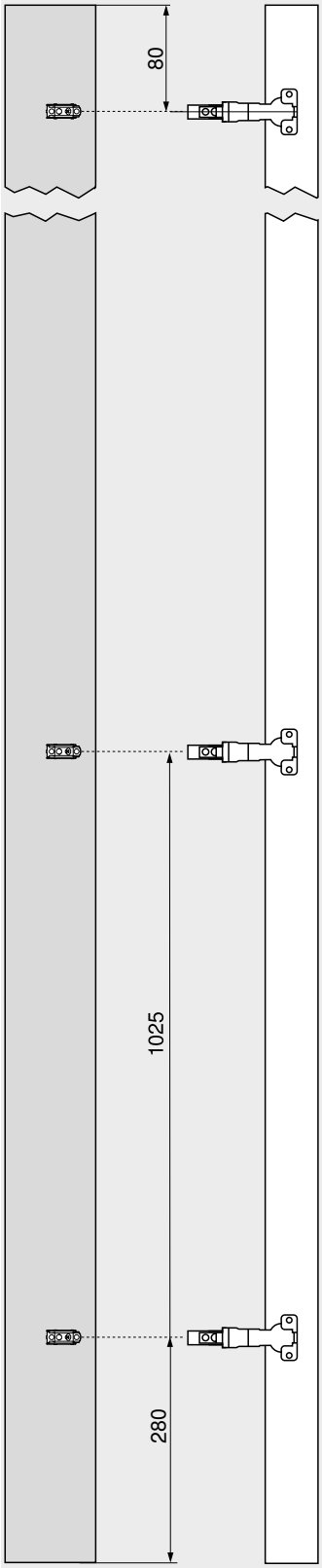

Drilling distances – front

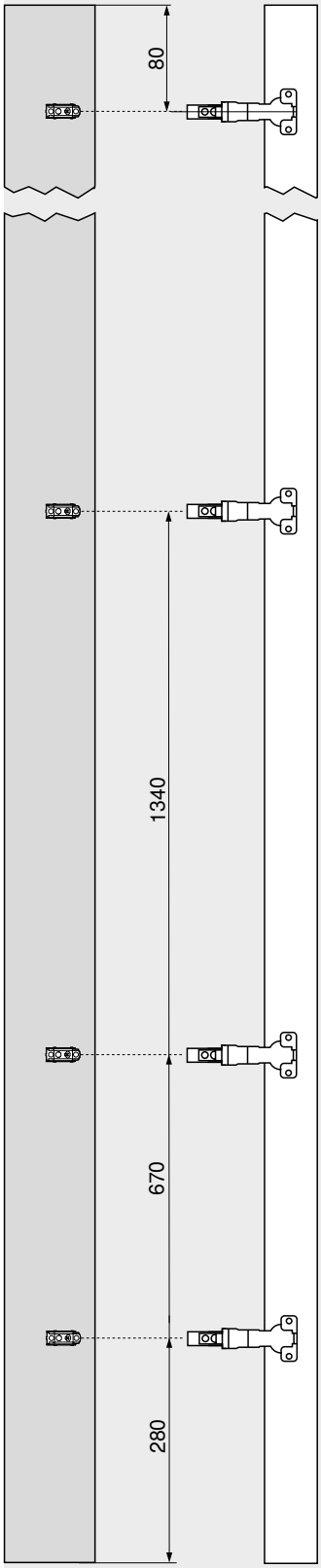

In high cabinets, it is practical to have a shelf at the highest level rather than an inner drawer.

The inner drawer allows access from the side. If the inner drawer is implemented with a higher back, stored goods are prevented from falling down the back.

The option to position the pull-outs at different heights within the cabinet guarantees that no items will be too tall to be stored inside.

The **CLIP top BLUMOTION** 155° hinge without front protrusion allows the cabinet width KB to be put to optimal use.

If the hinge is mounted above the pull-out, the lowest pull-out can be inserted right at the bottom. Turning even those last few centimetres into usable storage space.

* +1 mm if cabinet profile is installed before the cabinet is assembled

Reference pages

Number of hinges 718

Pull-out shelf lock



- Can be used with **TANDEM full extensions**
- Cannot be used with **TANDEM single extensions**
- Can be combined with **BLUMOTION** and **TIP-ON**
- Two-sided locking mechanism
- Secure hold
- Pull-out shelf lock can be released with one hand thanks to synchronisation shaft
- Easy assembly – fittings serve as template
- Runners are attached to standard fixing positions
- Max. cabinet width 1200 mm

Space requirement

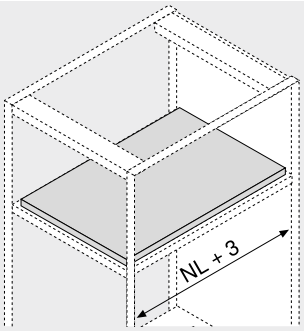

NL Nominal length

Order information

12 Pull-out shelf lock[1]



Runners	Colour	Part no.
560H | 561H	Orion grey matt	295H5700
560F | 561F		295F5700

Consisting of:

12a	2 x	Locking mechanism unit Fixing only possible with chipboard screws
12b	2 x	Latching element Fixing possible with chipboard and system screws
–	1 x	Installation instructions

[1] During assembly of the pull-out shelf lock, make sure that you leave the tilt adjustment at the factory setting!
We recommend using a side stabiliser with wide pull-outs with a short nominal length. This improves the engagement of the locking unit in combination with 560H | 561H.

12c Synchronisation linkage[2]

Version	Length (mm)[1]	Part no.
Round	1089	ZST.1089W
	1160	ZST.1160W

Cutting

12c	560H | 561H: Internal cabinet width LW – 87 mm ±1 mm
12c	560F | 561F: Internal cabinet width LW – 94 mm ±1 mm

[1] For cutting to size
[2] Pull-out shelf lock can be released with one hand thanks to synchronisation shaft

Accessories

– Chipboard screws



Diameter (mm)	Length (mm)	Part no.
Ø 3.5	15.0	609.1500

– System screw



Diameter (mm)	Length (mm)	Part no.
Ø 6.0	14.5	661.1450.HG

Locking device feature – 560H | 560F

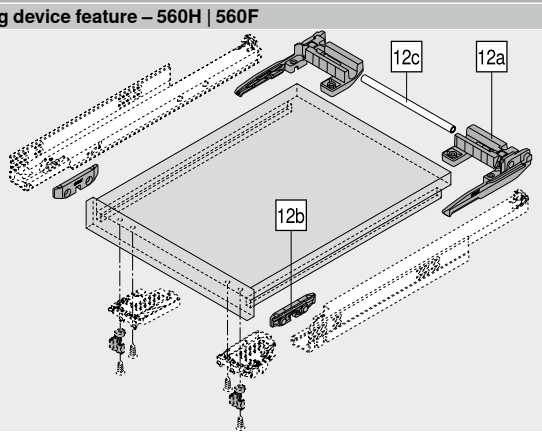

Hook and peg variant – 561H | 561F

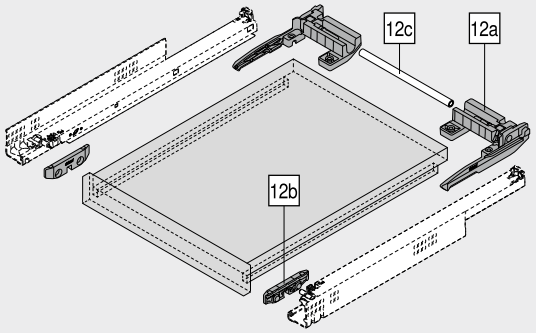

Planning

Pull-out shelf assembly

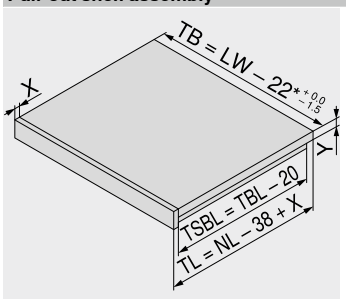

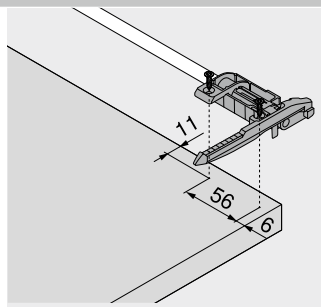

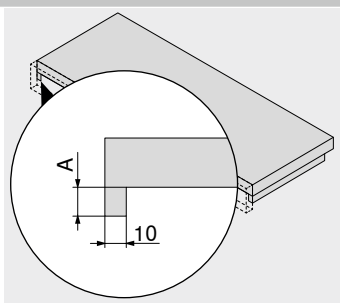

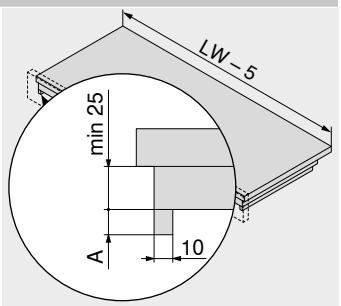

NL	Nominal length
LW	Internal cabinet width
TB	Shelf width
TL	Shelf length
TBL	Pull-out shelf base length
TSBL	Pull-out shelf side panel length
X	Pull-out shelf front piece thickness
Y	Pull-out shelf base thickness
*	29 mm with **TANDEM 19 mm**

Single pull-out shelf base

Runners	A (mm)
560H | 560F	12–15
561H | 561F	11–13

Double pull-out shelf base

Runners	A (mm)
560H | 560F	12–15
561H | 561F	11–13

Pull-out shelf lock

Planning

TANDEM – 560H

Space requirement in cabinet

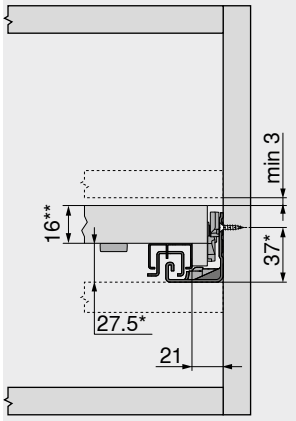

* +3 mm with side stabiliser or +1 mm with **TIP-ON**
** Min. 25 mm when installed in compartment

Pull-out shelf

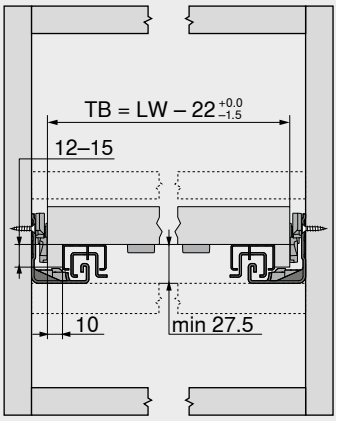

TB Shelf width
LW Internal cabinet width

Pull-out shelf

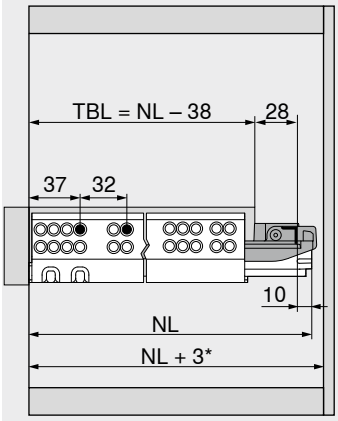

TBL Pull-out shelf base length
NL Nominal length
* Additional +12 mm with side stabilisation

Inset pull-out shelf

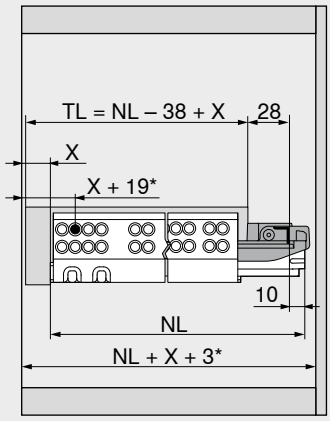

TL Shelf length
NL Nominal length
X Pull-out shelf front piece thickness
* Additional +2 mm with **POSISTOP** or additional +4 mm with **TIP-ON**

TANDEM – 561H

Space requirement in cabinet

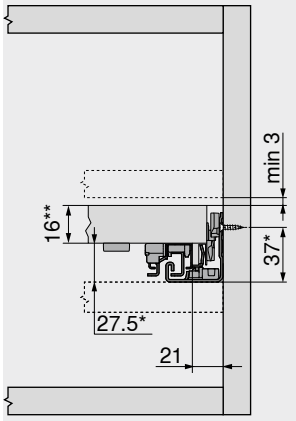

* +3 mm with side stabiliser or +1 mm with **TIP-ON**
** Min. 25 mm when installed in compartment

Pull-out shelf

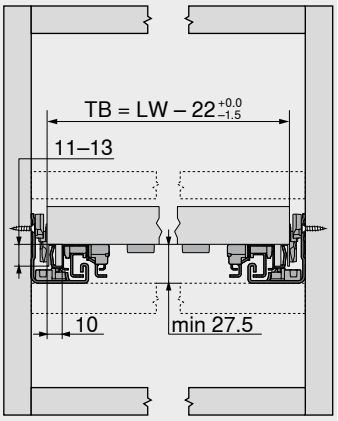

TB Shelf width
LW Internal cabinet width

Pull-out shelf

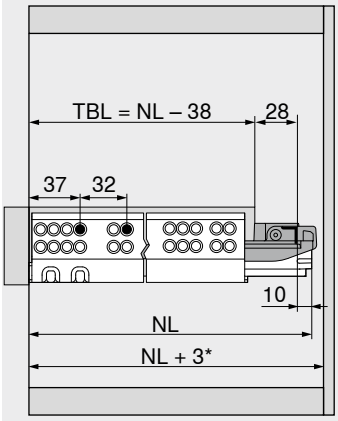

TBL Pull-out shelf base length
NL Nominal length
* Additional +12 mm with side stabilisation

Inset pull-out shelf

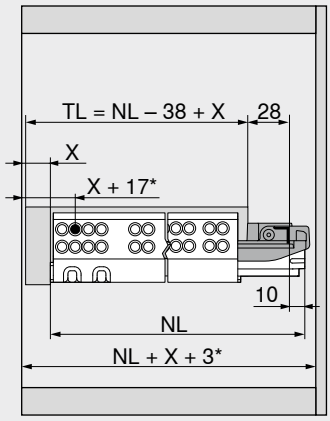

TL Shelf length
NL Nominal length
X Pull-out shelf front piece thickness
* Additional +4 mm with **TIP-ON**

Reference pages

Overview	431
TIP-ON for **MOVENTO** | **TANDEM**	506
Attachment of runners	460
Blum services	602
More technical details	708

Pull-out shelf lock

Short URL
www.blum.com/i010

Assembly, removal and adjustment

Short URL
www.blum.com/a420

Pull-out shelf lock

Planning

TANDEM – 560F

Space requirement in cabinet

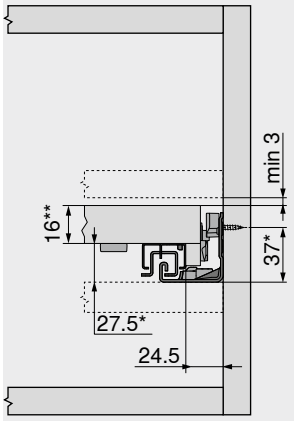

* +1 mm with **TIP-ON**
** Min. 25 mm when installed in compartment

Pull-out shelf

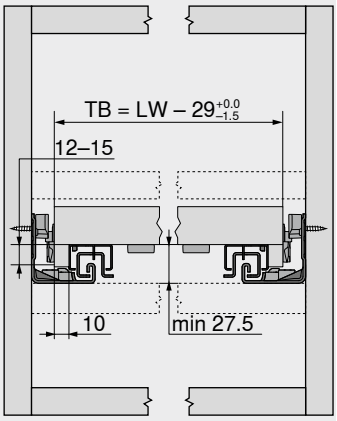

TB Shelf width
LW Internal cabinet width

Pull-out shelf

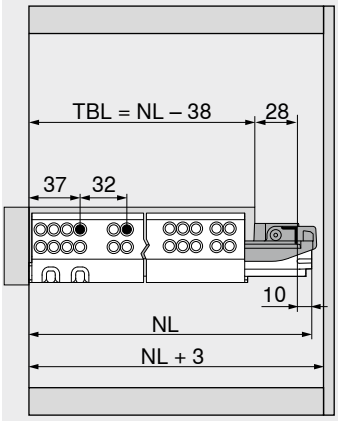

TBL Pull-out shelf base length
NL Nominal length

Inset pull-out shelf

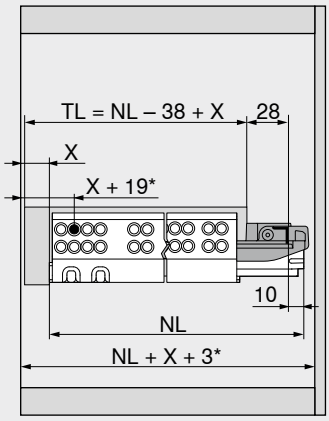

TL Shelf length
NL Nominal length
X Pull-out shelf front piece thickness
* Additional +2 mm with **POSISTOP** or additional +4 mm with **TIP-ON**

TANDEM – 561F

Space requirement in cabinet

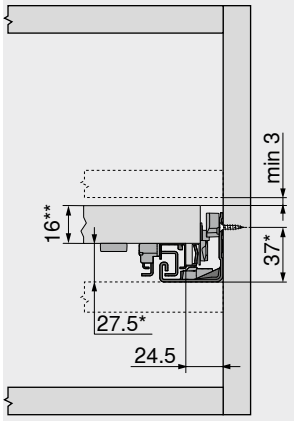

* +1 mm with **TIP-ON**
** Min. 25 mm when installed in compartment

Pull-out shelf

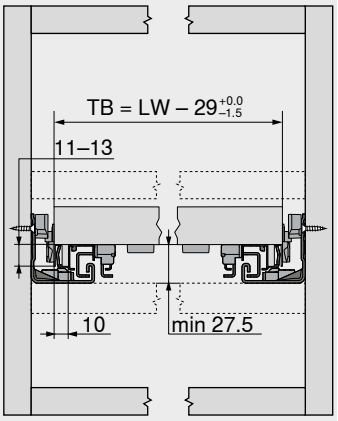

TB Shelf width
LW Internal cabinet width

Pull-out shelf

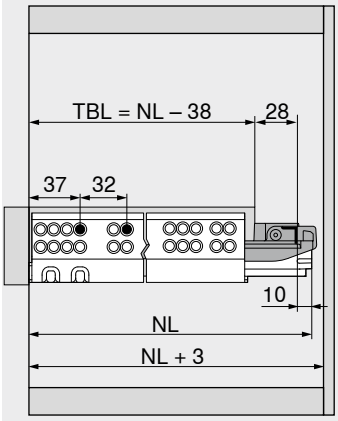

TBL Pull-out shelf base length
NL Nominal length

Inset pull-out shelf

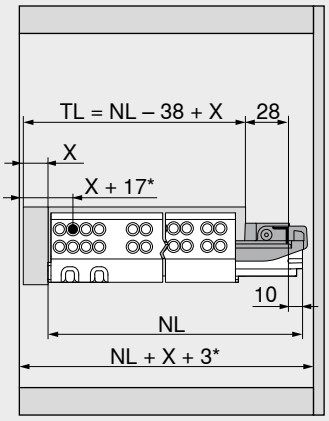

TL Shelf length
NL Nominal length
X Pull-out shelf front piece thickness
* Additional +4 mm with **TIP-ON**

Reference pages

Overview	431
TIP-ON for **MOVENTO** | **TANDEM**	506
Attachment of runners	461
Blum services	602
More technical details	708

Pull-out shelf lock

Short URL
www.blum.com/i010

Assembly, removal and adjustment

Short URL
www.blum.com/a420

Side stabilisation set – full extension

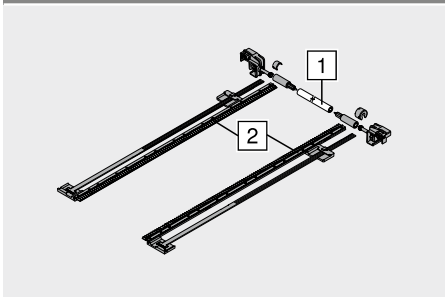

- For cutting to size
- Suitable for cabinet width KB 1400 mm
- Suitable for:
  TANDEM full extension **BLUMOTION** – 560H | 561H
- We recommend using a side stabiliser with wide pull-outs with a short nominal length
- Not compatible with **TIP-ON**
- Colour: RAL 7037 dust grey
- Material: nylon

Order information

Nominal length NL (mm)	Part no.
Up to 410	ZST.410TV
Up to 600	ZST.600TV
Up to 750	ZST.750TV

Cutting

1	Internal cabinet width LW – 254 mm
2	Nominal length NL + 12 mm

Planning

Space requirement in cabinet

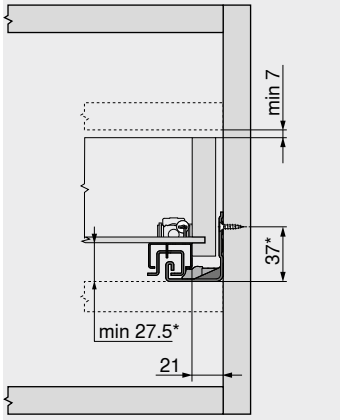

*	+3 mm with side stabilisation

Drawer

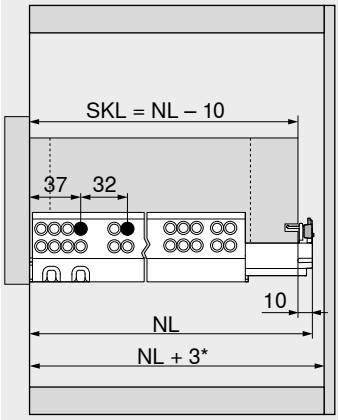

SKL	Drawer length
NL	Nominal length
*	Additional +12 mm with side stabilisation

Space requirement in cabinet

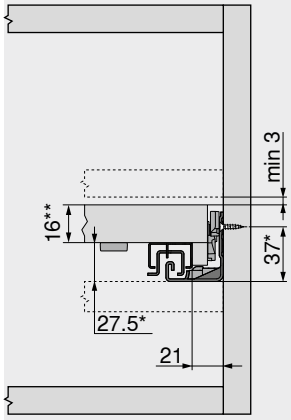

Pull-out shelf lock

*	+3 mm with side stabilisation
**	Min. 25 mm when installed in compartment

Pull-out shelf

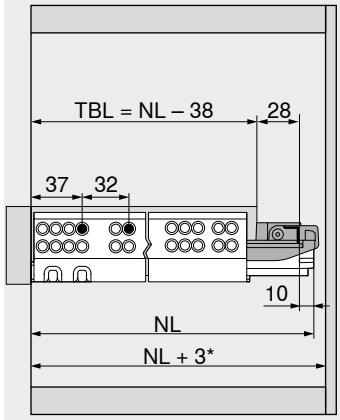

Pull-out shelf lock

TBL	Pull-out shelf base length
NL	Nominal length
*	Additional +12 mm with side stabilisation

Side stabilisation set – single extension

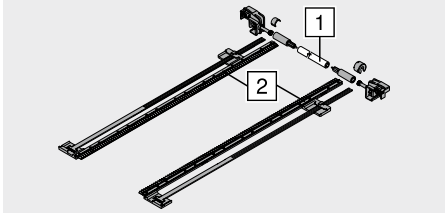

- For cutting to size
- Suitable for cabinet width KB 1400 mm
- Suitable for:
  TANDEM single extension **BLUMOTION** – 550H | 551H
- We recommend using a side stabiliser with wide pull-outs with a short nominal length
- Not compatible with **TIP-ON**
- Colour: RAL 7037 dust grey
- Material: nylon

Order information

Nominal length NL (mm)	Part no.
Up to 410	ZST.410TT
Up to 650	ZST.650TT

Cutting

1	Internal cabinet width LW – 222 mm
2	Nominal length NL + 12 mm

Planning

Space requirement in cabinet

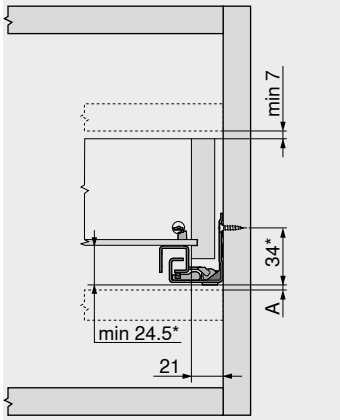

A	3 mm distance to interchange with full extension
*	+3 mm with side stabilisation

Drawer

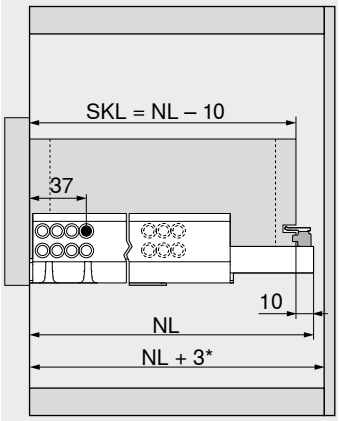

SKL	Drawer length
NL	Nominal length
*	Additional +12 mm with side stabilisation

Longside gallery rail with chipboard back fixing



- Colour: anodised stainless steel appearance
- Material: aluminium

Order information

Nominal length NL (mm)	Part no.
400	ZRE.363A.ID
450	ZRE.413A.ID
480	ZRE.443A.ID
500	ZRE.463A.ID
520	ZRE.483A.ID
550	ZRE.513A.ID
580	ZRE.543A.ID
600	ZRE.563A.ID
650	ZRE.613A.ID

Planning

Space requirement in cabinet

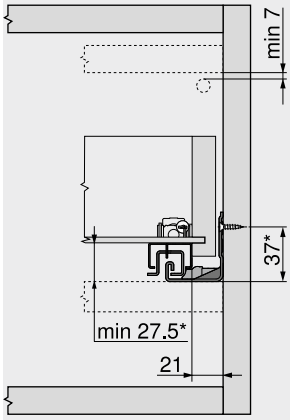

560H | 561H | 550H | 551H
* +1 mm with **TIP-ON**

Installation dimensions – back

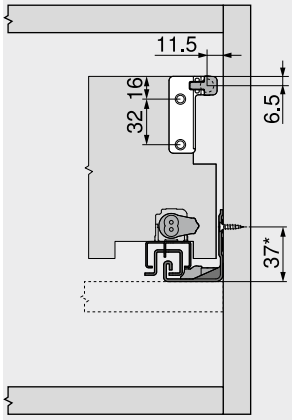

560H | 561H | 550H | 551H
* +1 mm with **TIP-ON**

Space requirement in cabinet

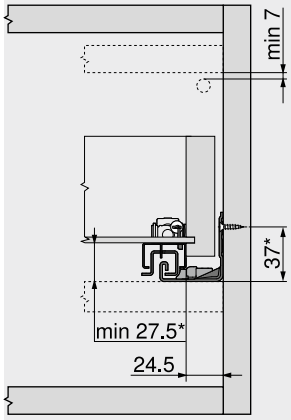

560F | 561F | 550F | 551F
* +1 mm with **TIP-ON**

Installation dimensions – back

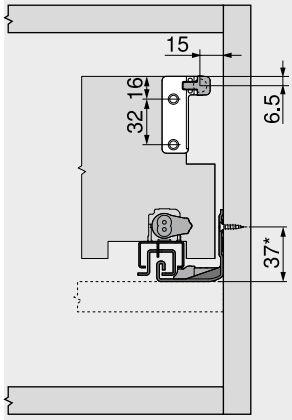

560F | 561F | 550F | 551F
* +1 mm with **TIP-ON**

Front adjuster



- With threaded steel washer insert
- For 4-sided drawers
- 2-dimensional front adjustment (±2 mm)

Order information

Colour	Material	Part no.
Natural	Nylon	295.1000

Planning

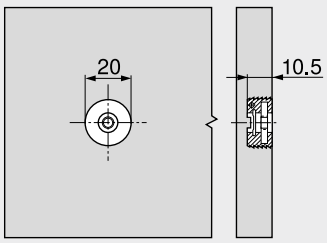

Insertion ram – MZM.0095 – **MINIPRESS**

Assembly

Assembly, removal and adjustment

Short URL
www.blum.com/a420

POSISTOP



- Suitable for:
  TANDEM full extension **BLUMOTION** – 560H | 560F
  TANDEM single extension **BLUMOTION** – 550H | 550F
- Only for inset applications

Order information

Colour	Material	Part no.
RAL 7037 dust grey	Nylon	298.5500

Assembly, removal and adjustment

Short URL
www.blum.com/a420

Chipboard screws – Ø 3.5 mm

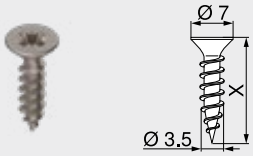

- Colour: nickel plated
- Material: steel

Order information

Length X (mm)	Diameter (mm)	Part no.
15.0	Ø 3.5	609.1500
17.0		609.1700

System screw – Ø 6.0 mm

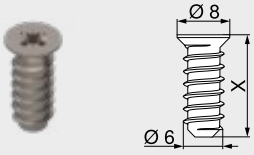

- Drilling diameter Ø 5 mm
- Colour: nickel plated
- Material: steel

Order information

Length X (mm)	Diameter (mm)	Part no.
10.0	Ø 6.0	661.1000.HG
11.5		661.1150.HG
13.0		661.1300.HG
14.5		661.1450.HG
20.0		661.2000.HG

Centre bit



- To pre-drill for Ø 3.5 mm chipboard screws
- Drilling depth up to 8 mm
- Material: steel, hardened

Order information

Description	Diameter (mm)	Part no.
Centre bit	Ø 2.7	M01.ZZ03.01
Replacement bit		M01.ZZB3

Stick-on door buffer

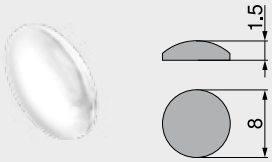

- For noise reduction
- Colour: natural coloured
- Material: nylon

Order information

Diameter (mm)	Part no.
Ø 8.0	993.710

8 mm Ø door buffer

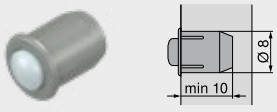

- For noise reduction
- Two-part
- Colour: RAL 9006 grey
- Material: nylon

Order information

Diameter (mm)	Part no.
Ø 8.0	993.706

Pozidrive screwdriver



- Orange handle with Blum logo
- Colour: black/orange
- Material: nylon/steel

Order information

Tool support	Total length (mm)	Part no.
Pozidriv PZ 2	210	303.756.1

Slotted screwdriver



- Orange handle with Blum logo
- Colour: black/orange
- Material: nylon/steel

Order information

Tool support	Total length (mm)	Part no.
Slotted, size 1	200	314.928.1

Runner – 560H – 30 kg

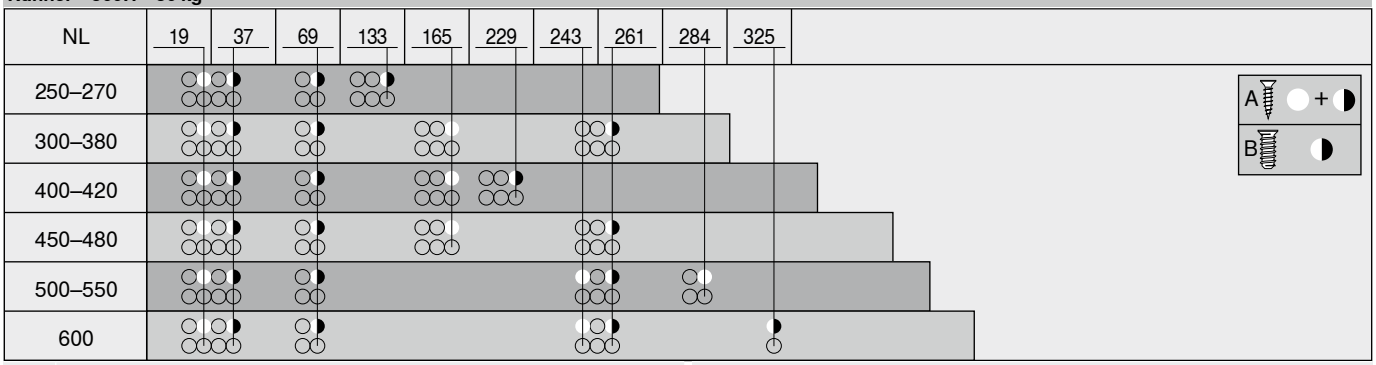

NL	Nominal length
A	Chipboard screws Ø 4 x 15 mm
B	System screws Ø 6 x 14.5 mm, part no. 661.1450.HG

Runner – 550H – 30 kg

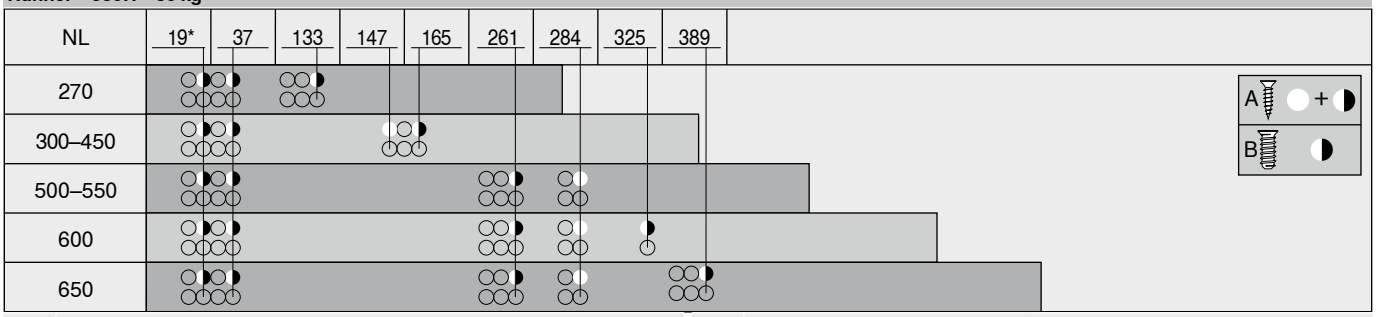

NL	Nominal length
A	Chipboard screws Ø 4 x 15 mm
B	System screws Ø 6 x 14.5 mm, part no. 661.1450.HG
*	Can be replaced with chipboard screw Ø 4 x 15 mm

Runner – 561H – 30 kg

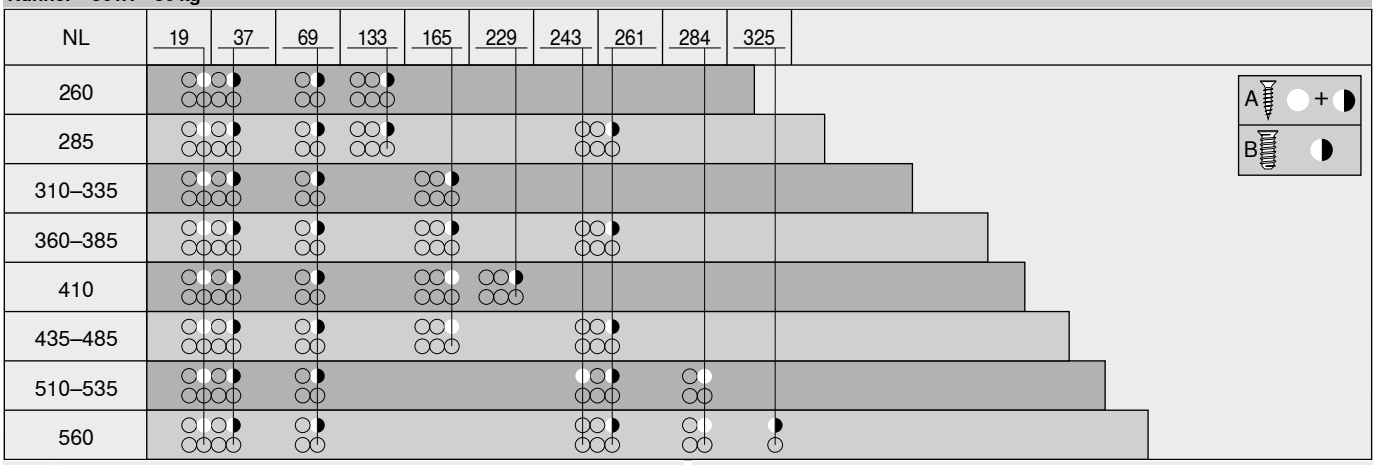

NL	Nominal length
A	Chipboard screws Ø 4 x 15 mm
B	System screws Ø 6 x 14.5 mm, part no. 661.1450.HG

Runner 551H – 30 kg

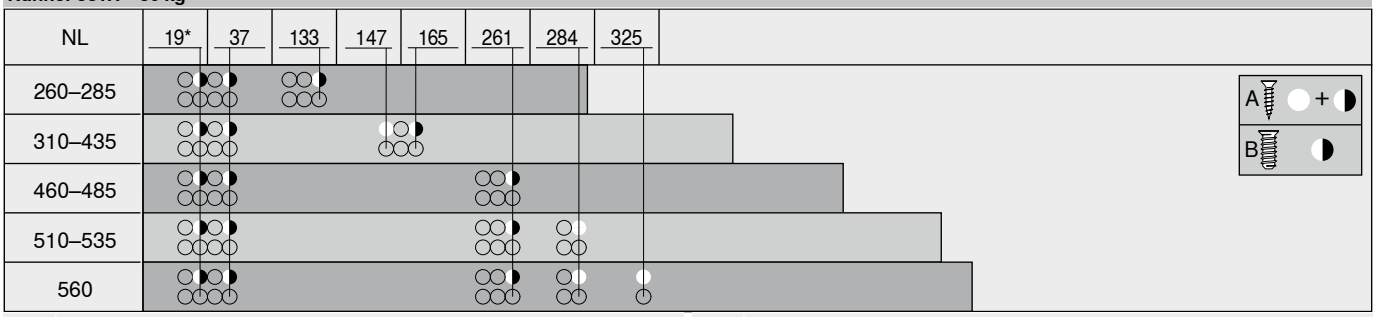

NL	Nominal length
A	Chipboard screws Ø 4 x 15 mm
B	System screws Ø 6 x 14.5 mm, part no. 661.1450.HG
*	Can be replaced with chipboard screw Ø 4 x 15 mm

Runner – 560F – 30 kg

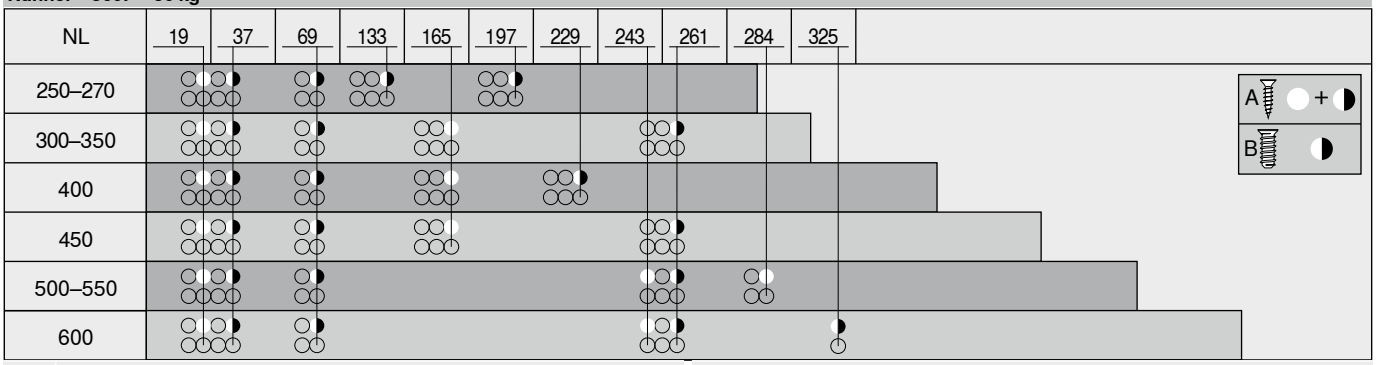

NL	Nominal length
A	Chipboard screws Ø 4 x 15 mm
B	System screws Ø 6 x 14.5 mm, part no. 661.1450.HG

Runner – 550F – 30 kg

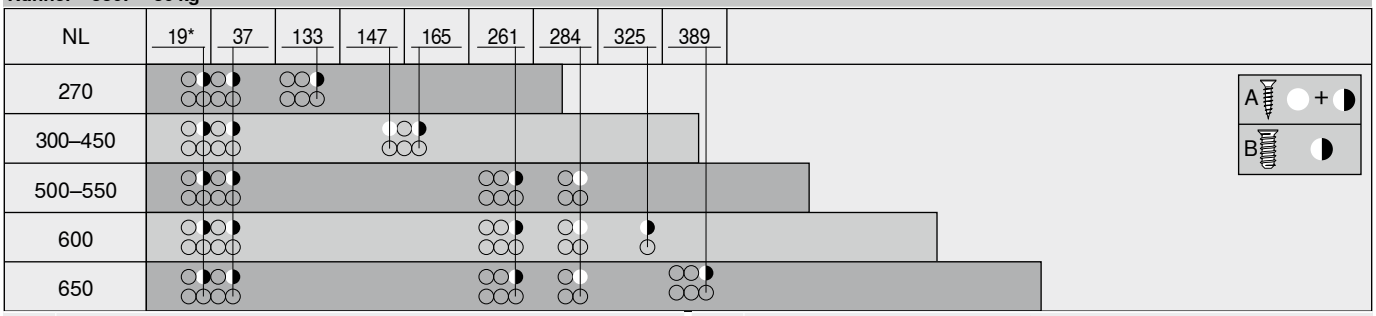

NL	Nominal length
A	Chipboard screws Ø 4 x 15 mm
B	System screws Ø 6 x 14.5 mm, part no. 661.1450.HG
*	Can be replaced with chipboard screw Ø 4 x 15 mm

Runner – 561F – 30 kg

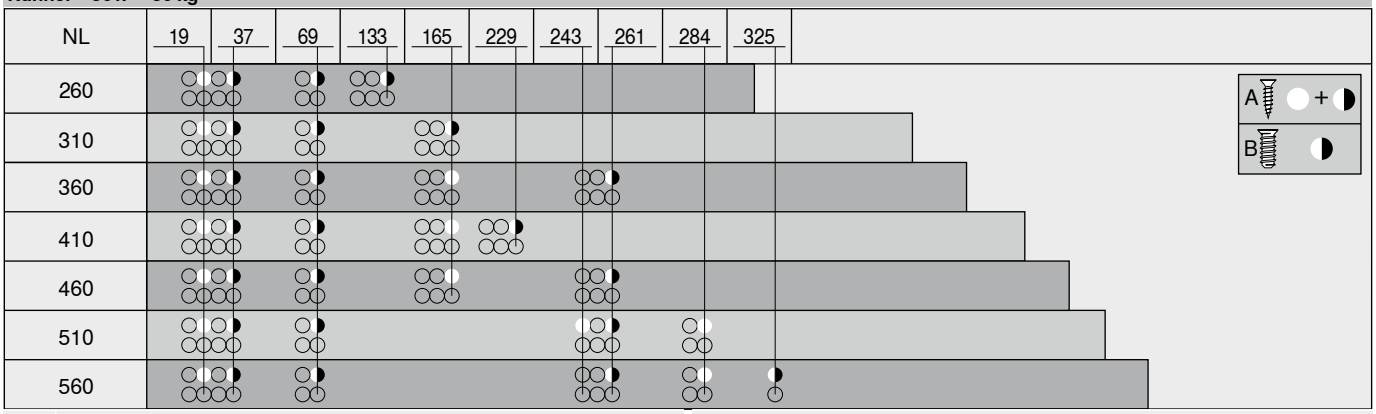

NL	Nominal length
A	Chipboard screws Ø 4 x 15 mm
B	System screws Ø 6 x 14.5 mm, part no. 661.1450.HG

Runner 551F – 30 kg

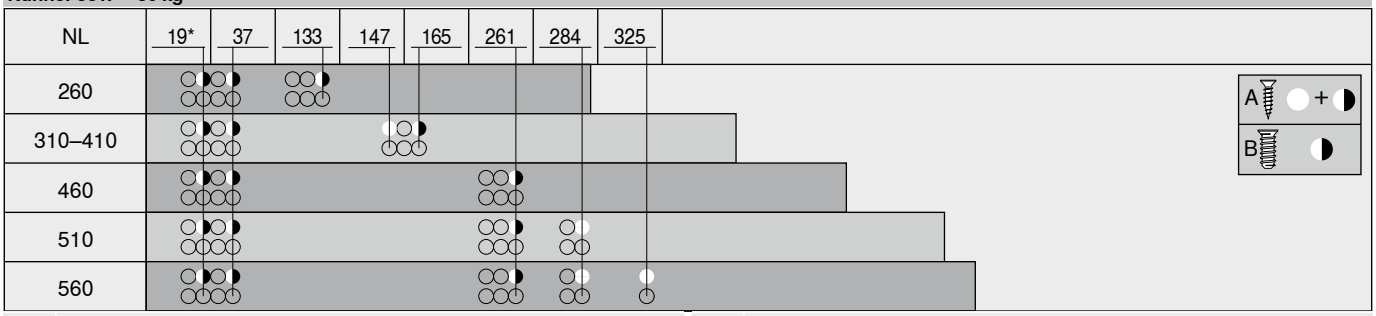

NL	Nominal length
A	Chipboard screws Ø 4 x 15 mm
B	System screws Ø 6 x 14.5 mm, part no. 661.1450.HG
*	Can be replaced with chipboard screw Ø 4 x 15 mm

Ease of opening for various furniture styles



SERVO-DRIVE, the electrical opening support system, is now also available for drawers and high fronted pull-outs made from wood. Your customers will be amazed at the opening action that can be achieved. **BLUMOTION**, for soft and effortless closing action, completes the picture in high quality of motion.

A light touch on the handle-less front or a light pull of the handle, and drawers and pull-outs will open as if by themselves. Regardless of where & how the front is touched. Whether heavy or light, wide or narrow pull-outs – the gentle opening support always remains the same.

Opening and closing is that easy



A light touch on the front is enough and drawers open as if by themselves. **BLUMOTION** provides soft and effortless closing action.

Easily-integrated, high performance technology



Application
- Can be used without having to change **MOVENTO** | **TANDEM** pull-outs



Assembly | Processing
- Tool-free drive unit assembly
- Separate drilling template
- No fixed connection to the drive system



Cabling
- Simple cabling
- One power supply unit is all that's required for power supply to the entire kitchen

Runner systems


Symbolic image

Runner systems 408
MOVENTO 410
TANDEM 430

Applications


Symbolic image

Standard cabinet 464
SPACE TOWER 470
Sink cabinet 476
Two drawers with a continuous front 480
Cabinet with different drawer depths | inner drawer 484
Cabinet with individual drawer 490
Cabinet with inset fronts 494
SERVO-DRIVE uno for bottom mount waste bin solutions 498

Accessories


Symbolic image

Cable holder 500
Synchronisation cable 500

Assembly, removal and adjustment


Symbolic image

Assembly, removal and adjustment

Short URL
www.blum.com/a450

Machine directive 711
Detailed information on the Machine Directive

Short URL
www.blum.com/s025

Pictograph

Item available on request

Web code – click on the code or enter it in the Product Configurator

Standard cabinet



- Electrical opening support system in conjunction with **BLUMOTION** – for soft and effortless closing action
- With vertical bracket profile
- No fixed connection to the drive system
- Pull-outs can be used unchanged
- Tool-free drive unit assembly
- Simple cabling
- Shallow installation depth

Cabling

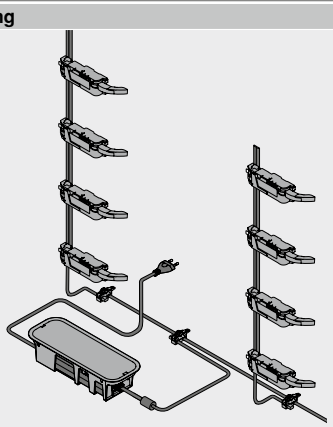

Order information

1a Blum distance bumper

	Diameter (mm)	Colour	Part no.
	Ø 5.0	TGR	993.0530
	Ø 8.0		993.0830.01

Front height FH (mm)	Blum distance bumper (pcs.)
Up to 300	2
Starting at 301	4

2 Bracket profile

	Length (mm)[1]	Material	Cable	Part no.
	650	Aluminium	With cable	Z10T650AA
	700			Z10T700AA
	710			Z10T710AA
	750			Z10T750AA
	800			Z10T800AA
	1170		Without cable	Z10T1170A

Consisting of:
2 1 x Bracket profile
Cutting 2 Internal cabinet height LH – 10 mm
[1] For cutting to size

3a Bracket profile attachment top/bottom – cross bar construction horizontal

	Colour	Material	Part no.
	TGR	Nylon	Z10D01E0.01

Consisting of:
3a 1 x Bracket profile attachment top/bottom

Alternative to 3a

3b Bracket profile attachment lower/back – cross bar construction vertical

	Colour	Material	Part no.
	TGR	Nylon	Z10D01EA.01

Consisting of:
3b 1 x Bracket profile attachment lower/back
– 1 x Bracket profile cover cap

9 Drive unit

	Colour	Material	Part no.
	TGR	Nylon	Z10A3000.04

Consisting of:
9 1 x Drive unit
Incl. pre-assembled lever extension

11 SERVO-DRIVE distribution cable set[2]

	Colour	Length (m)[1]	Part no.
	SZ	8	Z10K800AE

Consisting of:
11a 1 x **SERVO-DRIVE** distribution cable
11b 5 x Cable end protector
[1] For cutting to size
[2] Can be used as a distribution, bracket profile and communications cable

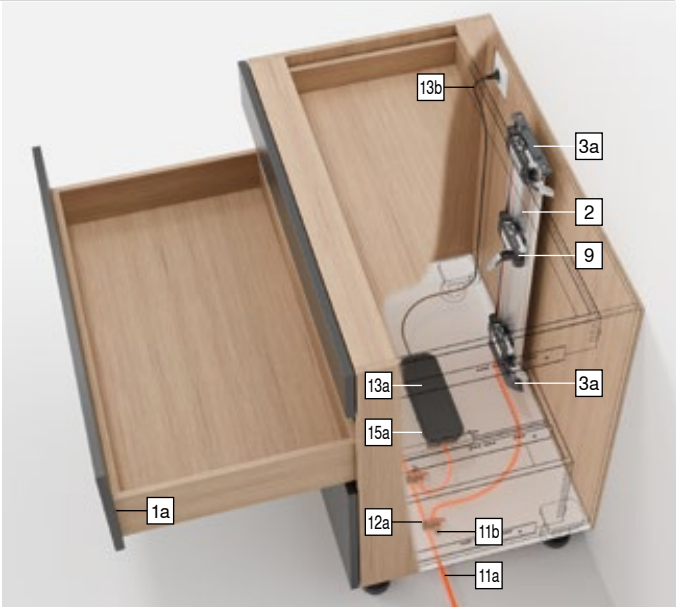

12 Connecting node set

	Colour	Material	Part no.
	SZ	Nylon	Z10V100E.01

Consisting of:
12a 1 x Connecting node
11b 2 x Cable end protector

Standard cabinet

Order information

13		SERVO-DRIVE power supply unit and flex[4]				
		Colour			SZ	
		Mains plug	Market[1]	Language package[2]	Language[3]	Part no.
	E	Europe	A	DE | EN | FR | IT | NL	Z10NE04EA	
			B	DA | EN | FI | NO | SV	Z10NE04EB	
			C	EL | EN | HR | SL | SR | TR	Z10NE04EC	
			D	EN | ES | FR | IT | PT	Z10NE04ED	
			E	CS | HU | PL | SK	Z10NE04EE	
			F	BG | ET | LT | LV | RO | RU | UK	Z10NE04EF	
			I	EN	Z10NE04EI	
	B	GB	A	DE | EN | FR | IT | NL	Z10NE04BA	
			I	EN	Z10NE04BI	
	H	IN			Z10NE04HI	
	I	IL	A	DE | EN | FR | IT | NL	Z10NE04IA	
	K	AU	I	EN	Z10NE04KI	
	N	CN	H	EN | ZH | KO	Z10NE04NH	
	R	KR			Z10NE04RH	
	S	BR	K	EN | ES | PT	Z10NE04SK	
	T	TW	H	EN | ZH | KO	Z10NE04TH	
	U	US | CA	G	EN | ES | FR	Z10NE04UG	
		JP	J	JA	Z10NE04UJ	
	Z	ZA	I	EN	Z10NE04ZI	

Consisting of:
13a 1 x **SERVO-DRIVE** power supply unit
Output flex – length 2 m
Incl. operating and installation instructions
13b 1 x Flex
Length 1.5–1.8 m, incl. plug

[1] Market descriptions as per ISO 3166
[2] Language package – operating instructions
[3] Language descriptions as per ISO 639
[4] Required for two or more drive units

15a		Power supply unit housing – mounting on the ground[1]		
		Colour	Material	Part no.
		TGR	Nylon	Z10NG000

Consisting of:
15a 1 x Power supply unit housing – mounting on the ground
Incl. cover

[1] For **SERVO-DRIVE** power supply unit

Alternative to 15a

15b		Power supply unit housing – wall fixing[1]		
		Colour	Material	Part no.
		WS	Nylon	Z10NG120

Consisting of:
15b 1 x Power supply unit housing – wall fixing

[1] For **SERVO-DRIVE** power supply unit

Accessories

–		Cable holder[1]		
		Colour	Material	Part no.
		WS	Nylon	Z10K0009

Consisting of:
– 1 x Cable holder

[1] E.g. for fixing the **SERVO-DRIVE** distribution cable

–		Synchronisation cable[1]		
		Length (mm)	Colour	Part no.
		80	WS	Z10K008S
		500		Z10K050S
		1200		Z10K120S
		1600		Z10K160S

Consisting of:
– 1 x Synchronisation cable

[1] Connects two drive units that need to activate simultaneously

Colour		Colour	
SZ	Black	WGR	White grey
TGR	Dark grey	WS	White

4

Reference pages

Overview	463	Machine directive	711	**Assembly, removal and adjustment**	
MOVENTO	410	More technical details	708		
TANDEM	430				
Planning – cross bar construction horizontal	466			Short URL	
Planning – cross bar construction vertical	468			www.blum.com/a450	
Accessories	500				
Blum services	602				

Standard cabinet

Planning – cross bar construction horizontal

Cabinet

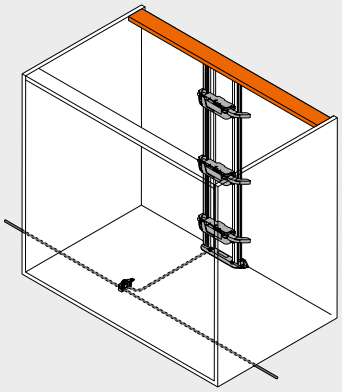

Position – drive unit

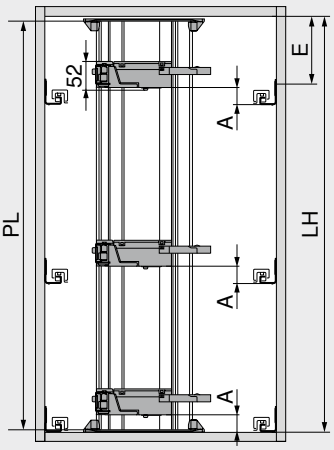

PL = LH – 10 mm
Round down to the nearest tenth

A	Distance between the bottom edge of the cabinet profile and the bottom edge of the drive unit
E	Distance between the bottom edge of the cabinet top panel and the fixing position of the runner
LH	Internal cabinet height
PL	Bracket profile length

Position – drive unit

Runner systems	Drawer height SKH (mm)	Internal cabinet width LW (mm)					
		224–234		235–428		≥ 429	
		A (mm)	E min. (mm)	A (mm)	E min. (mm)	A (mm)	E min. (mm)
MOVENTO	≥ 79	–	–	60	74	35	49
TANDEM	≥ 79	55	71	55	71	35	51

A	Distance between the bottom edge of the cabinet profile and the bottom edge of the drive unit	–	Not possible
E	Distance between the bottom edge of the cabinet top panel and the fixing position of the runner		

Base – drilling pattern

Lower cabling

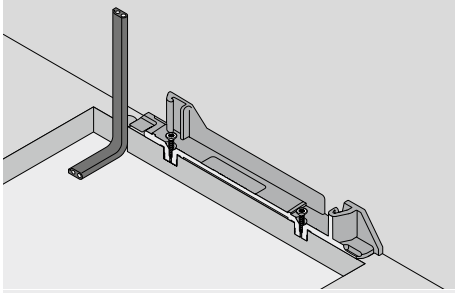

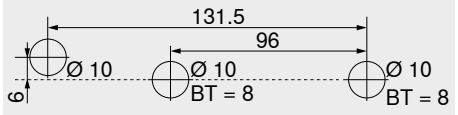

BT Drilling depth

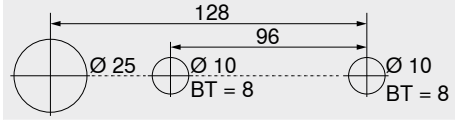

Alternative drilling pattern – **MINIPRESS top** | **MINIPRESS**
BT Drilling depth

Back cabling

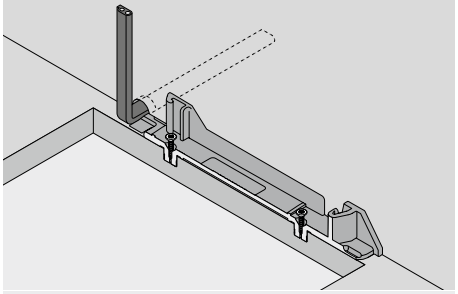

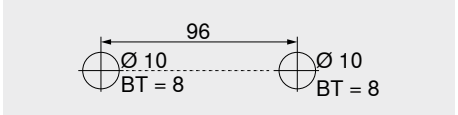

BT Drilling depth

Front assembly – position – Blum distance bumper

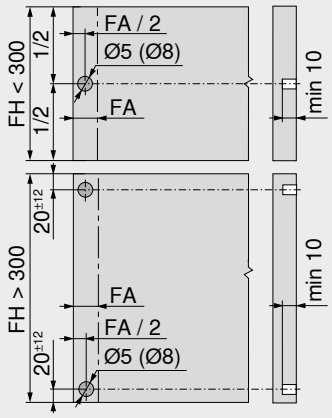

The Blum distance bumper creates and maintains the required trigger path of 2 mm

Front height FH (mm)	Blum distance bumper (pcs.)
Up to 300	2
Starting at 301	4

FA	Front overlay
FH	Front height

Standard cabinet

Planning – cross bar construction horizontal

Drilling distances – base | cross bar

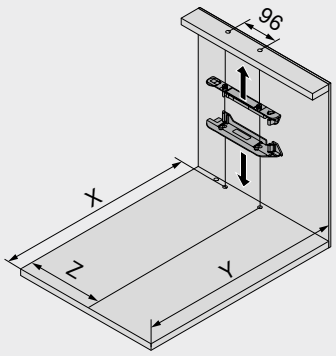

Drawer height SKH (mm)	X (mm)	Y (mm)
≥ 79	NL + 16	NL + 30

NL	Nominal length
X	Drilling position
Y	Min. space requirement
Z	Dimension of engagement

Runner systems	Drawer height SKH (mm)	Internal cabinet width LW (mm)							
		224–234		235–388		389–428		≥ 429	
		Z (mm)	Lever extension	Z (mm)	Lever extension	Z (mm)	Lever extension	Z (mm)	Lever extension
MOVENTO	≥ 79	–	–	164	●	164	●	LW / 2	●
TANDEM	≥ 79	164	–	164	●	LW / 2	●	LW / 2	●

LW	Internal cabinet width	●	Required
Z	Dimension of engagement	–	Not possible

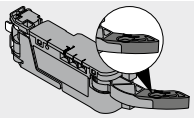

Lever extension

Space requirement and safety distance – power supply unit housing

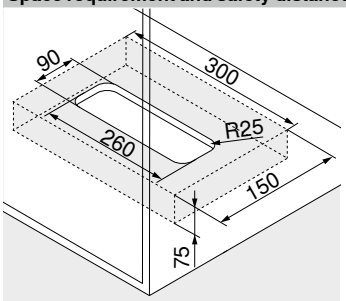

Mounting on the ground

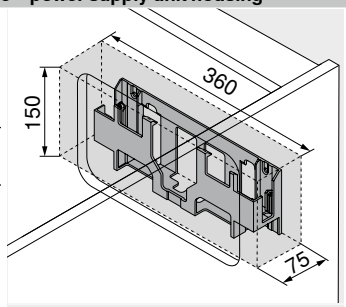

Wall fixing

Attention

Maintain a 30 mm safety distance from the bottom edge (base fixing) and/or front edge (wall fixing) and side edges of the power supply unit housing to the neighbouring elements!

Air must be able to circulate, otherwise the **SERVO-DRIVE** power supply unit could overheat!

Reference pages

Overview	463	Blum services	602	**Assembly, removal and adjustment**	
MOVENTO	410	Machine directive	711		
TANDEM	430	More technical details	708		
Order information	464			Short URL	
Planning – cross bar construction vertical	468			www.blum.com/a450	
Accessories	500				

Standard cabinet

Planning – cross bar construction vertical

Cabinet

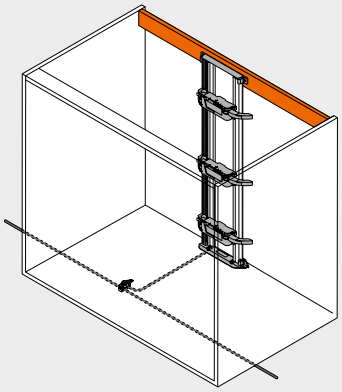

Position – drive unit

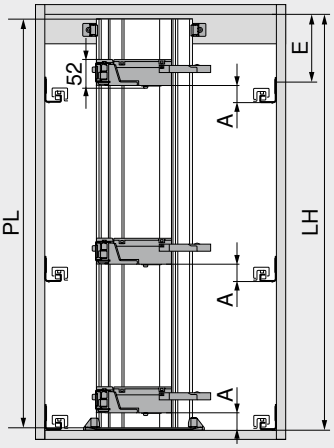

PL = LH – 10 mm
Round down to the nearest tenth

A	Distance between the bottom edge of the cabinet profile and the bottom edge of the drive unit
E	Distance between the bottom edge of the cabinet top panel and the fixing position of the runner
LH	Internal cabinet height
PL	Bracket profile length

Position – drive unit

Runner systems	Drawer height SKH (mm)	Internal cabinet width LW (mm)					
		224–234		235–428		≥ 429	
		A (mm)	E min. (mm)	A (mm)	E min. (mm)	A (mm)	E min. (mm)
MOVENTO	≥ 79	–	–	60	84	35	54
TANDEM	≥ 79	55	81	55	81	35	61

A	Distance between the bottom edge of the cabinet profile and the bottom edge of the drive unit	–	Not possible
E	Distance between the bottom edge of the cabinet top panel and the fixing position of the runner		

Base – drilling pattern

Lower cabling

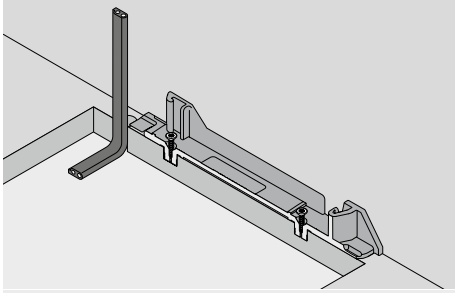

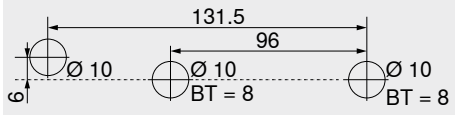

BT Drilling depth

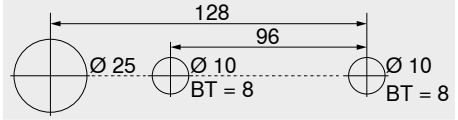

Alternative drilling pattern – **MINIPRESS top** | **MINIPRESS**
BT Drilling depth

Back cabling

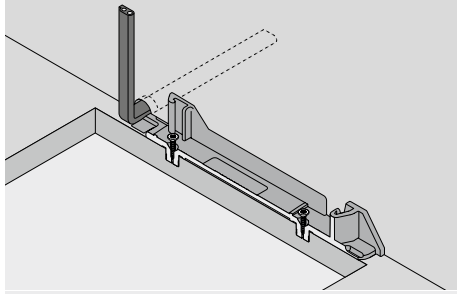

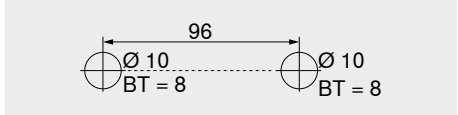

BT Drilling depth

Front assembly – position – Blum distance bumper

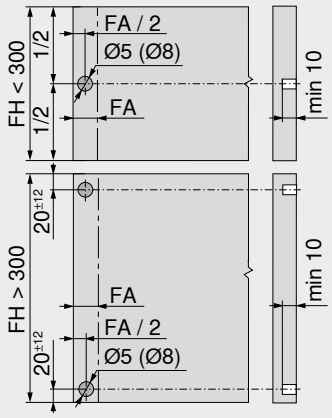

The Blum distance bumper creates and maintains the required trigger path of 2 mm

Front height FH (mm)	Blum distance bumper (pcs.)
Up to 300	2
Starting at 301	4

FA	Front overlay
FH	Front height

Standard cabinet

Planning – cross bar construction vertical

Drilling distances – base | cross bar

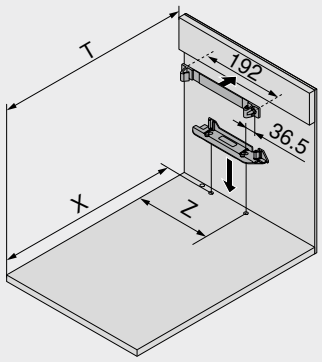

Drawer height SKH (mm)	X (mm)	T (mm)
≥ 79	NL + 16	NL + 31

NL	Nominal length
X	Drilling position
T	Position – front edge–cross member
Z	Dimension of engagement

Runner systems	Drawer height SKH (mm)	Internal cabinet width LW (mm)							
		224–234		235–388		389–428		≥ 429	
		Z (mm)	Lever extension	Z (mm)	Lever extension	Z (mm)	Lever extension	Z (mm)	Lever extension
MOVENTO	≥ 79	–	–	164	●	164	●	LW / 2	●
TANDEM	≥ 79	164	–	164	●	LW / 2	●	LW / 2	●

LW	Internal cabinet width	●	Required
Z	Dimension of engagement	–	Not possible

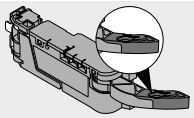

Lever extension

Space requirement and safety distance – power supply unit housing

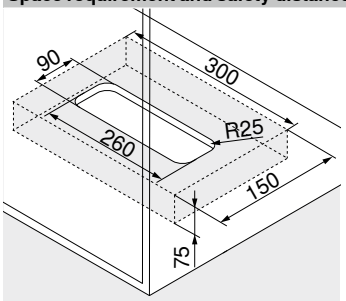

Mounting on the ground

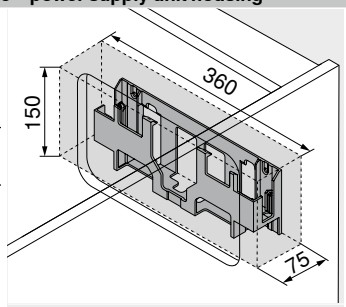

Wall fixing

Attention

Maintain a 30 mm safety distance from the bottom edge (base fixing) and/or front edge (wall fixing) and side edges of the power supply unit housing to the neighbouring elements!

Air must be able to circulate, otherwise the **SERVO-DRIVE** power supply unit could overheat!

Reference pages

Overview	463	Blum services	602	**Assembly, removal and adjustment**	
MOVENTO	410	Machine directive	711		
TANDEM	430	More technical details	708		
Order information	464			Short URL	
Planning – cross bar construction horizontal	466			www.blum.com/a450	
Accessories	500				

SPACE TOWER



- Electrical opening support system in conjunction with **BLUMOTION** – for soft and effortless closing action
- With vertical bracket profile
- No fixed connection to the drive system
- Pull-outs can be used unchanged
- Tool-free drive unit assembly
- Simple cabling
- Shallow installation depth

Cabling

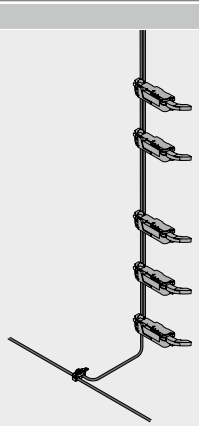

Order information

2 Bracket profile

Length (mm)[1]	Material	Cable	Part no.
650	Aluminium	With cable	Z10T650AA
700			Z10T700AA
710			Z10T710AA
750			Z10T750AA
800			Z10T800AA
1170		Without cable	Z10T1170A

Consisting of:
2 1 x Bracket profile

Cutting **2** Internal cabinet height LH – 10 mm

[1] For cutting to size

3a Bracket profile attachment top/bottom – cross bar construction horizontal

Colour	Material	Part no.
TGR	Nylon	Z10D01E0.01

Consisting of:
3a 1 x Bracket profile attachment top/bottom

Alternative to 3a

3b Bracket profile attachment lower/back – cross bar construction vertical

Colour	Material	Part no.
TGR	Nylon	Z10D01EA.01

Consisting of:
3b 1 x Bracket profile attachment lower/back
– 1 x Bracket profile cover cap

9 Drive unit

Colour	Material	Part no.
TGR	Nylon	Z10A3000.04

Consisting of:
9 1 x Drive unit
Incl. pre-assembled lever extension

11 SERVO-DRIVE distribution cable set[2]

Colour	Length (m)[1]	Part no.
SZ	8	Z10K800AE

Consisting of:
11a 1 x **SERVO-DRIVE** distribution cable
11b 5 x Cable end protector

[1] For cutting to size
[2] Can be used as a distribution, bracket profile and communications cable

12 Connecting node set

Colour	Material	Part no.
SZ	Nylon	Z10V100E.01

Consisting of:
12a 1 x Connecting node
11b 2 x Cable end protector



SPACE TOWER

Order information

13		SERVO-DRIVE power supply unit and flex[4]				
		Colour			SZ	
		Mains plug	Market[1]	Language package[2]	Language[3]	Part no.
	E	Europe	A	DE | EN | FR | IT | NL	Z10NE04EA	
			B	DA | EN | FI | NO | SV	Z10NE04EB	
			C	EL | EN | HR | SL | SR | TR	Z10NE04EC	
			D	EN | ES | FR | IT | PT	Z10NE04ED	
			E	CS | HU | PL | SK	Z10NE04EE	
			F	BG | ET | LT | LV | RO | RU | UK	Z10NE04EF	
			I	EN	Z10NE04EI	
	B	GB	A	DE | EN | FR | IT | NL	Z10NE04BA	
			I	EN	Z10NE04BI	
	H	IN			Z10NE04HI	
	I	IL	A	DE | EN | FR | IT | NL	Z10NE04IA	
	K	AU	I	EN	Z10NE04KI	
	N	CN	H	EN | ZH | KO	Z10NE04NH	
	R	KR			Z10NE04RH	
	S	BR	K	EN | ES | PT	Z10NE04SK	
	T	TW	H	EN | ZH | KO	Z10NE04TH	
	U	US | CA	G	EN | ES | FR	Z10NE04UG	
		JP	J	JA	Z10NE04UJ	
	Z	ZA	I	EN	Z10NE04ZI	

Consisting of:

13a 1 x **SERVO-DRIVE** power supply unit
Output flex – length 2 m
Incl. operating and installation instructions

13b 1 x Flex
Length 1.5–1.8 m, incl. plug

[1] Market descriptions as per ISO 3166
[2] Language package – operating instructions
[3] Language descriptions as per ISO 639
[4] Required for two or more drive units

15a		Power supply unit housing – mounting on the ground[1]		
		Colour	Material	Part no.
		TGR	Nylon	Z10NG000

Consisting of:

15a 1 x Power supply unit housing – mounting on the ground
Incl. cover

[1] For **SERVO-DRIVE** power supply unit

Alternative to 15a

15b		Power supply unit housing – wall fixing[1]		
		Colour	Material	Part no.
		WGR	Nylon	Z10NG120

Consisting of:

15b 1 x Power supply unit housing – wall fixing

[1] For **SERVO-DRIVE** power supply unit

Accessories

–		Cable holder[1]		
		Colour	Material	Part no.
		WS	Nylon	Z10K0009

Consisting of:

– 1 x Cable holder

[1] E.g. for fixing the **SERVO-DRIVE** distribution cable

Colour		Colour	
SZ	Black	WGR	White grey
TGR	Dark grey	WS	White

Reference pages

Overview	463	Machine directive	711	**Assembly, removal and adjustment**	
MOVENTO	410	More technical details	708		
TANDEM	430				
Planning – top bracket profile	472			Short URL	
Planning – bottom bracket profile	474			www.blum.com/a450	
Accessories	500				
Blum services	602				

SPACE TOWER

Planning – top bracket profile

Cabinet

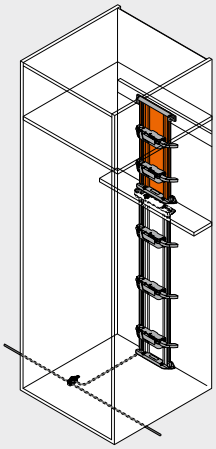

Position – drive unit

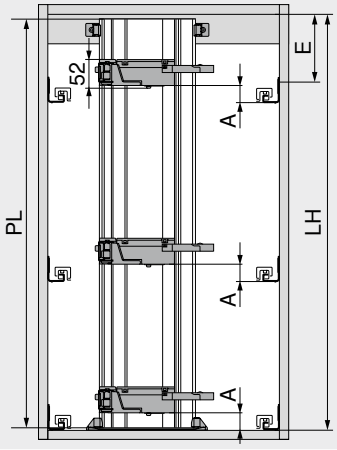

PL = LH – 10 mm
Round down to the nearest tenth

A	Distance between the bottom edge of the cabinet profile and the bottom edge of the drive unit
E	Distance between the bottom edge of the cabinet top panel and the fixing position of the cabinet profile
LH	Internal cabinet height
PL	Bracket profile length

Position – drive unit

Runner systems	Drawer height SKH (mm)	Internal cabinet width LW (mm)					
		224–234		235–428		≥ 429	
		A (mm)	E min. (mm)	A (mm)	E min. (mm)	A (mm)	E min. (mm)
MOVENTO	≥ 79	–	–	60	74	35	49
TANDEM	≥ 79	55	71	55	71	35	51

A	Distance between the bottom edge of the cabinet profile and the bottom edge of the drive unit	–	Not possible
E	Distance between the bottom edge of the cabinet top panel and the fixing position of the runner		

Base – drilling pattern

Lower cabling

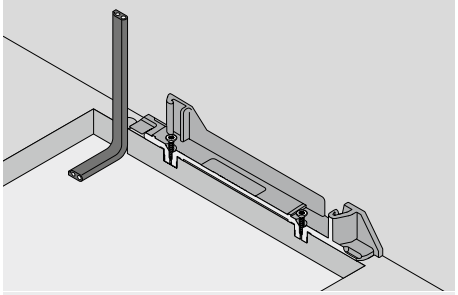

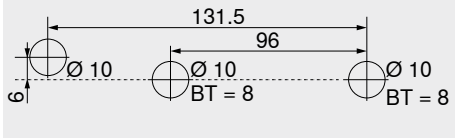

BT Drilling depth

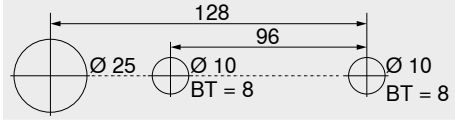

Alternative drilling pattern – **MINIPRESS top** | **MINIPRESS**
BT Drilling depth

Back cabling

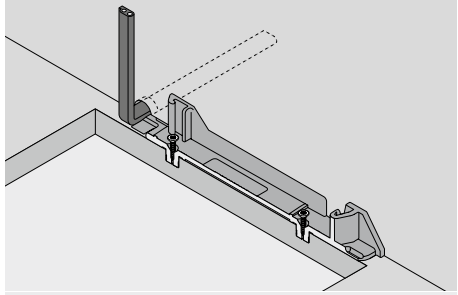

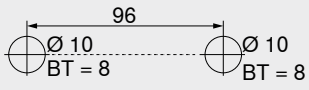

BT Drilling depth

SPACE TOWER

Planning – top bracket profile

Drilling distances – base | cross bar

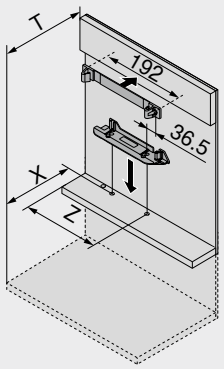

Drawer height SKH (mm)	X (mm)	T (mm)
≥ 79	NL + 16	NL + 31

NL	Nominal length
X	Drilling position
T	Position – front edge–cross member
Z	Dimension of engagement

Runner systems	Drawer height SKH (mm)	Internal cabinet width LW (mm)							
		224–234		235–388		389–428		≥ 429	
		Z (mm)	Lever extension	Z (mm)	Lever extension	Z (mm)	Lever extension	Z (mm)	Lever extension
MOVENTO	≥ 79	–	–	164	●	164	●	LW / 2	●
TANDEM	≥ 79	164	–	164	●	LW / 2	●	LW / 2	●

LW	Internal cabinet width	●	Required
Z	Dimension of engagement	–	Not possible

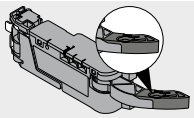

Lever extension

Space requirement and safety distance – power supply unit housing

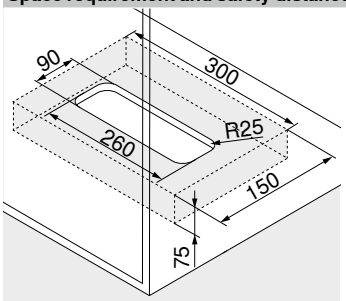

Mounting on the ground

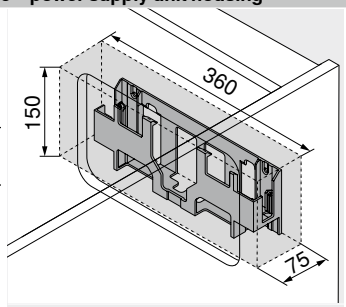

Wall fixing

Attention

Maintain a 30 mm safety distance from the bottom edge (base fixing) and/or front edge (wall fixing) and side edges of the power supply unit housing to the neighbouring elements!

Air must be able to circulate, otherwise the **SERVO-DRIVE** power supply unit could overheat!

Reference pages

Overview	463	Blum services	602	**Assembly, removal and adjustment**	
MOVENTO	410	Machine directive	711		
TANDEM	430	More technical details	708		
Order information	470			Short URL	
Planning – bottom bracket profile	474			www.blum.com/a450	
Accessories	500				

SPACE TOWER

Planning – bottom bracket profile

Cabinet

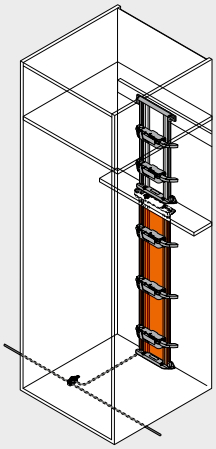

Position – drive unit

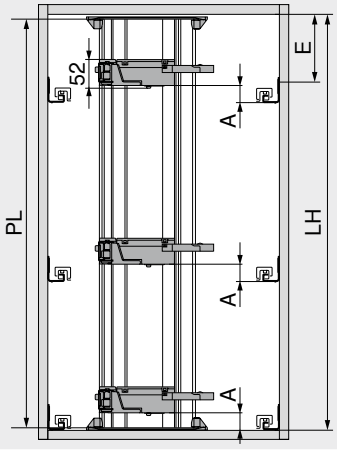

PL = LH – 10 mm
Round down to the nearest tenth

A	Distance between the bottom edge of the cabinet profile and the bottom edge of the drive unit
E	Distance between the bottom edge of the cabinet top panel and the fixing position of the cabinet profile
LH	Internal cabinet height
PL	Bracket profile length

Position – drive unit

Runner systems	Drawer height SKH (mm)	Internal cabinet width LW (mm)					
		224–234		235–428		≥ 429	
		A (mm)	E min. (mm)	A (mm)	E min. (mm)	A (mm)	E min. (mm)
MOVENTO	≥ 79	–	–	60	74	35	49
TANDEM	≥ 79	55	71	55	71	35	51

A	Distance between the bottom edge of the cabinet profile and the bottom edge of the drive unit	–	Not possible
E	Distance between the bottom edge of the cabinet top panel and the fixing position of the runner		

Base – drilling pattern

Lower cabling

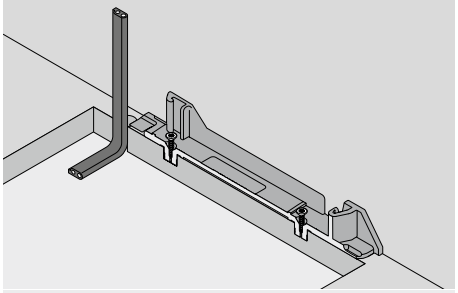

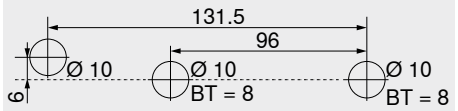

BT Drilling depth

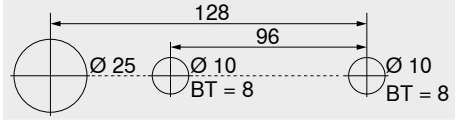

Alternative drilling pattern – **MINIPRESS top** | **MINIPRESS**
BT Drilling depth

Back cabling

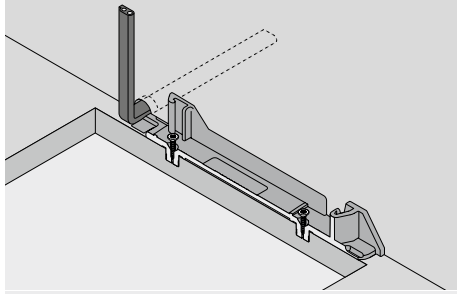

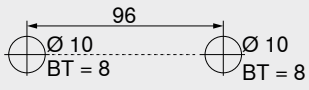

BT Drilling depth

SPACE TOWER

Planning – bottom bracket profile

Drilling distances – base | cross bar

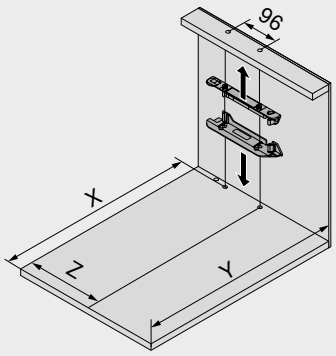

Drawer height SKH (mm)	X (mm)	Y (mm)
≥ 79	NL + 16	NL + 30

NL	Nominal length
X	Drilling position
Y	Min. space requirement
Z	Dimension of engagement

Runner systems	Drawer height SKH (mm)	Internal cabinet width LW (mm)							
		224–234		235–388		389–428		≥ 429	
		Z (mm)	Lever extension	Z (mm)	Lever extension	Z (mm)	Lever extension	Z (mm)	Lever extension
MOVENTO	≥ 79	–	–	164	●	164	●	LW / 2	●
TANDEM	≥ 79	164	–	164	●	LW / 2	●	LW / 2	●

LW	Internal cabinet width	●	Required
Z	Dimension of engagement	–	Not possible

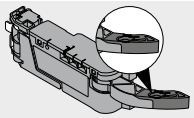

Lever extension

Space requirement and safety distance – power supply unit housing

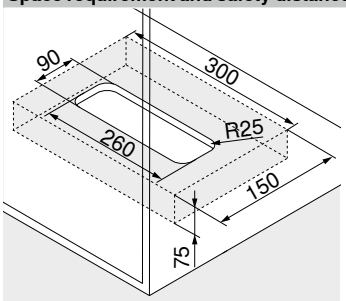

Mounting on the ground

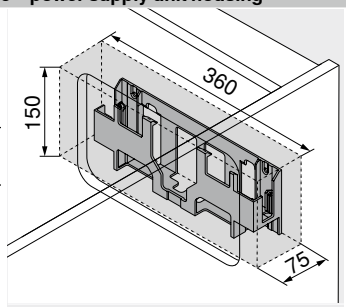

Wall fixing

Attention

Maintain a 30 mm safety distance from the bottom edge (base fixing) and/or front edge (wall fixing) and side edges of the power supply unit housing to the neighbouring elements!

Air must be able to circulate, otherwise the **SERVO-DRIVE** power supply unit could overheat!

Reference pages

Overview	463	Blum services	602	**Assembly, removal and adjustment**	
MOVENTO	410	Machine directive	711		
TANDEM	430	More technical details	708		
Order information	470			Short URL	
Planning – top bracket profile	472			www.blum.com/a450	
Accessories	500				

Sink cabinet

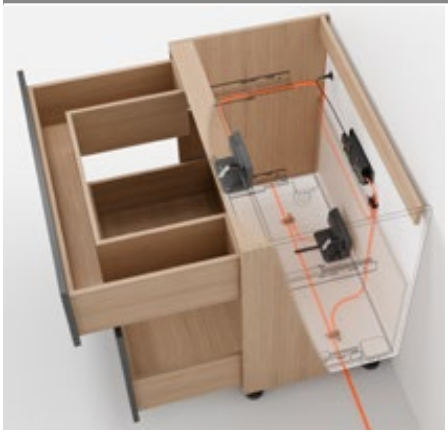

- Electrical opening support system in conjunction with **BLUMOTION** – for soft and effortless closing action
- With attachment bracket
- No fixed connection to the drive system
- Pull-outs can be used unchanged
- Quick assembly of pre-mounted parts

Cabling

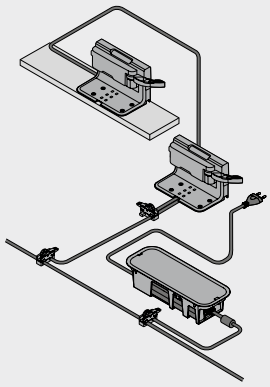

Order information

1a Blum distance bumper

	Diameter (mm)	Colour	Part no.
	Ø 5.0	TGR	993.0530
	Ø 8.0		993.0830.01

Front height FH (mm)	Blum distance bumper (pcs.)
Up to 300	2
Starting at 301	4

5 Attachment bracket 1 tier

	Colour	Material	Part no.
	TGR	Nylon	Z10D0311

Consisting of:
5 1 x Attachment bracket 1 tier

9 Drive unit

	Colour	Material	Part no.
	TGR	Nylon	Z10A3000.04

Consisting of:
9 1 x Drive unit
Incl. pre-assembled lever extension

9a Drip protection feature

	Colour	Material	Part no.
	TGR	Nylon	Z10D0316

Consisting of:
9a 1 x Drip protection feature

11 SERVO-DRIVE distribution cable set[2]

	Colour	Length (m)[1]	Part no.
	SZ	8	Z10K800AE

Consisting of:
11a 1 x **SERVO-DRIVE** distribution cable
11b 5 x Cable end protector
[1] For cutting to size
[2] Can be used as a distribution, bracket profile and communications cable

12 Connecting node set

	Colour	Material	Part no.
	SZ	Nylon	Z10V100E.01

Consisting of:
12a 1 x Connecting node
11b 2 x Cable end protector

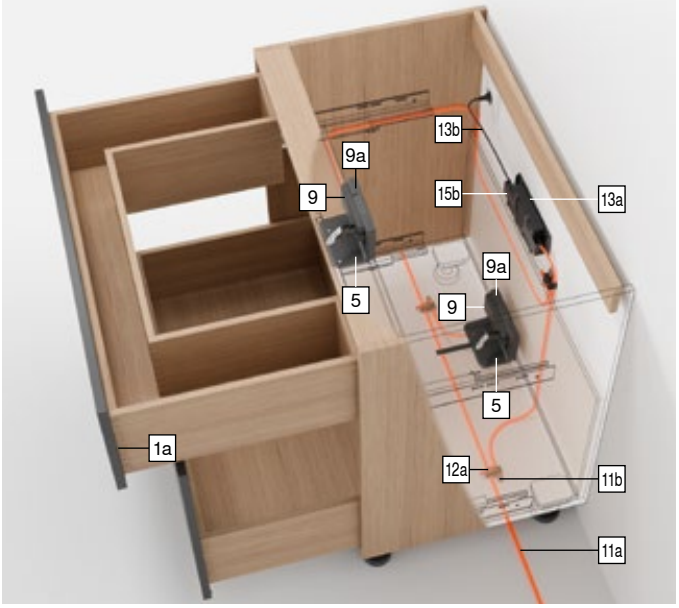

Sink cabinet

Order information

13		SERVO-DRIVE power supply unit and flex[4]				
		Colour			SZ	
		Mains plug	Market[1]	Language package[2]	Language[3]	Part no.
	E	Europe	A	DE | EN | FR | IT | NL	Z10NE04EA	
			B	DA | EN | FI | NO | SV	Z10NE04EB	
			C	EL | EN | HR | SL | SR | TR	Z10NE04EC	
			D	EN | ES | FR | IT | PT	Z10NE04ED	
			E	CS | HU | PL | SK	Z10NE04EE	
			F	BG | ET | LT | LV | RO | RU | UK	Z10NE04EF	
			I	EN	Z10NE04EI	
	B	GB	A	DE | EN | FR | IT | NL	Z10NE04BA	
			I	EN	Z10NE04BI	
	H	IN			Z10NE04HI	
	I	IL	A	DE | EN | FR | IT | NL	Z10NE04IA	
	K	AU	I	EN	Z10NE04KI	
	N	CN	H	EN | ZH | KO	Z10NE04NH	
	R	KR			Z10NE04RH	
	S	BR	K	EN | ES | PT	Z10NE04SK	
	T	TW	H	EN | ZH | KO	Z10NE04TH	
	U	US | CA	G	EN | ES | FR	Z10NE04UG	
		JP	J	JA	Z10NE04UJ	
	Z	ZA	I	EN	Z10NE04ZI	

Consisting of:

13a 1 x **SERVO-DRIVE** power supply unit
Output flex – length 2 m
Incl. operating and installation instructions

13b 1 x Flex
Length 1.5–1.8 m, incl. plug

[1] Market descriptions as per ISO 3166
[2] Language package – operating instructions
[3] Language descriptions as per ISO 639
[4] Required for two or more drive units

15a		Power supply unit housing – mounting on the ground[1]		
		Colour	Material	Part no.
		TGR	Nylon	Z10NG000

Consisting of:

15a 1 x Power supply unit housing – mounting on the ground
Incl. cover

[1] For **SERVO-DRIVE** power supply unit

Alternative to 15a

15b		Power supply unit housing – wall fixing[1]		
		Colour	Material	Part no.
		WGR	Nylon	Z10NG120

Consisting of:

15b 1 x Power supply unit housing – wall fixing

[1] For **SERVO-DRIVE** power supply unit

Accessories

–		Cable holder[1]		
		Colour	Material	Part no.
		WS	Nylon	Z10K0009

Consisting of:

– 1 x Cable holder

[1] E.g. for fixing the **SERVO-DRIVE** distribution cable

Colour		Colour	
SZ	Black	WGR	White grey
TGR	Dark grey	WS	White

Reference pages

Overview	463	More technical details	708	**Assembly, removal and adjustment**	
MOVENTO	410				
TANDEM	430			Short URL	
Planning	478			www.blum.com/a450	
Accessories	500				
Blum services	602				
Machine directive	711				

Sink cabinet

Planning

Cabinet

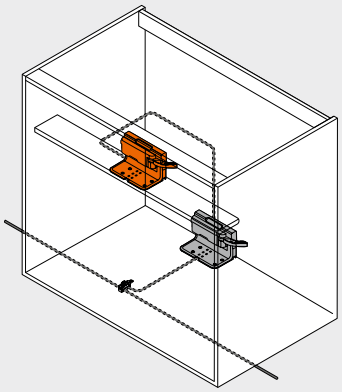

Cross member – attachment bracket 1 tier

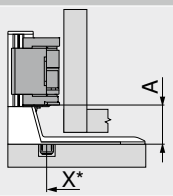

Centre piece

A	Distance between the bottom edge of the attachment bracket and the bottom edge of the drive unit
X	Drilling position
*	Measured from cabinet front edge

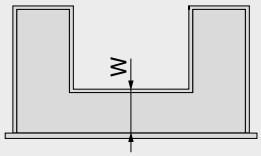

W	Distance between front edge of drawer base and back edge of centre piece Min. 100 mm

Runner systems	Drawer height SKH (mm)	A (mm)
MOVENTO	≥ 79	35
TANDEM	≥ 79	35

A Distance between the bottom edge of the attachment bracket and the bottom edge of the drive unit

Cross member – attachment bracket 1 tier

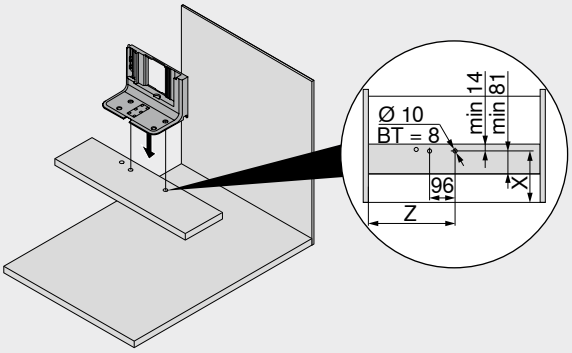

Runner systems	Drawer height SKH (mm)	Internal cabinet width LW (mm) ≥ 429	
		X (mm)	Z (mm)
MOVENTO	≥ 79	W + 24	LW / 2
TANDEM	≥ 79	W + 24	LW / 2

BT	Drilling depth
LW	Internal cabinet width
W	Distance between the front edge of the drawer base and the centre piece
X	Drilling position
Z	Dimension of engagement

Base – drilling pattern

Lower cabling

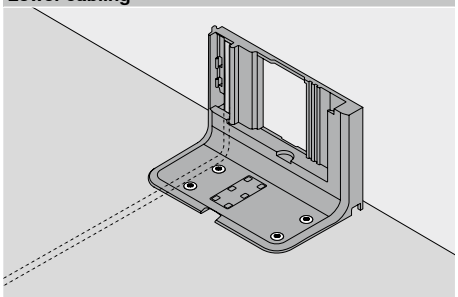

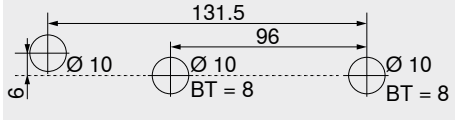

BT Drilling depth

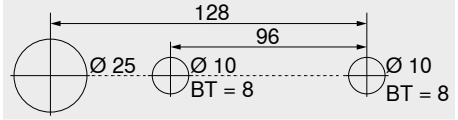

Alternative drilling pattern – **MINIPRESS top** | **MINIPRESS**

BT Drilling depth

Front assembly – position – Blum distance bumper

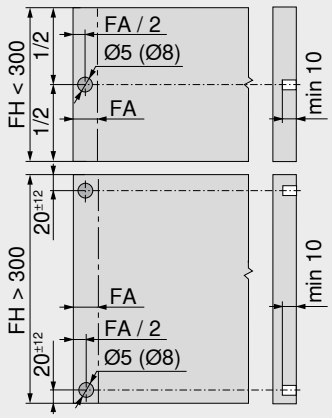

The Blum distance bumper creates and maintains the required trigger path of 2 mm

Front height FH (mm)	Blum distance bumper (pcs.)
Up to 300	2
Starting at 301	4

FA	Front overlay
FH	Front height

Sink cabinet

Planning

Cabinet

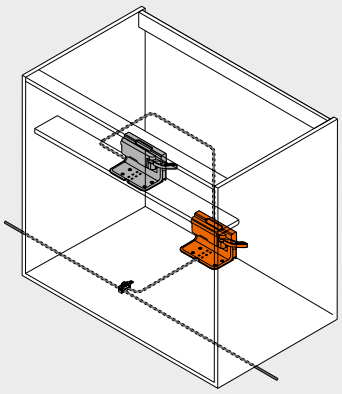

Base – attachment bracket 1 tier

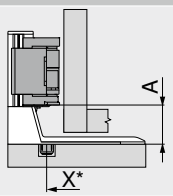

A	Distance between the bottom edge of the attachment bracket and the bottom edge of the drive unit
X	Drilling position
*	Measured from cabinet front edge

Runner systems	Drawer height SKH (mm)	Internal cabinet width LW (mm)
		≥ 429
		A (mm)
MOVENTO	≥ 79	35
TANDEM	≥ 79	35

A	Distance between the bottom edge of the attachment bracket and the bottom edge of the drive unit
LW	Internal cabinet width

Base – attachment bracket 1 tier

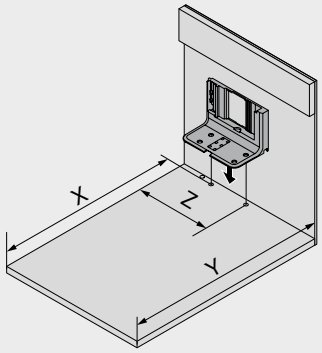

Drawer height SKH (mm)	X (mm)	Y (mm)	Z (mm)
≥ 79	NL + 16	NL + 30	LW / 2

LW	Internal cabinet width
NL	Nominal length
X	Drilling position
Y	Min. space requirement
Z	Dimension of engagement

Space requirement and safety distance – power supply unit housing

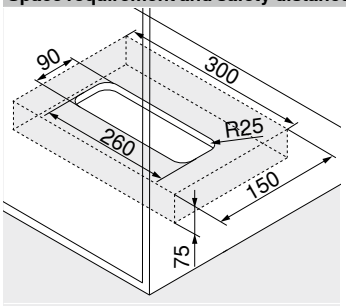

Mounting on the ground

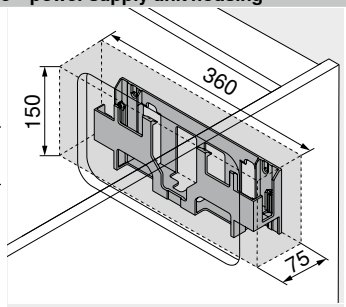

Wall fixing

Attention

Maintain a 30 mm safety distance from the bottom edge (base fixing) and/or front edge (wall fixing) and side edges of the power supply unit housing to the neighbouring elements!

Air must be able to circulate, otherwise the **SERVO-DRIVE** power supply unit could overheat!

Reference pages

Overview	463	Machine directive	711	**Assembly, removal and adjustment**	
MOVENTO	410	More technical details	708		
TANDEM	430			Short URL	
Order information	476			www.blum.com/a450	
Accessories	500				
Blum services	602				

Two drawers with a continuous front



- Electrical opening support system in conjunction with **BLUMOTION** – for soft and effortless closing action
- Synchronised triggering of two drawers and | or wide applications
- With attachment bracket
- No fixed connection to the drive system
- Pull-outs can be used unchanged
- Quick assembly of pre-mounted parts

Cabling

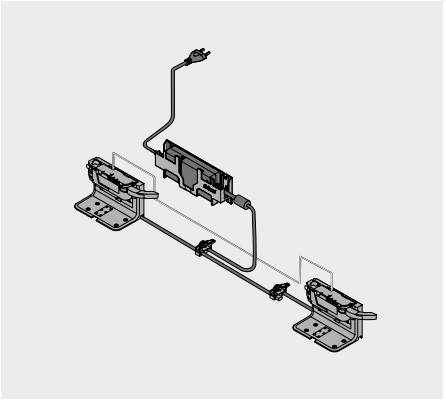

Order information

1a Blum distance bumper

	Diameter (mm)	Colour	Part no.
	Ø 5.0	TGR	993.0530
	Ø 8.0		993.0830.01

Front height FH (mm)	Blum distance bumper (pcs.)
Up to 300	2
Starting at 301	4

5 Attachment bracket 1 tier

	Colour	Material	Part no.
	TGR	Nylon	Z10D0311

Consisting of:
5 1 x Attachment bracket 1 tier

9 Drive unit

	Colour	Material	Part no.
	TGR	Nylon	Z10A3000.04

Consisting of:
9 1 x Drive unit
Incl. pre-assembled lever extension

11 SERVO-DRIVE distribution cable set[2]

	Colour	Length (m)[1]	Part no.
	SZ	8	Z10K800AE

Consisting of:
11a 1 x **SERVO-DRIVE** distribution cable
11b 5 x Cable end protector
[1] For cutting to size
[2] Can be used as a distribution, bracket profile and communications cable

12 Connecting node set

	Colour	Material	Part no.
	SZ	Nylon	Z10V100E.01

Consisting of:
12a 1 x Connecting node
11b 2 x Cable end protector

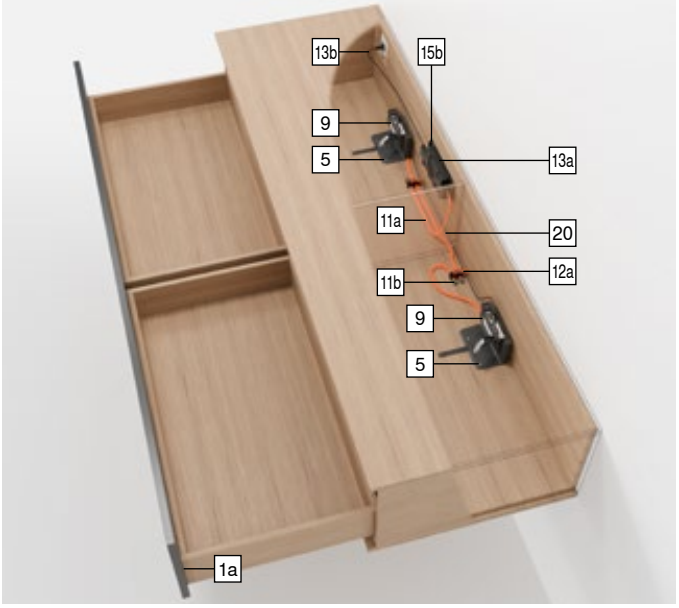

Two drawers with a continuous front

Order information

13 SERVO-DRIVE power supply unit and flex[4]

Colour: SZ

Mains plug	Market[1]	Language package[2]	Language[3]	Part no.
E	Europe	A	DE | EN | FR | IT | NL	Z10NE04EA
		B	DA | EN | FI | NO | SV	Z10NE04EB
		C	EL | EN | HR | SL | SR | TR	Z10NE04EC
		D	EN | ES | FR | IT | PT	Z10NE04ED
		E	CS | HU | PL | SK	Z10NE04EE
		F	BG | ET | LT | LV | RO | RU | UK	Z10NE04EF
		I	EN	Z10NE04EI
B	GB	A	DE | EN | FR | IT | NL	Z10NE04BA
		I	EN	Z10NE04BI
H	IN			Z10NE04HI
I	IL	A	DE | EN | FR | IT | NL	Z10NE04IA
K	AU	I	EN	Z10NE04KI
N	CN	H	EN | ZH | KO	Z10NE04NH
R	KR			Z10NE04RH
S	BR	K	EN | ES | PT	Z10NE04SK
T	TW	H	EN | ZH | KO	Z10NE04TH
U	US | CA	G	EN | ES | FR	Z10NE04UG
	JP	J	JA	Z10NE04UJ
Z	ZA	I	EN	Z10NE04ZI

Consisting of:
13a 1 x **SERVO-DRIVE** power supply unit
Output flex – length 2 m
Incl. operating and installation instructions
13b 1 x Flex
Length 1.5–1.8 m, incl. plug

[1] Market descriptions as per ISO 3166
[2] Language package – operating instructions
[3] Language descriptions as per ISO 639
[4] Required for two or more drive units

15a Power supply unit housing – mounting on the ground[1]

Colour	Material	Part no.
TGR	Nylon	Z10NG000

Consisting of:
15a 1 x Power supply unit housing – mounting on the ground
Incl. cover

[1] For **SERVO-DRIVE** power supply unit

Alternative to 15a

15b Power supply unit housing – wall fixing[1]

Colour	Material	Part no.
WGR	Nylon	Z10NG120

Consisting of:
15b 1 x Power supply unit housing – wall fixing

[1] For **SERVO-DRIVE** power supply unit

20 Synchronisation cable[1]

Length (mm)	Colour	Part no.
80	WS	Z10K008S
500		Z10K050S
1200		Z10K120S
1600		Z10K160S

Consisting of:
20 1 x Synchronisation cable

[1] Connects two drive units that need to activate simultaneously

Accessories

– Cable holder[1]

Colour	Material	Part no.
WS	Nylon	Z10K0009

Consisting of:
– 1 x Cable holder

[1] E.g. for fixing the **SERVO-DRIVE** distribution cable

Colour		Colour	
SZ	Black	WGR	White grey
TGR	Dark grey	WS	White

Reference pages

Overview	463	More technical details	708	**Assembly, removal and adjustment**	
MOVENTO	410				
TANDEM	430				
Planning	482			Short URL	
Accessories	500			www.blum.com/a450	
Blum services	602				
Machine directive	711				

Two drawers with a continuous front

Planning

Cabinet

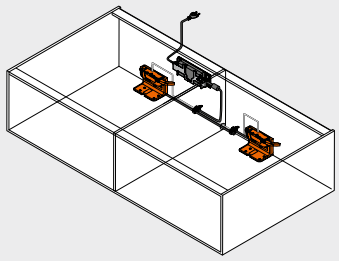

Base – attachment bracket 1 tier

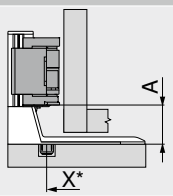

A	Distance between the bottom edge of the attachment bracket and the bottom edge of the drive unit
X	Drilling position
*	Measured from cabinet front edge

Runner systems	Drawer height SKH (mm)	Internal cabinet width LW (mm)
		≥ 429
		A (mm)
MOVENTO	≥ 79	35
TANDEM	≥ 79	35

A Distance between the bottom edge of the attachment bracket and the bottom edge of the drive unit

Base – attachment bracket 1 tier

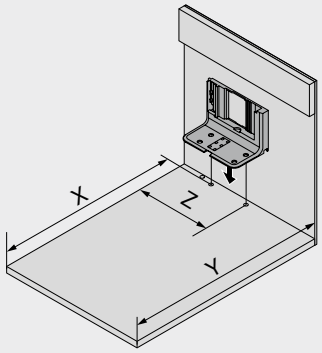

Drawer height SKH (mm)	X (mm)	Y (mm)	Z (mm)
≥ 79	NL + 16	NL + 30	LW / 2

LW	Internal cabinet width
NL	Nominal length
X	Drilling position
Y	Min. space requirement
Z	Dimension of engagement

Base – drilling pattern

Lower cabling

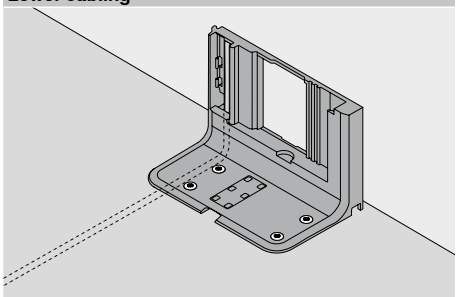

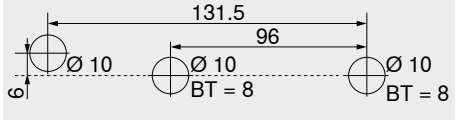

BT Drilling depth

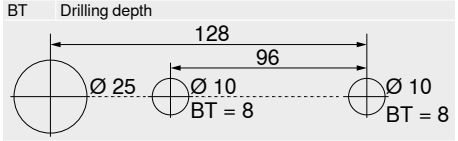

Alternative drilling pattern – **MINIPRESS top** | **MINIPRESS**

BT Drilling depth

Back cabling

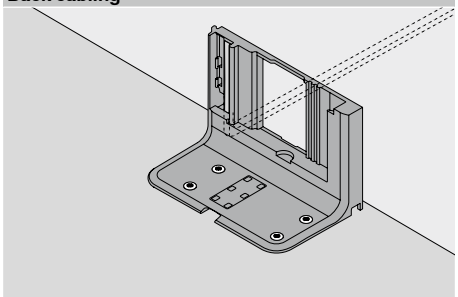

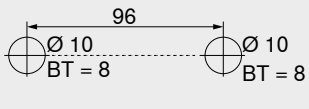

BT Drilling depth

Front assembly – position – Blum distance bumper

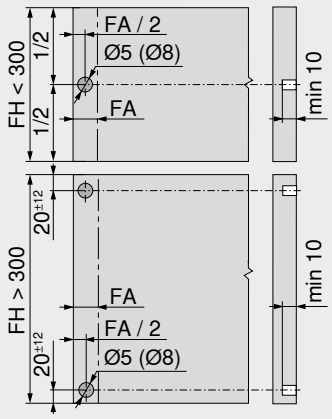

The Blum distance bumper creates and maintains the required trigger path of 2 mm

Front height FH (mm)	Blum distance bumper (pcs.)
Up to 300	2
Starting at 301	4

FA	Front overlay
FH	Front height

Two drawers with a continuous front

Planning

Space requirement and safety distance – power supply unit housing

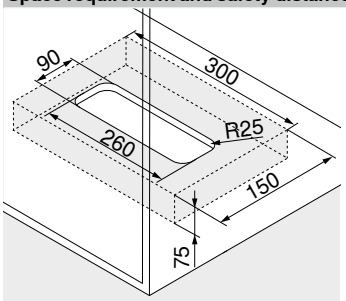

Mounting on the ground

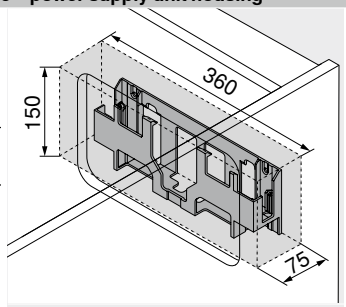

Wall fixing

Attention

Maintain a 30 mm safety distance from the bottom edge (base fixing) and/or front edge (wall fixing) and side edges of the power supply unit housing to the neighbouring elements!

Air must be able to circulate, otherwise the **SERVO-DRIVE** power supply unit could overheat!

Reference pages

Overview	463	Machine directive	711	**Assembly, removal and adjustment**	
MOVENTO	410	More technical details	708		
TANDEM	430				
Order information	480			Short URL	
Accessories	500			www.blum.com/a450	
Blum services	602				

Cabinet with different drawer depths | inner drawer



- Electrical opening support system in conjunction with **BLUMOTION** – for soft and effortless closing action
- With attachment bracket and horizontal bracket profile
- No fixed connection to the drive system
- Pull-outs can be used unchanged
- Quick assembly of pre-mounted parts

Cabling

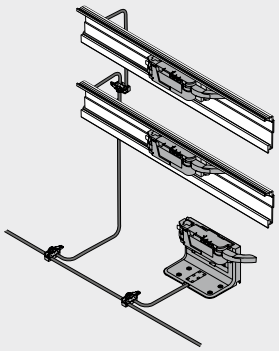

Order information

1a Blum distance bumper

	Diameter (mm)	Colour	Part no.
	Ø 5.0	TGR	993.0530
	Ø 8.0		993.0830.01

Front height FH (mm)	Blum distance bumper (pcs.)
Up to 300	2
Starting at 301	4

1b Blum distance bumper

	Runner systems	Diameter (mm)	Colour	Part no.
	TANDEM	Ø 10.0	TGR [1]	993.2000

[1] Adjustable Blum distance bumper for inner drawers and inset fronts with **TANDEM**

1b Depth adjustment left/right[1]

	Runner systems	Colour	Part no.
	MOVENTO	R7037	298.7600

[1] Only for inset applications
Integrated Blum distance bumper
Suitable for T51.7601 locking device

5 Attachment bracket 1 tier

	Colour	Material	Part no.
	TGR	Nylon	Z10D0311

Consisting of:
5 1 x Attachment bracket 1 tier

6 Bracket profile horizontal[2]

	Length (mm)[1]	Material	Part no.
	1143	Aluminium	Z10T1143B

Consisting of:
6 1 x Bracket profile horizontal
Cutting **6** Internal cabinet width LW – 19 mm
[1] For cutting to size
[2] For cabinet width KB 275–1200 mm

7 Horizontal bracket profile attachment[1]

	Colour	Material	Part no.
	TGR	Nylon	Z10D5210

Consisting of:
7a 1 x Bracket profile attachment left/right
7b 1 x Bracket profile adapter for drive unit
[1] Chipboard screws and system screws can be used

9 Drive unit

	Colour	Material	Part no.
	TGR	Nylon	Z10A3000.04

Consisting of:
9 1 x Drive unit
Incl. pre-assembled lever extension

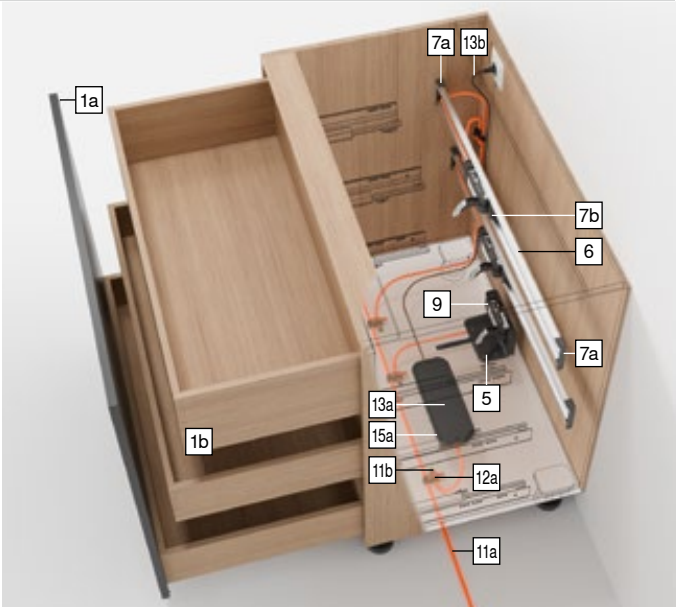

11 SERVO-DRIVE distribution cable set[2]

	Colour	Length (m)[1]	Part no.
	SZ	8	Z10K800AE

Consisting of:
11a 1 x **SERVO-DRIVE** distribution cable
11b 5 x Cable end protector
[1] For cutting to size
[2] Can be used as a distribution, bracket profile and communications cable

12 Connecting node set

	Colour	Material	Part no.
	SZ	Nylon	Z10V100E.01

Consisting of:
12a 1 x Connecting node
11b 2 x Cable end protector

Cabinet with different drawer depths | inner drawer

Order information

13 SERVO-DRIVE power supply unit and flex[4]

Colour: SZ

Mains plug	Market[1]	Language package[2]	Language[3]	Part no.
E	Europe	A	DE | EN | FR | IT | NL	Z10NE04EA
		B	DA | EN | FI | NO | SV	Z10NE04EB
		C	EL | EN | HR | SL | SR | TR	Z10NE04EC
		D	EN | ES | FR | IT | PT	Z10NE04ED
		E	CS | HU | PL | SK	Z10NE04EE
		F	BG | ET | LT | LV | RO | RU | UK	Z10NE04EF
		I	EN	Z10NE04EI
B	GB	A	DE | EN | FR | IT | NL	Z10NE04BA
		I	EN	Z10NE04BI
H	IN			Z10NE04HI
I	IL	A	DE | EN | FR | IT | NL	Z10NE04IA
K	AU	I	EN	Z10NE04KI
N	CN	H	EN | ZH | KO	Z10NE04NH
R	KR			Z10NE04RH
S	BR	K	EN | ES | PT	Z10NE04SK
T	TW	H	EN | ZH | KO	Z10NE04TH
U	US | CA	G	EN | ES | FR	Z10NE04UG
	JP	J	JA	Z10NE04UJ
Z	ZA	I	EN	Z10NE04ZI

Consisting of:

13a 1 x **SERVO-DRIVE** power supply unit
Output flex – length 2 m
Incl. operating and installation instructions

13b 1 x Flex
Length 1.5–1.8 m, incl. plug

[1] Market descriptions as per ISO 3166
[2] Language package – operating instructions
[3] Language descriptions as per ISO 639
[4] Required for two or more drive units

15a Power supply unit housing – mounting on the ground[1]

Colour	Material	Part no.
TGR	Nylon	Z10NG000

Consisting of:

15a 1 x Power supply unit housing – mounting on the ground
Incl. cover

[1] For **SERVO-DRIVE** power supply unit

Alternative to 15a

15b Power supply unit housing – wall fixing[1]

Colour	Material	Part no.
WGR	Nylon	Z10NG120

Consisting of:

15b 1 x Power supply unit housing – wall fixing

[1] For **SERVO-DRIVE** power supply unit

Accessories

– Cable holder[1]

Colour	Material	Part no.
WS	Nylon	Z10K0009

Consisting of:

– 1 x Cable holder

[1] E.g. for fixing the **SERVO-DRIVE** distribution cable

Colour		Colour	
R7037	RAL 7037 dust grey	WGR	White grey
SZ	Black	WS	White
TGR	Dark grey		

4

Reference pages

Overview	463	Machine directive	711	**Assembly, removal and adjustment**	
MOVENTO	410	More technical details	708		
TANDEM	430				
Planning – bracket profile horizontal	486			Short URL	
Planning – attachment bracket 1 tier	488			www.blum.com/a450	
Accessories	500				
Blum services	602				

Cabinet with different drawer depths | inner drawer

Planning – bracket profile horizontal

Cabinet

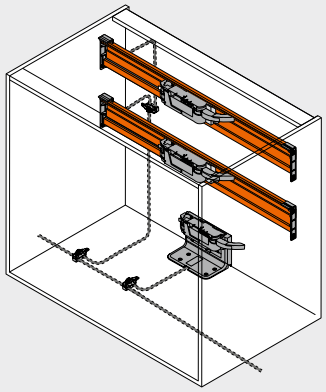

Position – drive unit

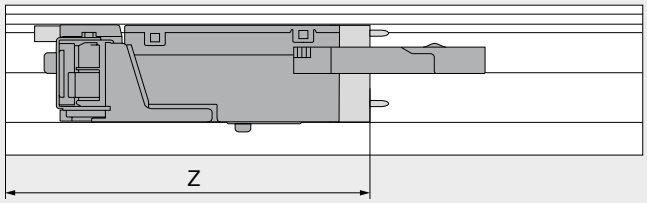

Z Dimension of engagement

Position – drive unit

Runner systems	Drawer height SKH (mm)	Internal cabinet width LW (mm)							
		224–234		235–388		389–428		≥ 429	
		Z (mm)	Lever extension	Z (mm)	Lever extension	Z (mm)	Lever extension	Z (mm)	Lever extension
MOVENTO	≥ 79	167	–	167	●	167	●	LW / 2	●
TANDEM	≥ 79	167	–	167	●	LW / 2	●	LW / 2	●

LW Internal cabinet width
Z Dimension of engagement

● Required
– Not possible

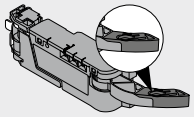

Lever extension

Front assembly – position – Blum distance bumper

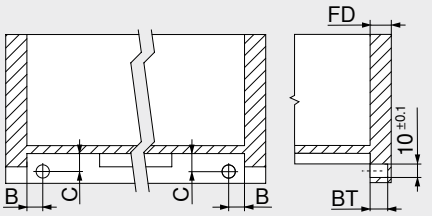

TANDEM
Inner drawer
The Blum distance bumper creates and maintains the required trigger path of 2 mm

Runners	Pull-out type	B (mm)	C (mm)
56xH | 56xF	Full extension	16.5 ±1	12.0 ±1
55xH | 55xF	Single extension	18.5 ±0.5	13.5 ±0.5

Front thickness FD (mm)	Drilling depth BT (mm)	Adjustment range (mm)
13.0	10.0	+1.75 / –0.25
Starting at 14.5	11.5	±1.75

Cabinet with different drawer depths | inner drawer

Planning – bracket profile horizontal

Drilling distances

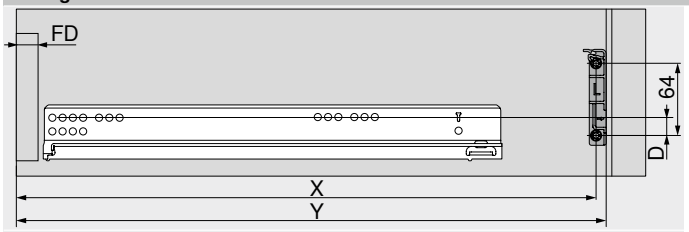

MOVENTO

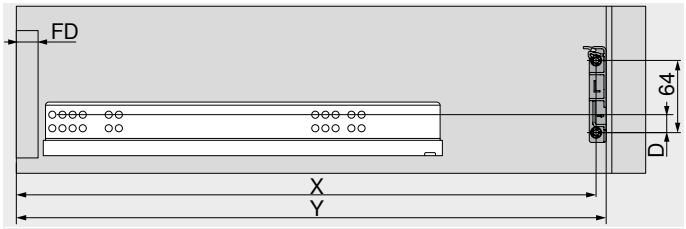

TANDEM

Drawer height SKH (mm)	X (mm)	Y (mm)
≥ 79	NL + FD + 26	NL + FD + 36

FD	Front thickness
NL	Nominal length
X	Drilling position
Y	Min. space requirement

Runner systems	Drawer height SKH (mm)	Internal cabinet width LW (mm)	
		224–428	≥ 429
		D (mm)	D (mm)
MOVENTO	≥ 79	–5	19
TANDEM	≥ 79	–5	19

D	Distance from cabinet profile fixing position to bracket profile attachment fixing position

Reference pages

Overview	463	Blum services	602	**Assembly, removal and adjustment**	
MOVENTO	410	Machine directive	711		
TANDEM	430	More technical details	708		
Order information	484			Short URL	
Planning – attachment bracket 1 tier	488			www.blum.com/a450	
Accessories	500				

Cabinet with different drawer depths | inner drawer

Planning – attachment bracket 1 tier

Cabinet

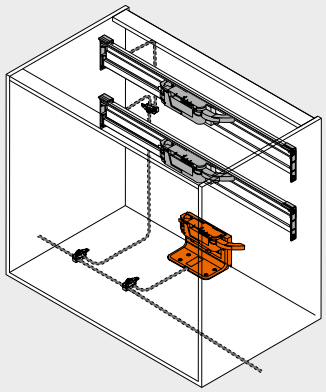

Base – attachment bracket 1 tier

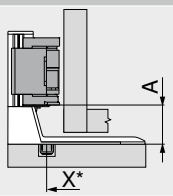

A	Distance between the bottom edge of the attachment bracket and the bottom edge of the drive unit
X	Drilling position
*	Measured from cabinet front edge

Runner systems	Drawer height SKH (mm)	Internal cabinet width LW (mm)
		≥ 429
		A (mm)
MOVENTO	≥ 79	35
TANDEM	≥ 79	35

A Distance between the bottom edge of the attachment bracket and the bottom edge of the drive unit

Base – attachment bracket 1 tier

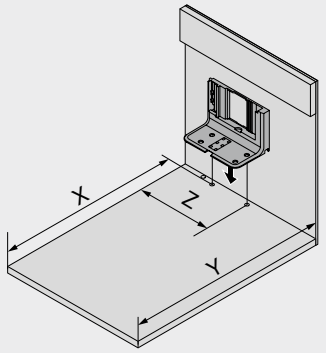

Drawer height SKH (mm)	X (mm)	Y (mm)	Z (mm)
≥ 79	NL + 16	NL + 30	LW / 2

LW	Internal cabinet width
NL	Nominal length
X	Drilling position
Y	Min. space requirement
Z	Dimension of engagement

Base – drilling pattern

Lower cabling

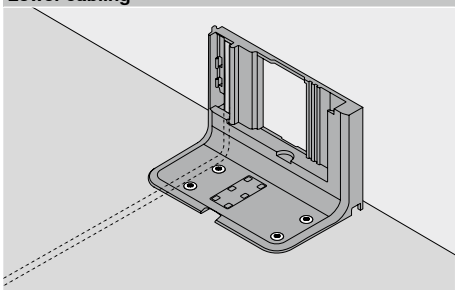

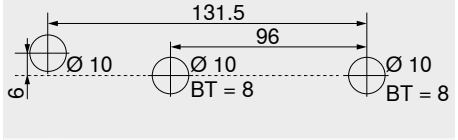

BT Drilling depth

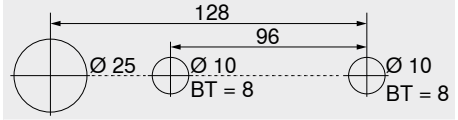

Alternative drilling pattern – **MINIPRESS top** | **MINIPRESS**

BT Drilling depth

Back cabling

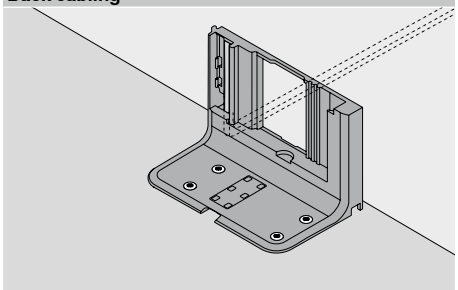

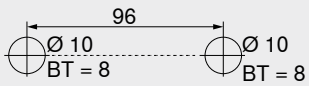

BT Drilling depth

Cabinet with different drawer depths | inner drawer

Planning

Space requirement and safety distance – power supply unit housing

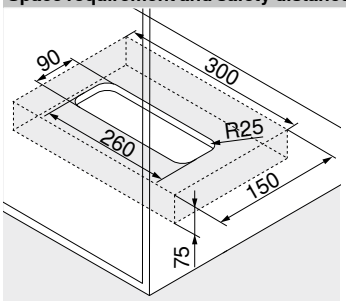

Mounting on the ground

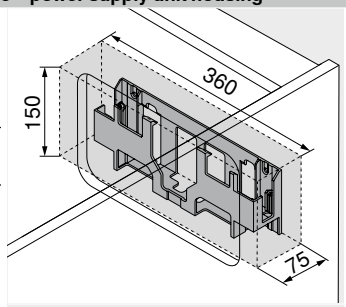

Wall fixing

Attention

Maintain a 30 mm safety distance from the bottom edge (base fixing) and/or front edge (wall fixing) and side edges of the power supply unit housing to the neighbouring elements!

Air must be able to circulate, otherwise the **SERVO-DRIVE** power supply unit could overheat!

4

Reference pages

Overview	463	Blum services	602	**Assembly, removal and adjustment**	
MOVENTO	410	Machine directive	711		
TANDEM	430	More technical details	708		
Order information	484			Short URL	
Planning – bracket profile horizontal	486			www.blum.com/a450	
Accessories	500				

Cabinet with individual drawer



- Electrical opening support system in conjunction with **BLUMOTION** – for soft and effortless closing action
- With upper attachment bracket
- No fixed connection to the drive system
- Pull-outs can be used unchanged
- Quick assembly of pre-mounted parts

Cabling

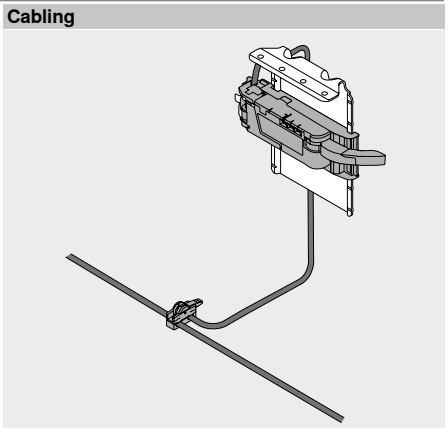

Order information

1a		Blum distance bumper		
		Diameter (mm)	Colour	Part no.
		Ø 5.0	TGR	993.0530
		Ø 8.0		993.0830.01

Front height FH (mm)	Blum distance bumper (pcs.)
Up to 300	2
Starting at 301	4

8		Upper attachment bracket		
		Colour	Material	Part no.
		TGR	Steel	Z10D6252

Consisting of:

8	1 x	Upper attachment bracket Incl. pre-mounted adapter for the drive unit

9		Drive unit		
		Colour	Material	Part no.
		TGR	Nylon	Z10A3000.04

Consisting of:

9	1 x	Drive unit Incl. pre-assembled lever extension

11		SERVO-DRIVE distribution cable set[2]		
		Colour	Length (m)[1]	Part no.
		SZ	8	Z10K800AE

Consisting of:

11a	1 x	**SERVO-DRIVE** distribution cable
11b	5 x	Cable end protector

[1] For cutting to size

[2] Can be used as a distribution, bracket profile and communications cable

12		Connecting node set		
		Colour	Material	Part no.
		SZ	Nylon	Z10V100E.01

Consisting of:

12a	1 x	Connecting node
11b	2 x	Cable end protector

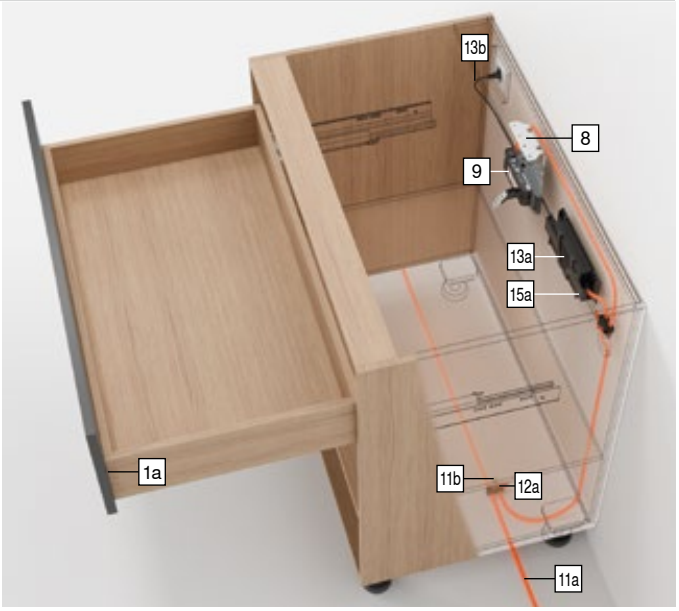

Cabinet with individual drawer

Order information

13	SERVO-DRIVE power supply unit and flex[4]				
	Colour			SZ	
	Mains plug	Market[1]	Language package[2]	Language[3]	Part no.
	E	Europe	A	DE | EN | FR | IT | NL	Z10NE04EA
			B	DA | EN | FI | NO | SV	Z10NE04EB
			C	EL | EN | HR | SL | SR | TR	Z10NE04EC
			D	EN | ES | FR | IT | PT	Z10NE04ED
			E	CS | HU | PL | SK	Z10NE04EE
			F	BG | ET | LT | LV | RO | RU | UK	Z10NE04EF
			I	EN	Z10NE04EI
	B	GB	A	DE | EN | FR | IT | NL	Z10NE04BA
			I	EN	Z10NE04BI
	H	IN			Z10NE04HI
	I	IL	A	DE | EN | FR | IT | NL	Z10NE04IA
	K	AU	I	EN	Z10NE04KI
	N	CN	H	EN | ZH | KO	Z10NE04NH
	R	KR			Z10NE04RH
	S	BR	K	EN | ES | PT	Z10NE04SK
	T	TW	H	EN | ZH | KO	Z10NE04TH
	U	US | CA	G	EN | ES | FR	Z10NE04UG
		JP	J	JA	Z10NE04UJ
	Z	ZA	I	EN	Z10NE04ZI

Consisting of:

13a 1 x **SERVO-DRIVE** power supply unit
Output flex – length 2 m
Incl. operating and installation instructions

13b 1 x Flex
Length 1.5–1.8 m, incl. plug

[1] Market descriptions as per ISO 3166
[2] Language package – operating instructions
[3] Language descriptions as per ISO 639
[4] Required for two or more drive units

15a	Power supply unit housing – mounting on the ground[1]		
	Colour	Material	Part no.
	TGR	Nylon	Z10NG000

Consisting of:

15a 1 x Power supply unit housing – mounting on the ground
Incl. cover

[1] For **SERVO-DRIVE** power supply unit

Alternative to 15a

15b	Power supply unit housing – wall fixing[1]		
	Colour	Material	Part no.
	WGR	Nylon	Z10NG120

Consisting of:

15b 1 x Power supply unit housing – wall fixing

[1] For **SERVO-DRIVE** power supply unit

Accessories

–	Cable holder[1]		
	Colour	Material	Part no.
	WS	Nylon	Z10K0009

Consisting of:

– 1 x Cable holder

[1] E.g. for fixing the **SERVO-DRIVE** distribution cable

Colour		Colour	
SZ	Black	WGR	White grey
TGR	Dark grey	WS	White

4

Reference pages

Overview	463	More technical details	708	**Assembly, removal and adjustment**	
MOVENTO	410				
TANDEM	430				
Planning	492			Short URL	
Accessories	500			www.blum.com/a450	
Blum services	602				
Machine directive	711				

Cabinet with individual drawer

Planning

Cabinet

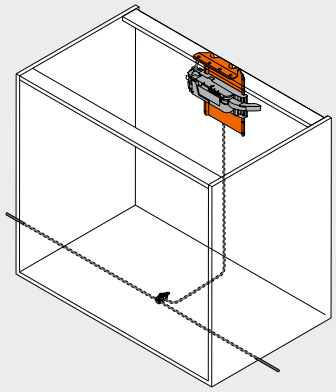

Position – drive unit

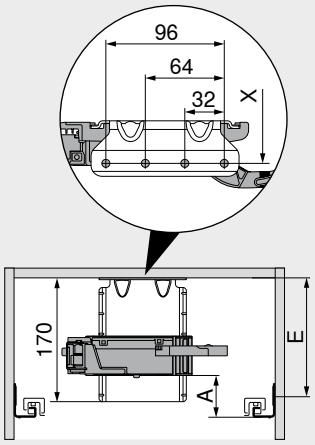

A	Distance between the bottom edge of the cabinet profile and the bottom edge of the drive unit
E	Distance between the bottom edge of the cabinet top panel and the fixing position of the runner
X	Drilling position

The cross bar must be connected to the work plate to make it secure

Position – drive unit

Runner systems	Drawer height SKH (mm)	Internal cabinet width LW (mm)								
		224–234			235–428			≥ 429		
		A (mm)	E min. (mm)	E max. (mm)	A (mm)	E min. (mm)	E max. (mm)	A (mm)	E min. (mm)	E max. (mm)
MOVENTO	≥ 79	–	–	–	60	100	190	35	75	165
TANDEM	≥ 79	55	96	187	55	96	187	35	75	167
A	Distance between the bottom edge of the cabinet profile and the bottom edge of the drive unit	–	Not possible							
E	Distance between the bottom edge of the cabinet top panel and the fixing position of the runner									

Front assembly – position – Blum distance bumper

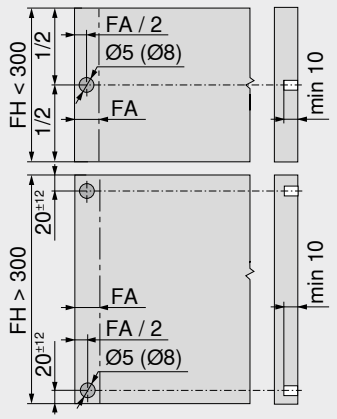

The Blum distance bumper creates and maintains the required trigger path of 2 mm

Front height FH (mm)	Blum distance bumper (pcs.)
Up to 300	2
Starting at 301	4

FA	Front overlay
FH	Front height

Cabinet with individual drawer

Planning

Drilling distances

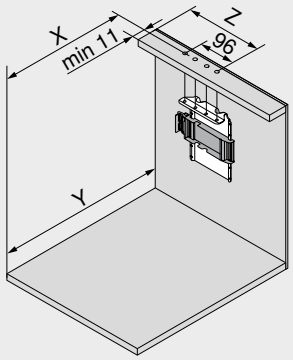

Drawer height SKH (mm)	X (mm)	Y (mm)
≥ 79	NL – 5	NL + 30

NL	Nominal length
X	Drilling position
Y	Min. space requirement

Runner systems	Drawer height SKH (mm)	Internal cabinet width LW (mm)							
		224–234		235–388		389–428		≥ 429	
		Z (mm)	Lever extension	Z (mm)	Lever extension	Z (mm)	Lever extension	Z (mm)	Lever extension
MOVENTO	≥ 79	–	–	164	●	164	●	LW / 2	●
TANDEM	≥ 79	164	–	164	●	LW / 2	●	LW / 2	●

LW	Internal cabinet width	●	Required
Z	Dimension of engagement	–	Not possible

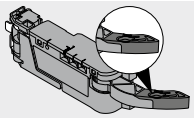

Lever extension

Space requirement and safety distance – power supply unit housing

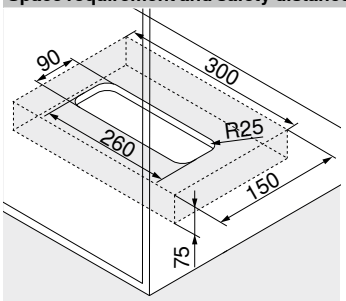

Mounting on the ground

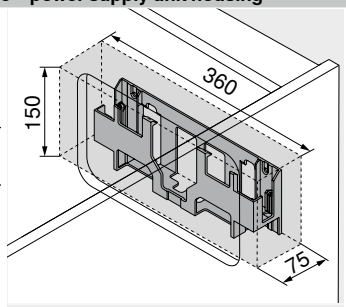

Wall fixing

Attention

Maintain a 30 mm safety distance from the bottom edge (base fixing) and/or front edge (wall fixing) and side edges of the power supply unit housing to the neighbouring elements!

Air must be able to circulate, otherwise the **SERVO-DRIVE** power supply unit could overheat!

Reference pages

Overview	463	Machine directive	711	**Assembly, removal and adjustment**	
MOVENTO	410	More technical details	708		
TANDEM	430				
Order information	490			Short URL	
Accessories	500			www.blum.com/a450	
Blum services	602				

Cabinet with inset fronts



- Electrical opening support system in conjunction with **BLUMOTION** – for soft and effortless closing action
- With vertical bracket profile
- No fixed connection to the drive system
- Pull-outs can be used unchanged
- Tool-free drive unit assembly
- Simple cabling

Cabling

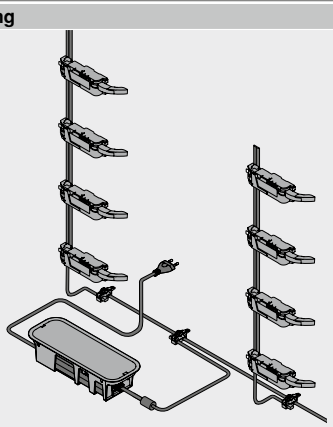

Order information

1b	Blum distance bumper			
	Runner systems	**Diameter (mm)**	**Colour**	**Part no.**
	TANDEM	Ø 10.0	TGR [1]	**993.2000**

[1] Adjustable Blum distance bumper for inner drawers and inset fronts with **TANDEM**

1b	Depth adjustment left/right[1]		
	Runner systems	**Colour**	**Part no.**
	MOVENTO	R7037	**298.7600**

[1] Only for inset applications
Integrated Blum distance bumper
Suitable for T51.7601 locking device

2	Bracket profile			
	Length (mm)[1]	**Material**	**Cable**	**Part no.**
	650	Aluminium	With cable	**Z10T650AA**
	700			**Z10T700AA**
	710			**Z10T710AA**
	750			**Z10T750AA**
	800			**Z10T800AA**
	1170		Without cable	**Z10T1170A**

Consisting of:
2 1 x Bracket profile
Cutting **2** Internal cabinet height LH – 10 mm
[1] For cutting to size

3a	Bracket profile attachment top/bottom – cross bar construction horizontal		
	Colour	**Material**	**Part no.**
	TGR	Nylon	**Z10D01E0.01**

Consisting of:
3a 1 x Bracket profile attachment top/bottom

Alternative to 3a

3b	Bracket profile attachment lower/back – cross bar construction vertical		
	Colour	**Material**	**Part no.**
	TGR	Nylon	**Z10D01EA.01**

Consisting of:
3b 1 x Bracket profile attachment lower/back
– 1 x Bracket profile cover cap

9	Drive unit		
	Colour	**Material**	**Part no.**
	TGR	Nylon	**Z10A3000.04**

Consisting of:
9 1 x Drive unit
Incl. pre-assembled lever extension

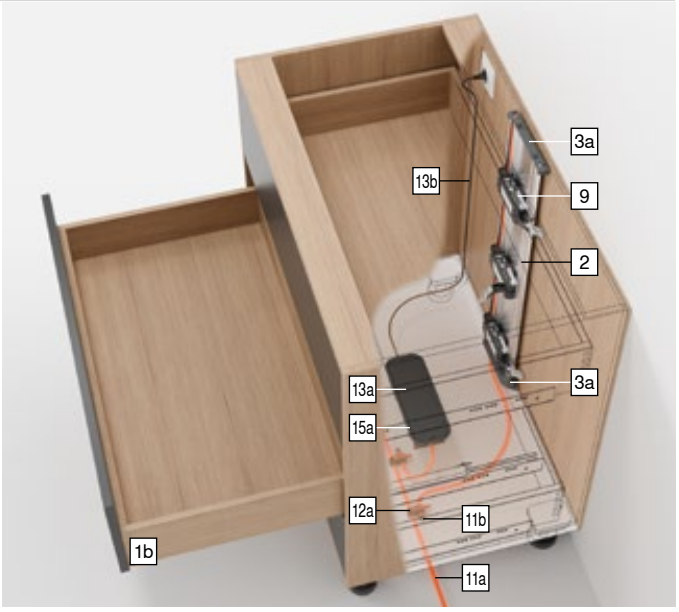

11	SERVO-DRIVE distribution cable set[2]		
	Colour	**Length (m)[1]**	**Part no.**
	SZ	8	**Z10K800AE**

Consisting of:
11a 1 x **SERVO-DRIVE** distribution cable
11b 5 x Cable end protector
[1] For cutting to size
[2] Can be used as a distribution, bracket profile and communications cable

12	Connecting node set		
	Colour	**Material**	**Part no.**
	SZ	Nylon	**Z10V100E.01**

Consisting of:
12a 1 x Connecting node
11b 2 x Cable end protector

Cabinet with inset fronts

Order information

13 SERVO-DRIVE power supply unit and flex[4]

Colour: SZ

Mains plug	Market[1]	Language package[2]	Language[3]	Part no.
E	Europe	A	DE | EN | FR | IT | NL	Z10NE04EA
		B	DA | EN | FI | NO | SV	Z10NE04EB
		C	EL | EN | HR | SL | SR | TR	Z10NE04EC
		D	EN | ES | FR | IT | PT	Z10NE04ED
		E	CS | HU | PL | SK	Z10NE04EE
		F	BG | ET | LT | LV | RO | RU | UK	Z10NE04EF
		I	EN	Z10NE04EI
B	GB	A	DE | EN | FR | IT | NL	Z10NE04BA
		I	EN	Z10NE04BI
H	IN			Z10NE04HI
I	IL	A	DE | EN | FR | IT | NL	Z10NE04IA
K	AU	I	EN	Z10NE04KI
N	CN	H	EN | ZH | KO	Z10NE04NH
R	KR			Z10NE04RH
S	BR	K	EN | ES | PT	Z10NE04SK
T	TW	H	EN | ZH | KO	Z10NE04TH
U	US | CA	G	EN | ES | FR	Z10NE04UG
	JP	J	JA	Z10NE04UJ
Z	ZA	I	EN	Z10NE04ZI

Consisting of:

13a 1 x **SERVO-DRIVE** power supply unit
Output flex – length 2 m
Incl. operating and installation instructions

13b 1 x Flex
Length 1.5–1.8 m, incl. plug

[1] Market descriptions as per ISO 3166
[2] Language package – operating instructions
[3] Language descriptions as per ISO 639
[4] Required for two or more drive units

15a Power supply unit housing – mounting on the ground[1]

Colour	Material	Part no.
TGR	Nylon	Z10NG000

Consisting of:

15a 1 x Power supply unit housing – mounting on the ground
Incl. cover

[1] For **SERVO-DRIVE** power supply unit

Alternative to 15a

15b Power supply unit housing – wall fixing[1]

Colour	Material	Part no.
WGR	Nylon	Z10NG120

Consisting of:

15b 1 x Power supply unit housing – wall fixing

[1] For **SERVO-DRIVE** power supply unit

Accessories

– Cable holder[1]

Colour	Material	Part no.
WS	Nylon	Z10K0009

Consisting of:

– 1 x Cable holder

[1] E.g. for fixing the **SERVO-DRIVE** distribution cable

Colour		Colour	
R7037	RAL 7037 dust grey	WGR	White grey
SZ	Black	WS	White
TGR	Dark grey		

4

Reference pages

Overview	463	More technical details	708	**Assembly, removal and adjustment**	
MOVENTO	410				
TANDEM	430				
Planning	496			Short URL	
Accessories	500			www.blum.com/a450	
Blum services	602				
Machine directive	711				

Cabinet with inset fronts

Planning

Cabinet

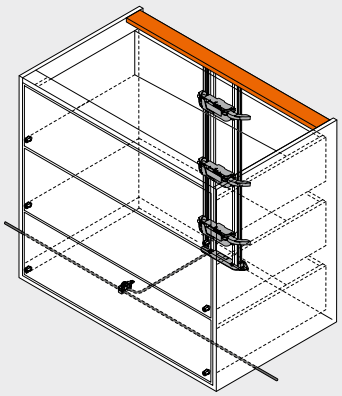

Position – drive unit

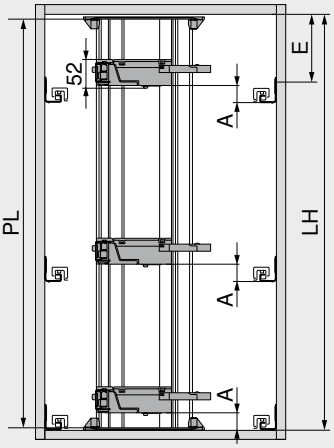

PL = LH – 10 mm
Round down to the nearest tenth

LH	Internal cabinet height
PL	Bracket profile length

Position – drive unit

Runner systems	Drawer height SKH (mm)	Internal cabinet width LW (mm)					
		224–234		235–428		≥ 429	
		A (mm)	E min. (mm)	A (mm)	E min. (mm)	A (mm)	E min. (mm)
MOVENTO	≥ 79	–	–	60	74	35	49
TANDEM	≥ 79	55	71	55	71	35	51

A	Distance between the bottom edge of the cabinet profile and the bottom edge of the drive unit	– Not possible
E	Distance between the bottom edge of the cabinet top panel and the fixing position of the runner	

Base – drilling pattern

Lower cabling

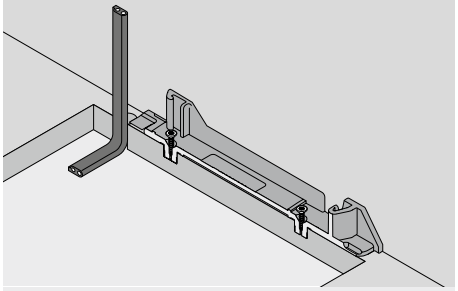

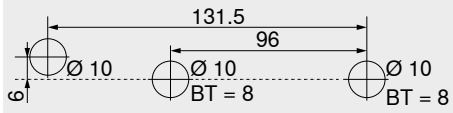

BT Drilling depth

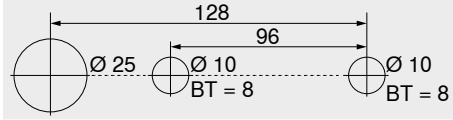

Alternative drilling pattern – **MINIPRESS top** | **MINIPRESS**

BT Drilling depth

Back cabling

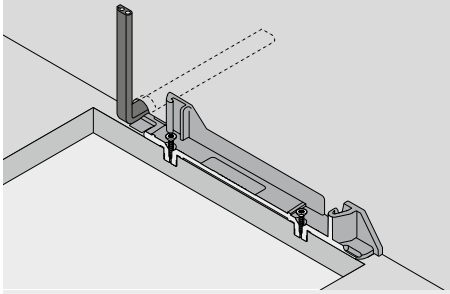

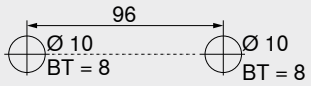

BT Drilling depth

Front assembly – position – Blum distance bumper

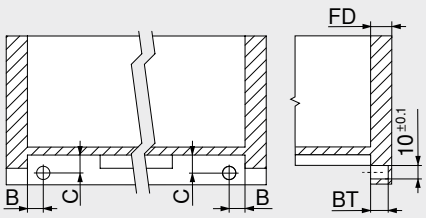

TANDEM
Inner drawer
The Blum distance bumper creates and maintains the required trigger path of 2 mm

Runners	Pull-out type	B (mm)	C (mm)
56xH | 56xF	Full extension	16.5 ±1	12.0 ±1
55xH | 55xF	Single extension	18.5 ±0.5	13.5 ±0.5

Front thickness FD (mm)	Drilling depth BT (mm)	Adjustment range (mm)
13.0	10.0	+1.75 / –0.25
Starting at 14.5	11.5	±1.75

Cabinet with inset fronts

Planning

Drilling distances – base | cross bar

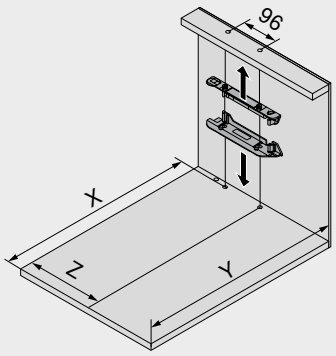

Drawer height SKH (mm)	X (mm)	Y (mm)
≥ 79	NL + FD + 18	NL + FD + 34

FD	Front thickness
NL	Nominal length
X	Drilling position
Y	Min. space requirement

Runner systems	Drawer height SKH (mm)	Internal cabinet width LW (mm)							
		224–234		235–388		389–428		≥ 429	
		Z (mm)	Lever extension	Z (mm)	Lever extension	Z (mm)	Lever extension	Z (mm)	Lever extension
MOVENTO	≥ 79	–	–	164	●	164	●	LW / 2	●
TANDEM	≥ 79	164	–	164	●	LW / 2	●	LW / 2	●

LW	Internal cabinet width
Z	Dimension of engagement

●	Required
–	Not possible

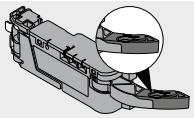

Lever extension

Space requirement and safety distance – power supply unit housing

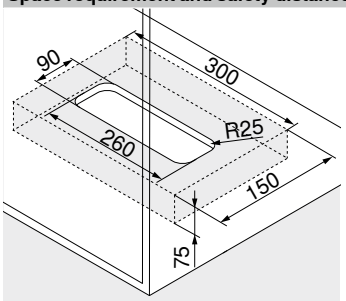

Mounting on the ground

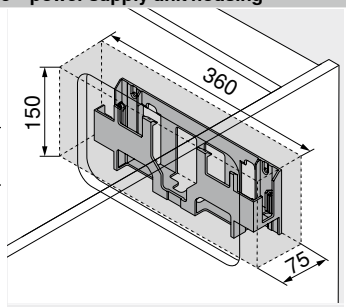

Wall fixing

Attention

Maintain a 30 mm safety distance from the bottom edge (base fixing) and/or front edge (wall fixing) and side edges of the power supply unit housing to the neighbouring elements!

Air must be able to circulate, otherwise the **SERVO-DRIVE** power supply unit could overheat!

Reference pages

Overview	463	Machine directive	711	**Assembly, removal and adjustment**	
MOVENTO	410	More technical details	708		
TANDEM	430				
Order information	494			Short URL	
Accessories	500			www.blum.com/a450	
Blum services	602				

SERVO-DRIVE uno for bottom mount waste bin solutions

Web code – click on the code or enter it in the Product Configurator DQE7FY



- Electrical opening support system in conjunction with **BLUMOTION** – for soft and effortless closing action
- Suitable for individual applications
- For bottom mount waste bin solutions
- Also ideal for retrofitting
- No fixed connection to the drive system
- Pull-outs can be used unchanged
- Simple and quick assembly of pre-mounted parts

SERVO-DRIVE uno set



Order information

18		SERVO-DRIVE uno set[1]				
		Colour			TGR	
	Network adapter[2]	Market[3]		Language package[4]	Language[5]	Part no.
	E	Europe		A	DE | EN | FR | IT | NL	Z10UB00EA
				B	DA | EN | FI | NO | SV	Z10UB00EB
				C	EL | EN | HR | SL | SR | TR	Z10UB00EC
				D	EN | ES | FR | IT | PT	Z10UB00ED
				E	CS | HU | PL | SK	Z10UB00EE
				F	BG | ET | LT | LV | RO | RU | UK	Z10UB00EF
	B	GB		A	DE | EN | FR | IT | NL	Z10UB00BA
				I	EN	Z10UB00BI
	K	AU		I	EN	Z10UB00KI
	N	CN		H	EN | ZH | KO	Z10UB00NH
	U	US | CA		G	EN | ES | FR	Z10UB00UG
		JP		J	JA	Z10UB00UJ

Consisting of:

1	2 x	Blum distance bumper
5	1 x	Attachment bracket 1 tier
9	1 x	Drive unit
9a	1 x	Drip protection feature
18a	1 x	Transport protection
18c	1 x	**SERVO-DRIVE** plug-in power supply unit Incl. operating and installation instructions
18d	1 x	Assembly device
–	7 x	Screws for Blum distance bumper and attachment bracket

[1] Set pre-mounted
Other combinations available upon request
[2] See the Information chapter for a detailed market list
[3] Market descriptions as per ISO 3166
[4] Language package – operating instructions
[5] Language descriptions as per ISO 639

Colour	
TGR	Dark grey

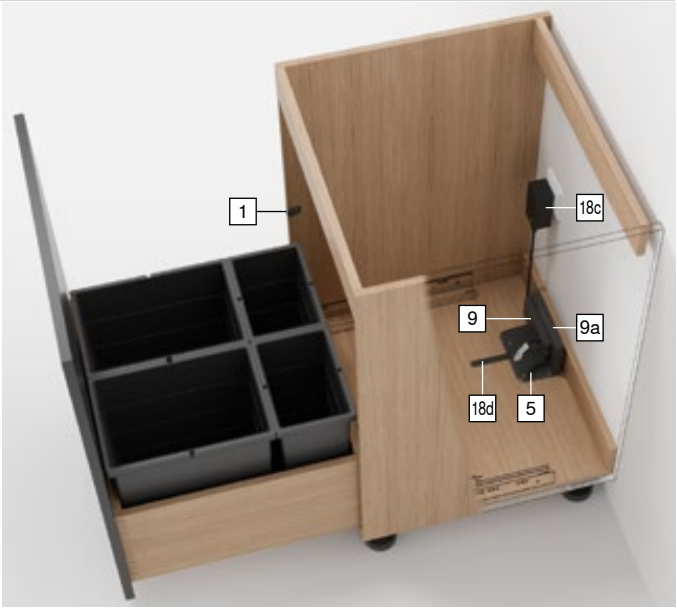

SERVO-DRIVE uno for bottom mount waste bin solutions

Web code – click on the code or enter it in the Product Configurator: DQE7FY

Planning

Cabinet

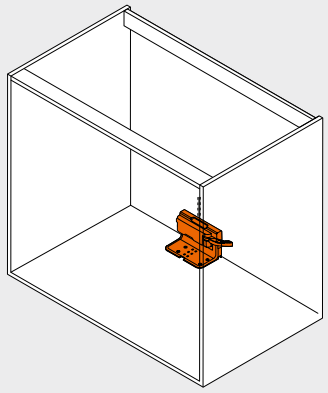

Position – drive unit

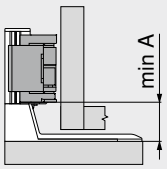

Runner systems	Internal cabinet width LW (mm)
	≥ 429
	A (mm)
MOVENTO	35
TANDEM	35

A Distance between the bottom edge of the attachment bracket and the bottom edge of the drive unit

Drilling distances – base

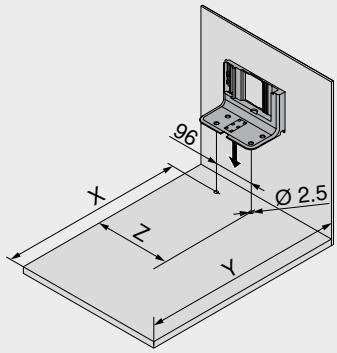

Runner systems	Internal cabinet width LW (mm)		
	≥ 429		
	X (mm)	Y (mm)	Z (mm)
MOVENTO	NL – 48	NL + 30	LW / 2
TANDEM	NL – 48	NL + 30	LW / 2

NL Nominal length
X Drilling position
Y Min. space requirement
Z Dimension of engagement

Position – Blum distance bumper

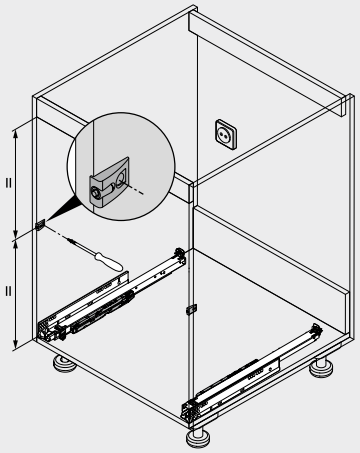

The Blum distance bumper creates and maintains the required trigger path of 2 mm

Reference pages

Overview	463	More technical details	708	**Assembly, removal and adjustment**	
MOVENTO	410				
TANDEM	430			Short URL	
SERVO-DRIVE uno – market list	732			www.blum.com/a450	
Blum services	602				
Machine directive	711				

Cable holder



- For example, for securing the distribution cable

Order information		
Colour	**Material**	**Part no.**
White	Nylon	Z10K0009

Synchronisation cable



- Connects two drive units that need to activate simultaneously

Order information		
Length (mm)	**Colour**	**Part no.**
80	White	Z10K008S
500		Z10K050S
1200		Z10K120S
1600		Z10K160S

Two functions – fascinatingly combined



TIP-ON BLUMOTION for **MOVENTO** combines the advantages of the **TIP-ON** mechanical opening support system with the reliable **BLUMOTION** soft-close mechanism for soft and effortless closing – 100 % mechanically.

TIP-ON BLUMOTION's extensive trigger range provides inspirational ease of use for handle-less pull-outs and drawers. To optimise the function and increase the trigger range, we generally recommend using synchronisation.





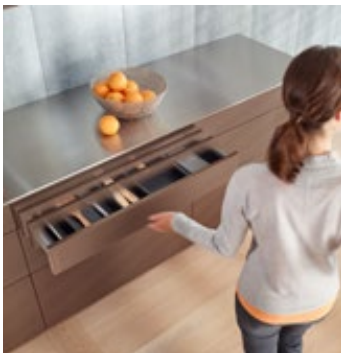

Opens with just a light touch, has a smooth running action and closes silently and effortlessly – experience completely harmonious and convenient motion with **TIP-ON BLUMOTION** technology.



The motion is assisted 100 % mechanically.

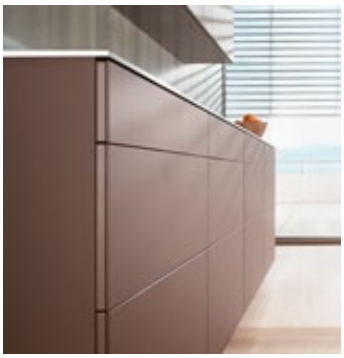

Small front gap
TIP-ON BLUMOTION can be adjusted to have a small front gap of 2.5 mm.

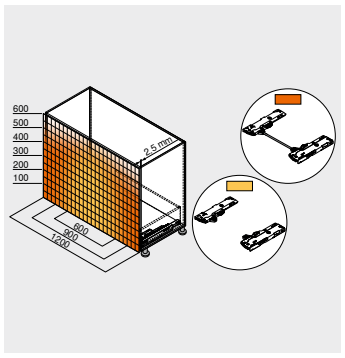

Extensive trigger range
To optimise the function and increase the trigger range, we generally recommend using synchronisation.



Four-dimensional adjustment
The four-dimensional adjustment ensures a precise gap layout. Depth adjustment is integrated and tool-free – simply turn the adjustment wheel.



Simple, tool-free assembly
The **TIP-ON BLUMOTION** unit can be assembled tool-free, as can all the other components.

Runner systems


Symbolic image

Runner systems	408
MOVENTO	410
SERVO-DRIVE for **MOVENTO** | **TANDEM**	462
TIP-ON for **MOVENTO** | **TANDEM**	506

Applications	kg	Web code	Page
Locking device feature			
MOVENTO with **TIP-ON BLUMOTION** – 760H | 766H	40 60 70	DQD0IM	504

kg Dynamic carrying capacity

Accessories


Symbolic image

Pull-out shelf lock	420	Gallery rail for pull-out shelf corner connectors	424
Side stabilisation set	422	Lock-open stop	425
Depth adjustment	422	Screws	426
Longside gallery rail with chipboard back fixing	423	Centre bit	426
Fixing bracket for pull-out shelf	423	Door buffer	426
Corner connectors	424	Screwdriver	427

Attachment of runners

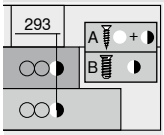

Symbolic image

Runner – 760H – 40 kg	428
Runner – 766H – 60 | 70 kg	428

Assembly, removal and adjustment

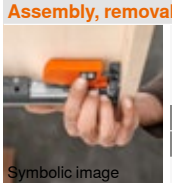
Symbolic image

Assembly, removal and adjustment

Short URL
www.blum.com/a460

Pictograph

	Item available on request
	Web code – click on the code or enter it in the Product Configurator

MOVENTO with TIP-ON BLUMOTION – 760H | 766H

Web code – click on the code or enter it in the Product Configurator: DQD0IM



- Concealed full extension
- Includes integrated, switchable **BLUMOTION S** for soft and effortless closing, and can be combined with **SERVO-DRIVE**, the electrical opening support system, or **TIP-ON BLUMOTION**, the mechanical opening support system
- Synchronised feather-light glide
- Tool-free side, height, and tilt adjustment
- Integrated tool-free depth adjustment
- Built-in width and depth tolerance compensation
- Compatible with the side stabilisation for **MOVENTO**
- Synchronisation for internal cabinet widths LW of 265 mm and wider

Space requirement

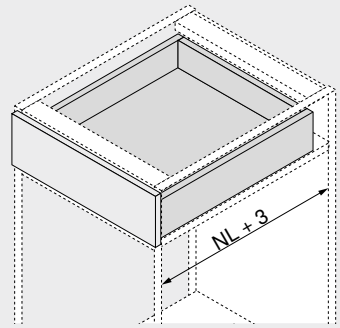

NL Nominal length

Order information

1 Runners left/right

Version	BLUMOTION S		
Nominal length NL (mm)	Dynamic carrying capacity (kg) 40	60	70
270	760H2700S		
300	760H3000S		
320	760H3200S		
350	760H3500S		
380	760H3800S		
400	760H4000S		
420	760H4200S		
450	760H4500S		766H4500S
480	760H4800S		
500	760H5000S		766H5000S
520	760H5200S		766H5200S
550	760H5500S		766H5500S
580			766H5800S
600	760H6000S		766H6000S
650			766H6500S
700		766H7000S	
750		766H7500S	

3 Locking device

Colour	Material		Part no.
Orange	Nylon/steel	1	T51.7601

1 Order left/right

6 TIP-ON BLUMOTION set

Nominal length NL (mm)	Unit	Runner (kg)	Weight (kg)[1]	Part no.
270–320	S0	40	≤ 10	T60L7040
	S1		> 10–20	T60L7140
350–600	L1		≤ 20[2]	T60L7340
	L3		15–40[2]	T60L7540
450–750	L5	60 | 70	35–70[3]	T60L7570

Consisting of:
6a 1 x **TIP-ON BLUMOTION** unit left/right
6b 1 x **TIP-ON BLUMOTION** latch left/right
6e 2 x **TIP-ON BLUMOTION** synchronisation adapter Internal cabinet width LW ≥ 314 mm

1 Recommended weight ranges (total weight of the pull-out) for an optimum opening and closing function
2 Can only be combined with a 40 kg cabinet profile
3 Recommendation: only use in combination with 60 | 70 kg runner

6f TIP-ON BLUMOTION synchronisation linkage[1]

Version	Colour	Part no.
Round	Grey	T60.1125W

Cutting **6f** Internal cabinet width LW – 267 mm

1 In combination with 6e 2 x T60.000D
For cutting to size
Suitable up to internal cabinet width LW 1392 mm
To optimise the function and increase the trigger range, we generally recommend using synchronisation

Drawer

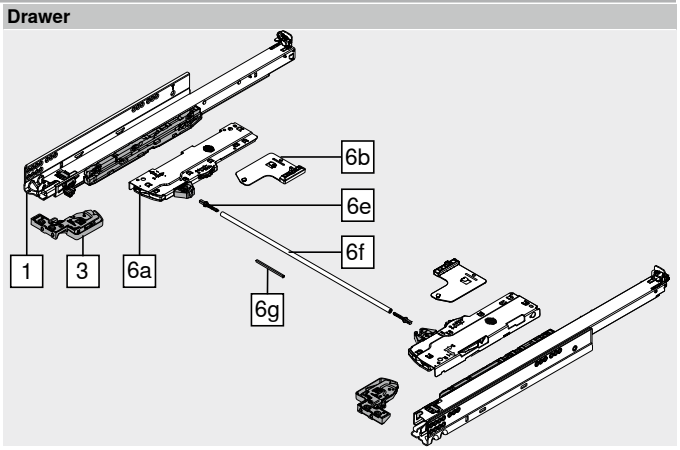

Internal cabinet width LW 265–313 mm

6g TIP-ON BLUMOTION synchronisation[1]

Version	Colour	Part no.
Square	RAL 7035 light grey	T60.300D

Cutting **6g** Internal cabinet width LW – 241 mm

1 For cutting to size

Accessories

Internal cabinet width LW ≥ 314 mm

6e TIP-ON BLUMOTION synchronisation adapter

Version	Colour		Part no.
Symmetrical	RAL 7035 light grey	2 x	T60.000D

– Front gap template for LEGRABOX | MOVENTO[1]

Front gap FS (mm)	Colour	Part no.
2.5	Orange	65.5631

1 We recommend that you use the front gap template

MOVENTO with TIP-ON BLUMOTION – 760H | 766H

Web code – click on the code or enter it in the Product Configurator: DQD0IM

Planning

Space requirement in cabinet

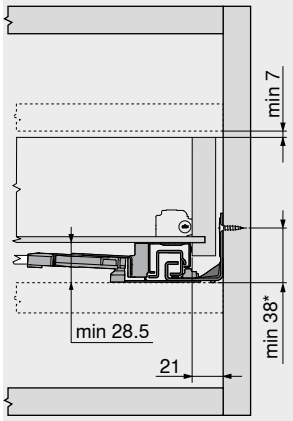

* +1 mm for assembly of the runners prior to cabinet assembly

Drawer | inner drawer

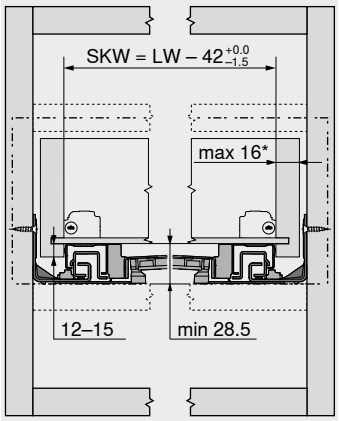

SKW Internal drawer width
LW Internal cabinet width
* Limited side adjustment for a drawer side panel thickness of 16 mm, but with full tolerance utilisation of the internal width of the drawer SKW

Drawer

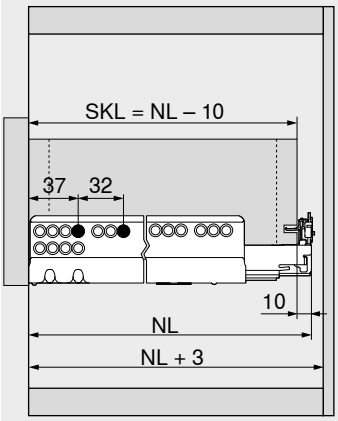

SKL Drawer length
NL Nominal length

Inner drawer

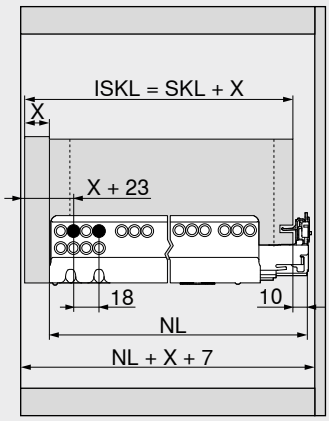

ISKL Inner drawer length
SKL Drawer length
NL Nominal length
X Front thickness

Drawer assembly

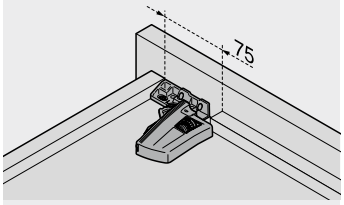

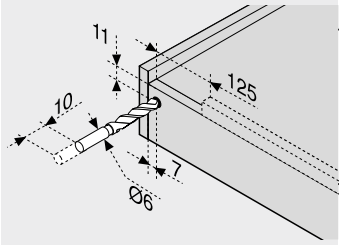

Use drilling template T65.1000.02

Trigger range

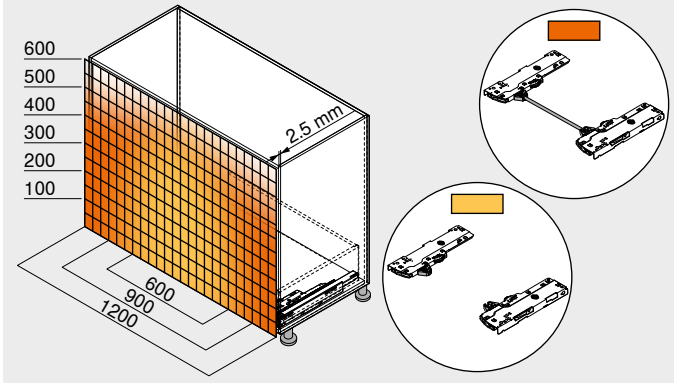

Example for 760H – 40 kg, nominal length NL 500 mm, four-sided drawer, with and without synchronisation
To optimise the function and increase the trigger range, we generally recommend using synchronisation

Reference pages

Overview	503
MOVENTO	410
TIP-ON for **MOVENTO** | **TANDEM**	506
CABLOXX	594
Accessories	420
Attachment of runners	428
Blum services	602
More technical details	708

Assembly, removal and adjustment

Short URL
www.blum.com/a460

Easy to open – with just a touch



Reliable handle-less opening
Handle-less fronts are playing a greater and greater role in modern furniture design. With **TIP-ON** – the mechanical opening support system from Blum – handle-less drawers and pull-outs open with just a touch. To close, simply press shut.

Multitude of applications
The **TIP-ON** runner can be used for all standard applications, from standard cabinets to special solutions such as the **SPACE STEP**.



The **TIP-ON** function is integrated into the runner. For straightforward installation and ease of use.

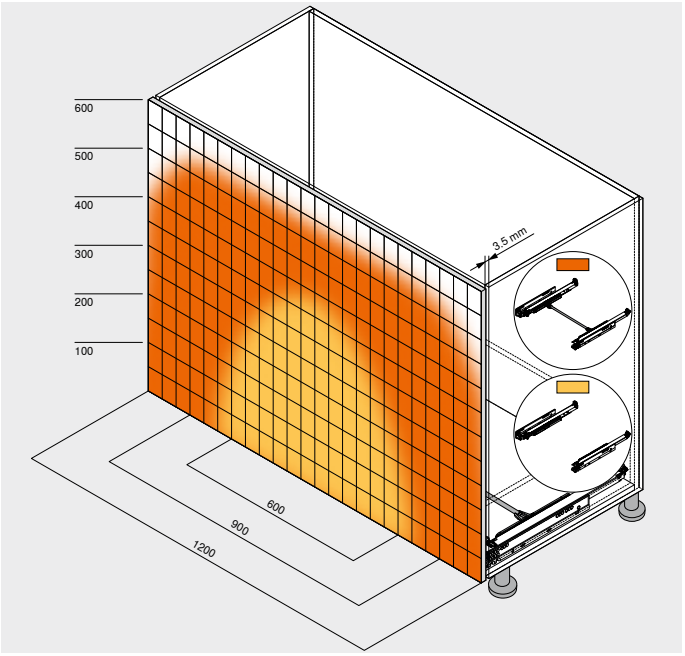

The optional synchronisation ensures secure opening and closing even for wide fronts.

Runner systems


Symbolic image

Runner systems 408
MOVENTO 410
TANDEM 430
SERVO-DRIVE for **MOVENTO** | **TANDEM** 462
TIP-ON BLUMOTION for **MOVENTO** 502

Overview


Symbolic image

Overview – runners 508

Accessories


Symbolic image

Pull-out shelf lock 420
Side stabilisation set 422
Depth adjustment 422
Longside gallery rail with chipboard back fixing 423
Fixing bracket for pull-out shelf 423
Corner connectors 424
Gallery rail for pull-out shelf corner connectors 424
Lock-open stop 425
Screws 426
Centre bit 426
Door buffer 426
Screwdriver 427

Attachment of runners

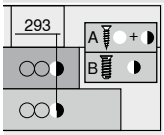

Symbolic image

Runner – 760H – 40 kg 428
Runner – 766H – 60 | 70 kg 428
Runner – 560H – 30 kg 528
Runner – 550H – 30 kg 528
Runner – 561H – 30 kg 529
Runner – 551H – 30 kg 529
Runner – 560F – 30 kg 530
Runner – 550F – 30 kg 530
Runner – 561F – 30 kg 530
Runner – 551F – 30 kg 530

Assembly, removal and adjustment

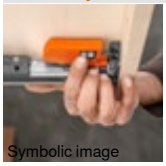
Symbolic image

Assembly, removal and adjustment

Short URL
www.blum.com/a430

Pictograph

Item available on request

Web code – click on the code or enter it in the Product Configurator

MOVENTO

Applications	kg	BLUMOTION by Blum	SERVO-DRIVE by Blum	TIP-ON BLUMOTION by Blum	TIP-ON by Blum	Web code	Page
MOVENTO – locking device feature							
 **MOVENTO** with **TIP-ON** – 760H | 766H	40 60 70	–	–	–	●	DQCZTA	510

kg Dynamic carrying capacity ● Integrated ○ Optional – Not possible

Web code – click on the code or enter it in the Product Configurator

TANDEM 11–16 mm

Applications	kg	BLUMOTION by Blum	SERVO-DRIVE by Blum	TIP-ON BLUMOTION by Blum	TIP-ON by Blum	Web code	Page
TANDEM – locking device feature							
 **TANDEM** full extension with **TIP-ON** – 560H	30	–	–	–	●	DQEEHC	512
 **TANDEM** single extension with **TIP-ON** – 550H	30	–	–	–	●	DQD41C	514
TANDEM – hook and peg variant							
 **TANDEM** full extension with **TIP-ON** – 561H	30	–	–	–	●	DQEGLC	516
 **TANDEM** single extension with **TIP-ON** – 551H	30	–	–	–	●	DQD6UP	518

TANDEM 17–19 mm

Applications	kg	BLUMOTION by Blum	SERVO-DRIVE by Blum	TIP-ON BLUMOTION by Blum	TIP-ON by Blum	Web code	Page
TANDEM 19 mm – locking device feature							
 **TANDEM** full extension with **TIP-ON** – 560F	30	–	–	–	●	DQEF6P	520
 **TANDEM** single extension with **TIP-ON** – 550F	30	–	–	–	●	DQHNAP	522
TANDEM 19 mm – hook and peg variant							
 **TANDEM** full extension with **TIP-ON** – 561F	30	–	–	–	●	DQEHAP	524
 **TANDEM** single extension with **TIP-ON** – 551F	30	–	–	–	●	DQHQ4Z	526

kg Dynamic carrying capacity ● Integrated o Optional – Not possible

Web code – click on the code or enter it in the Product Configurator

MOVENTO with TIP-ON – 760H | 766H

Web code – click on the code or enter it in the Product Configurator: DQCZTA



- Concealed full extension with integrated **TIP-ON**, the mechanical opening support system
- Synchronised feather-light glide
- Tool-free side, height, and tilt adjustment
- Integrated tool-free depth adjustment
- Built-in width and depth tolerance compensation
- Compatible with the side stabilisation for **MOVENTO**
- Optional **TIP-ON** synchronisation for secure triggering even with wide fronts

Space requirement

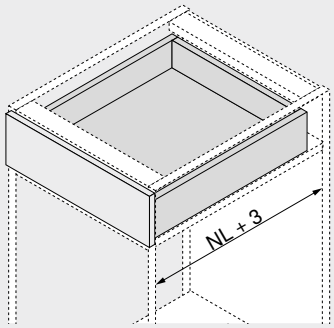

NL Nominal length

Order information

1 Runners left/right

Version	TIP-ON[1]		
Nominal length NL (mm)	Dynamic carrying capacity (kg)		
	40	60	70
250	760H2500T		
270	760H2700T		
300	760H3000T		
320	760H3200T		
350	760H3500T		
380	760H3800T		
400	760H4000T		
420	760H4200T		
450	760H4500T		766H4500T
480	760H4800T		
500	760H5000T		766H5000T
520	760H5200T		766H5200T
550	760H5500T		766H5500T
580			766H5800T
600	760H6000T		766H6000T
650			766H6500T
700		766H7000T	
750		766H7500T	

[1] The output path can vary depending on the load or the adjustment!

3 Locking device

Colour	Material		Part no.
Orange	Nylon/steel	[1]	T51.7601

[1] Order left/right

Accessories

6 TIP-ON synchronisation pinion set

Version	Colour	Part no.
Round	RAL 7037 dust grey	T57.7400.01

Consisting of:
6a 1 x Locking device
6b 1 x Overload locking device
6c 2 x Attachment

6f TIP-ON synchronisation linkage[1]

Version	Material	Part no.
Round	Aluminium	ZST.1160W

Cutting **6f** Internal cabinet width LW – 249 mm

[1] For cutting to size
Suitable up to internal cabinet width LW 1409 mm
To optimise the function and increase the trigger range, we generally recommend using synchronisation

12 Side stabilisation set[2]

Nominal length NL (mm)[1]	Colour	Part no.
Up to 400	RAL 7037 dust grey	ZS7M400MU
Up to 600		ZS7M600MU
Up to 750		ZS7M750MU

[1] For cutting to size
[2] Suitable for cabinet width KB 1400 mm
We recommend using a side stabiliser with wide pull-outs with a short nominal length

Drawer

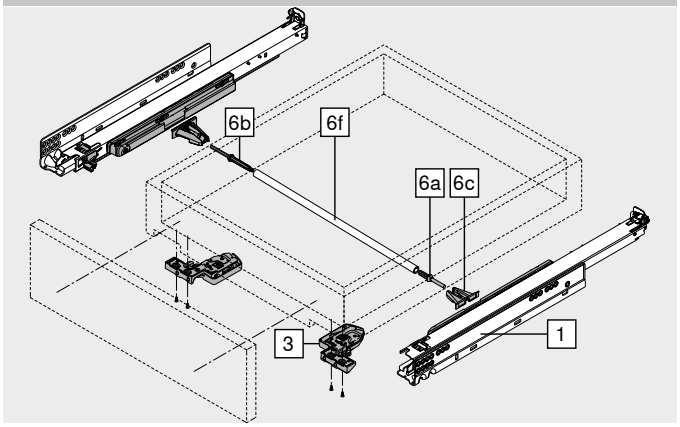

MOVENTO with TIP-ON – 760H | 766H

Web code – click on the code or enter it in the Product Configurator **DQCZTA**

Planning

Space requirement in cabinet

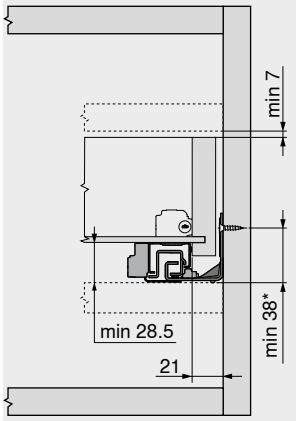

* +1 mm for assembly of the runners prior to cabinet assembly

Drawer | inner drawer

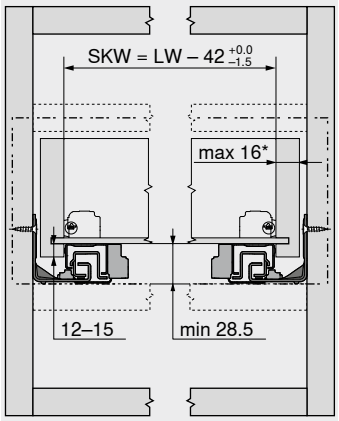

SKW Internal drawer width
LW Internal cabinet width
* Limited side adjustment for a drawer side panel thickness of 16 mm, but with full tolerance utilisation of the internal width of the drawer SKW

Drawer

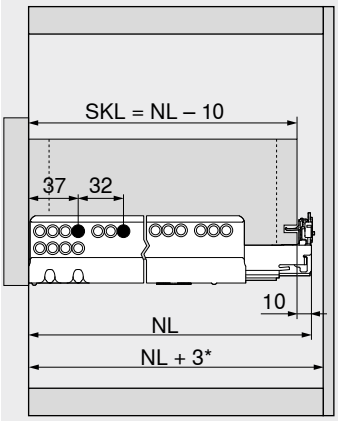

SKL Drawer length
NL Nominal length
* Additional +12 mm with side stabilisation

Inner drawer

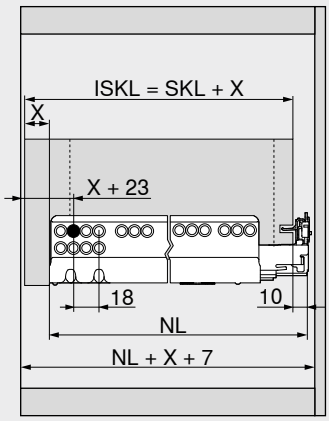

ISKL Inner drawer length
SKL Drawer length
NL Nominal length
X Front thickness

Drawer assembly

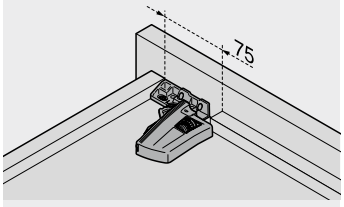

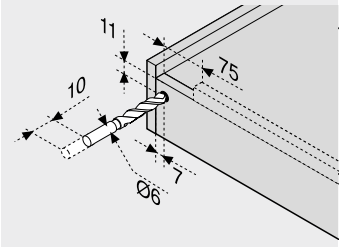

Use drilling template T65.1000.02

Trigger range

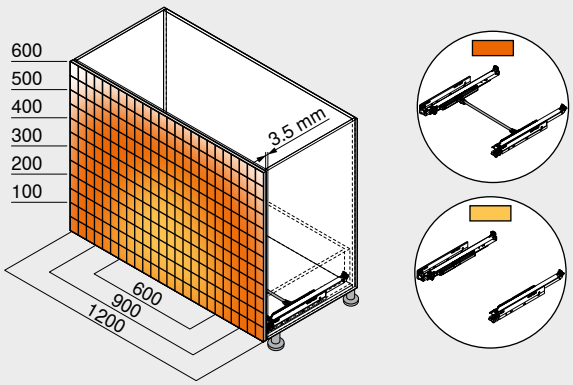

Example for 760H – 40 kg, nominal length NL 500 mm, four-sided drawer, with and without synchronisation

Reference pages

Overview	507
MOVENTO	410
TIP-ON BLUMOTION for **MOVENTO**	502
CABLOXX	594
Accessories	420
Attachment of runners	428
Blum services	602
More technical details	708

Assembly, removal and adjustment

Short URL
www.blum.com/a430

TANDEM full extension with TIP-ON – 560H

Web code – click on the code or enter it in the Product Configurator: DQEEHC



- Runner for wooden drawers with a panel thickness of **11–16 mm**
- Concealed **TANDEM** full extension with soft end stop when opening and integrated **TIP-ON** mechanical opening support system
- Low-friction cylindrical rollers ensure a feather-light glide
- Tool-free height adjustment via a locking device
- Tool-free integrated front tilt adjustment
- Built-in width and depth tolerance compensation
- Recommendation: optional **TIP-ON** synchronisation for secure triggering even with wide fronts

Space requirement

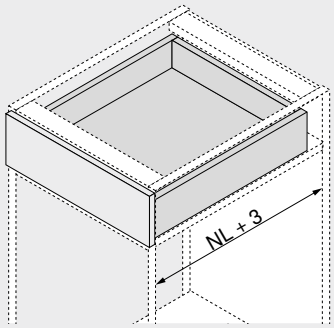

NL Nominal length

Order information

1 Runners left/right



Version	TIP-ON
Nominal length NL (mm)	**Dynamic carrying capacity (kg) 30**
250	560H2500T
270	560H2700T
300	560H3000T
320	560H3200T
350	560H3500T
380	560H3800T
400	560H4000T
420	560H4200T
450	560H4500T
480	560H4800T
500	560H5000T
520	560H5200T
550	560H5500T
600	560H6000T

3 Locking device



Colour	Material	Part no.
Orange	Nylon/zinc [1]	T51.1700.04

[1] Order left/right

Accessories

4 Front adjuster



Colour	Material	Part no.
Natural	Nylon 2 x	295.1000

6f TIP-ON synchronisation linkage[1]

Version	Colour	Part no.
Profile	Grey	T57.1140S

Cutting 6f Internal cabinet width LW – 31 mm

[1] For cutting to size
Suitable up to internal cabinet width LW 1171 mm
To optimise the function and increase the trigger range, we generally recommend using synchronisation

Drawer

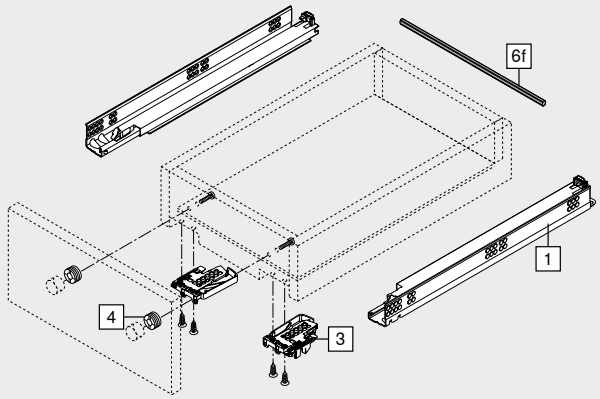

Inner drawer

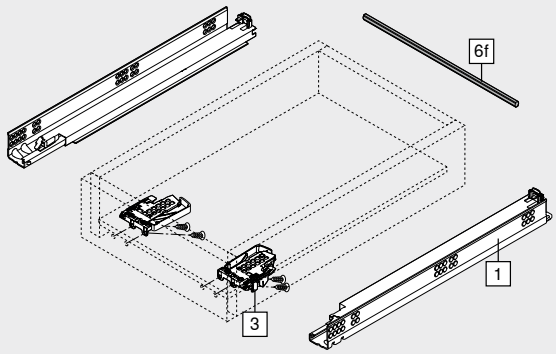

TANDEM full extension with TIP-ON – 560H

Web code – click on the code or enter it in the Product Configurator **DQEEHC**

Planning

Space requirement in cabinet

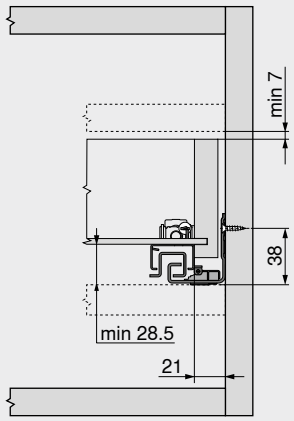

Drawer | inner drawer

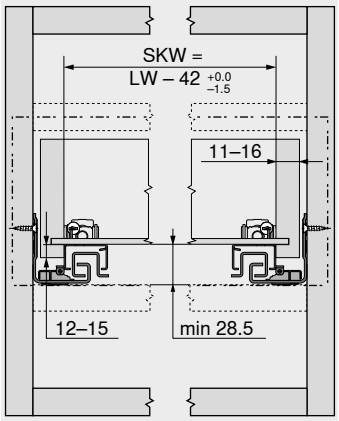

SKW	Internal drawer width
LW	Internal cabinet width

Drawer

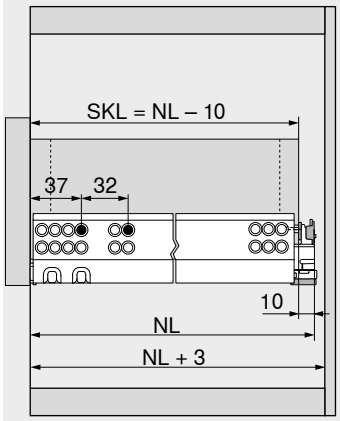

SKL	Drawer length
NL	Nominal length

Inner drawer

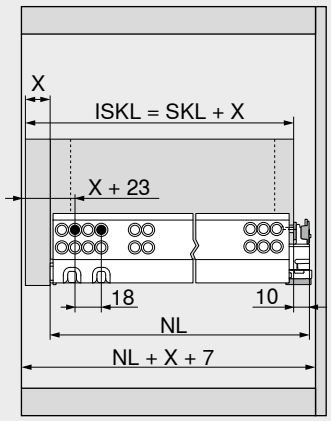

ISKL	Inner drawer length
SKL	Drawer length
NL	Nominal length
X	Front thickness

Drawer assembly

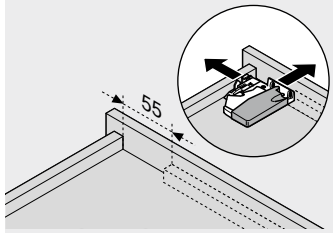

Use drilling template T65.1000.02

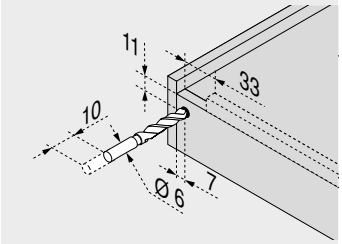

Use drilling template T65.1000.02

Trigger range

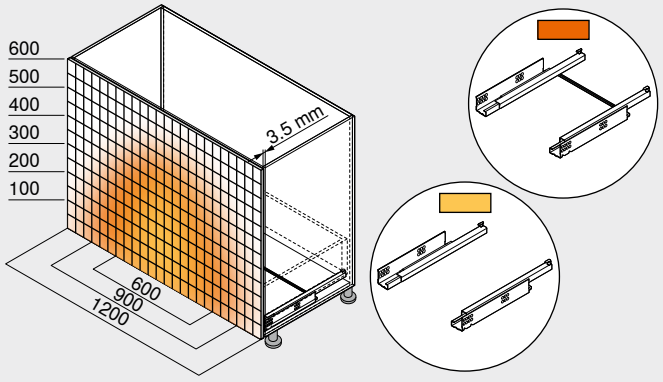

Example for 560H – 30 kg, nominal length NL 500 mm, four sided drawer, with synchronisation

Reference pages

Overview	507
TANDEM	430
CABLOXX	594
Accessories	452
Attachment of runners	528
Blum services	602
More technical details	708

Assembly, removal and adjustment

Short URL
www.blum.com/a420

TANDEM single extension with TIP-ON – 550H

Web code – click on the code or enter it in the Product Configurator: DQD41C



- Runner for wooden drawers with a panel thickness of **11–16 mm**
- Concealed **TANDEM** single extension with soft end stop when opening and integrated **TIP-ON** mechanical opening support system
- Low-friction cylindrical rollers ensure a feather-light glide
- Tool-free height adjustment via a locking device
- Built-in width and depth tolerance compensation
- Recommendation: optional **TIP-ON** synchronisation linkage for secure triggering even with wide fronts

Space requirement

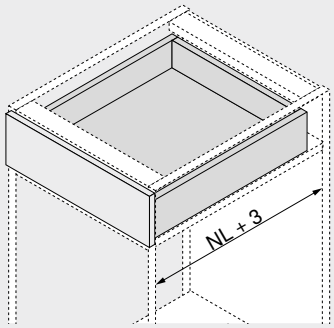

NL Nominal length

Order information

1 Runners left/right



Version	TIP-ON
Nominal length NL (mm)	**Dynamic carrying capacity (kg) 30**
270	550H2700T
300	550H3000T
350	550H3500T
400	550H4000T
450	550H4500T
500	550H5000T
550	550H5500T
600	550H6000T
650	550H6500T

3 Locking device



Colour	Material	Part no.
Orange	Nylon/zinc [1]	T51.1700.04

[1] Order left/right

Accessories

4 Front adjuster



Colour	Material	Part no.
Natural	Nylon 2 x	295.1000

6f TIP-ON synchronisation linkage[1]

Version	Colour	Part no.
Profile	Grey	T57.1140S

Cutting 6f Internal cabinet width LW – 31 mm

[1] For cutting to size
Suitable up to internal cabinet width LW 1171 mm
To optimise the function and increase the trigger range, we generally recommend using synchronisation

Drawer

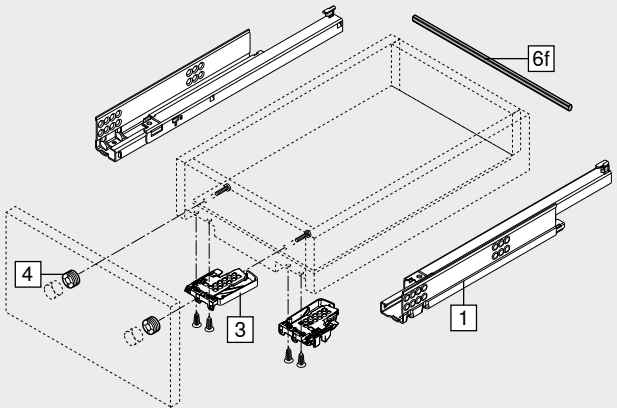

Inner drawer

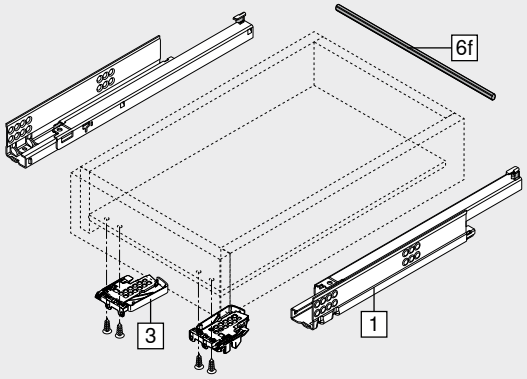

TANDEM single extension with TIP-ON – 550H

Web code – click on the code or enter it in the Product Configurator DQD41C

Planning

Space requirement in cabinet

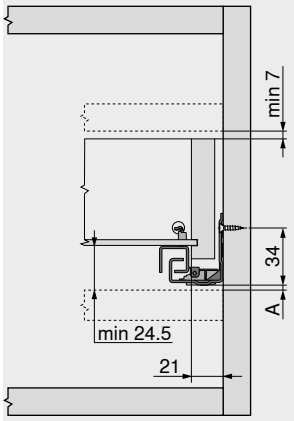

A	3 mm distance to interchange with full extension

Drawer | inner drawer

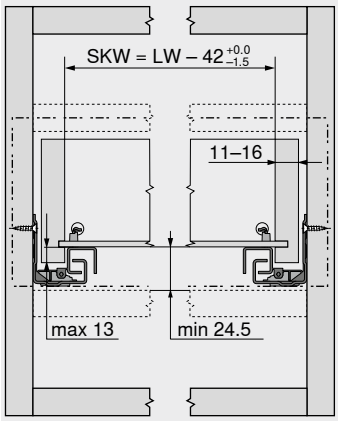

SKW	Internal drawer width
LW	Internal cabinet width

Drawer

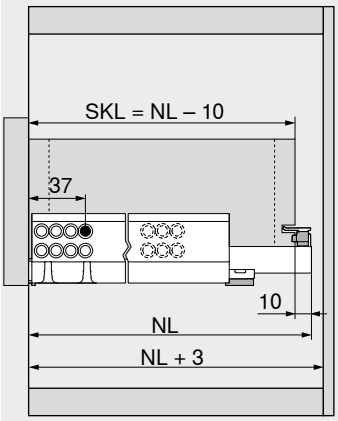

SKL	Drawer length
NL	Nominal length

Inner drawer

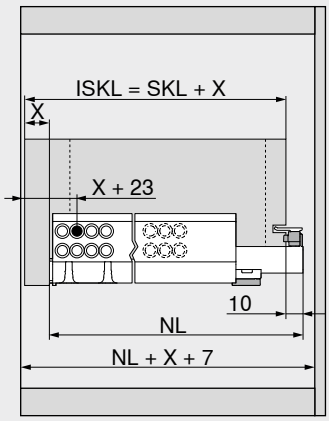

ISKL	Inner drawer length
SKL	Drawer length
NL	Nominal length
X	Front thickness

Drawer assembly

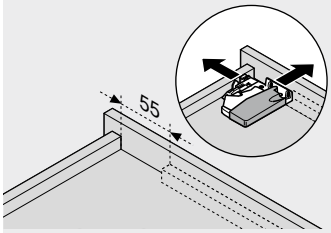

Use drilling template T65.1000.02

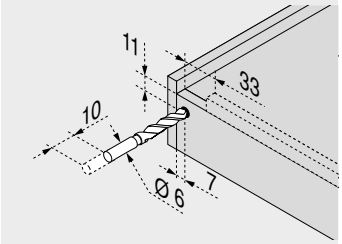

Use drilling template T65.1000.02

Trigger range

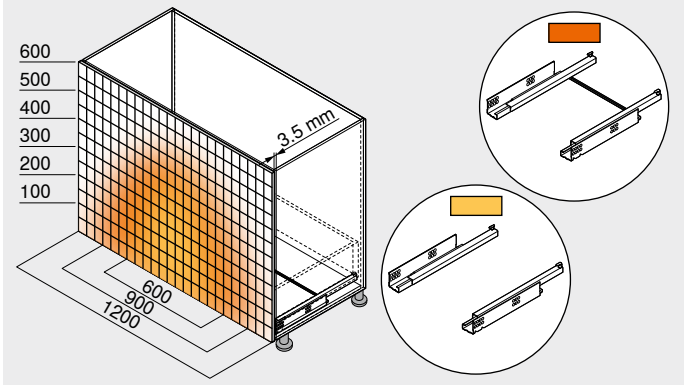

Example for 550H – 30 kg, nominal length NL 500 mm, four sided drawer, with synchronisation

Reference pages

Overview	507
TANDEM	430
Accessories	452
Attachment of runners	528
CABLOXX	594
Blum services	602
More technical details	708

Assembly, removal and adjustment

Short URL
www.blum.com/a420

TANDEM full extension with TIP-ON – 561H

Web code – click on the code or enter it in the Product Configurator: DQEGLC



- Runner for wooden drawers with a panel thickness of **11–16 mm**
- Concealed **TANDEM** full extension with soft end stop when opening and integrated **TIP-ON** mechanical opening support system
- Low-friction cylindrical rollers ensure a feather-light glide
- Lift-off stop and height adjustment integrated into runner system
- Tool-free integrated front tilt adjustment
- Recommendation: optional **TIP-ON** synchronisation for secure triggering even with wide fronts

Space requirement

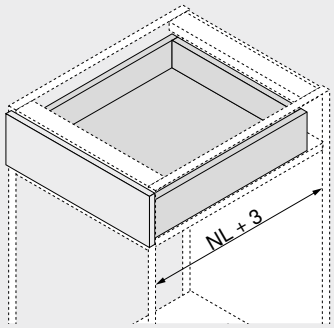

NL Nominal length

Order information

1 **Runners left/right**



Version	TIP-ON
Nominal length NL (mm)	**Dynamic carrying capacity (kg) 30**
260	561H2601T
285	561H2851T
310	561H3101T
335	561H3351T
360	561H3601T
385	561H3851T
410	561H4101T
435	561H4351T
460	561H4601T
485	561H4851T
510	561H5101T
535	561H5351T
560	561H5601T

Accessories

4 **Front adjuster**



Colour	Material		Part no.
Natural	Nylon	2 x	295.1000

6f **TIP-ON synchronisation linkage**[1]



Version	Colour	Part no.
Profile	Grey	T57.1140S

Cutting 6f Internal cabinet width LW – 31 mm

[1] For cutting to size
Suitable up to internal cabinet width LW 1171 mm
To optimise the function and increase the trigger range, we generally recommend using synchronisation

Drawer

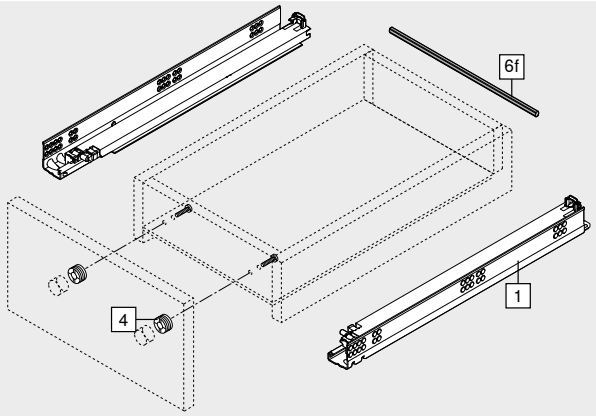

Inner drawer

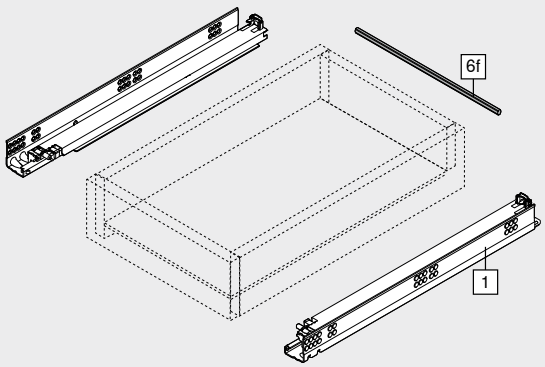

TANDEM full extension with TIP-ON – 561H

Web code – click on the code or enter it in the Product Configurator: DQEGLC

Planning

Space requirement in cabinet

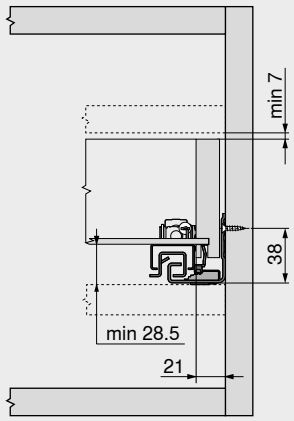

Drawer | inner drawer

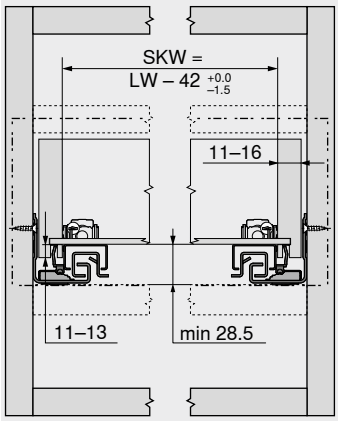

SKW	Internal drawer width
LW	Internal cabinet width

Drawer

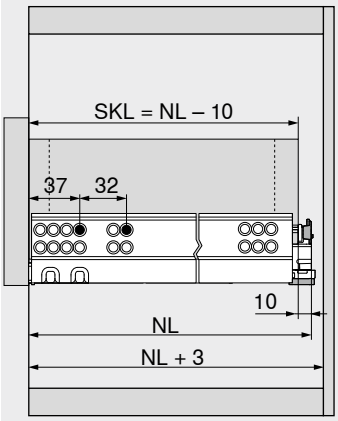

SKL	Drawer length
NL	Nominal length

Inner drawer

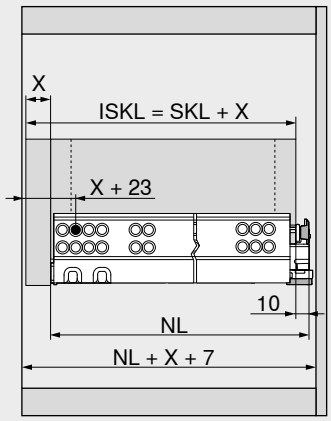

ISKL	Inner drawer length
SKL	Drawer length
NL	Nominal length
X	Front thickness

Drawer assembly

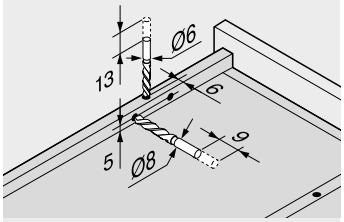

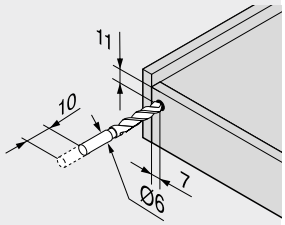

Use drilling template T65.1000.02

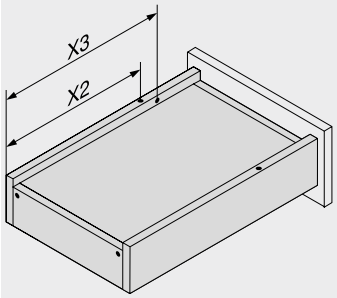

Nominal length	Pegs	Lift-off stop
NL (mm)	X2 (mm)	X3 (mm)
260	205	185
285	220	200
310	230	242
335	245	257
360	275	287
385	285	297
410	300	344
435	310	354
460	335	379
485	350	394
510	360	436
535	375	451
560	405	481

Trigger range

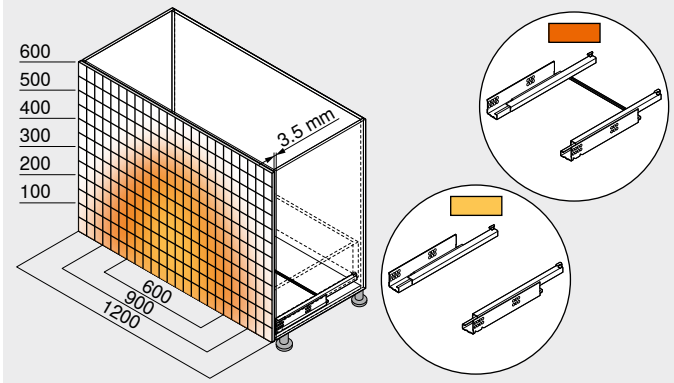

Example for 560H – 30 kg, nominal length NL 500 mm, four sided drawer, with synchronisation

Reference pages

Overview	507
TANDEM	430
CABLOXX	594
Accessories	452
Attachment of runners	528
Blum services	602
More technical details	708

Assembly, removal and adjustment

Short URL
www.blum.com/a420

TANDEM single extension with TIP-ON – 551H

Web code – click on the code or enter it in the Product Configurator: DQD6UP



- Runner for wooden drawers with a panel thickness of **11–16 mm**
- Concealed **TANDEM** single extension with soft end stop when opening and integrated **TIP-ON** mechanical opening support system
- Low-friction cylindrical rollers ensure a feather-light glide
- Lift-off stop and height adjustment integrated into runner system
- Recommendation: optional **TIP-ON** synchronisation linkage for secure triggering even with wide fronts

Space requirement

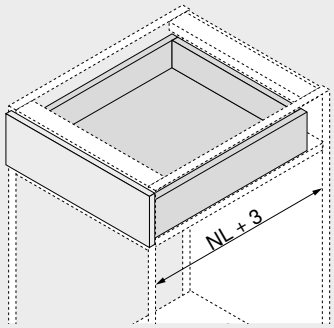

NL Nominal length

Order information

1 Runners left/right

Version	TIP-ON		
Nominal length NL (mm)	**Dynamic carrying capacity (kg) 30**		
250	☎ 551H2601T		
285	☎ 551H2851T		
310	☎ 551H3101T		
335	☎ 551H3351T		
360	☎ 551H3601T		
385	☎ 551H3851T		
410	☎ 551H4101T		
435	☎ 551H4351T		
460	☎ 551H4601T		
485	☎ 551H4851T		
510	☎ 551H5101T		
535	☎ 551H5351T		
560	☎ 551H5601T		

Accessories

4 Front adjuster

Colour	Material		Part no.
Natural	Nylon	2 x	295.1000

6f TIP-ON synchronisation linkage[1]

Version	Colour	Part no.
Profile	Grey	T57.1140S

Cutting 6f Internal cabinet width LW – 31 mm

[1] For cutting to size
Suitable up to internal cabinet width LW 1171 mm
To optimise the function and increase the trigger range, we generally recommend using synchronisation

Drawer

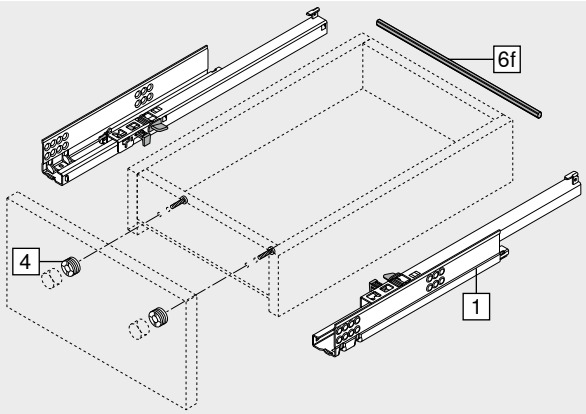

Inner drawer

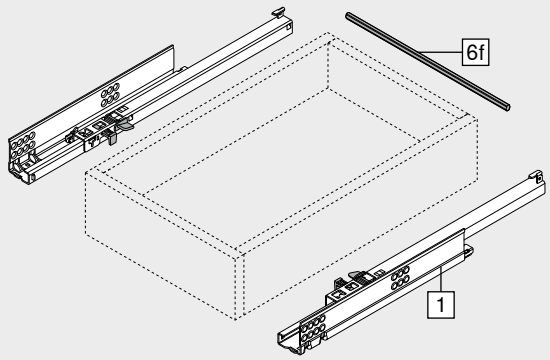

TANDEM single extension with TIP-ON – 551H

Web code – click on the code or enter it in the Product Configurator: DQD6UP

Planning

Space requirement in cabinet

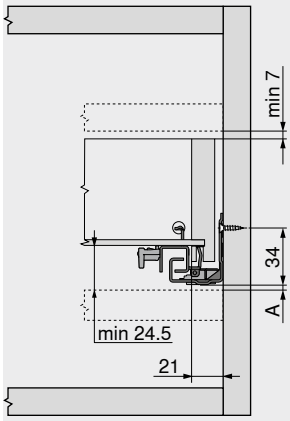

A	3 mm distance to interchange with full extension

Drawer | inner drawer

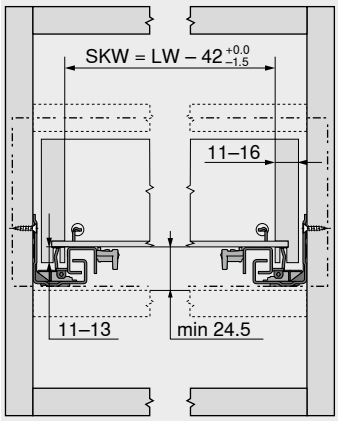

SKW	Internal drawer width
LW	Internal cabinet width

Drawer

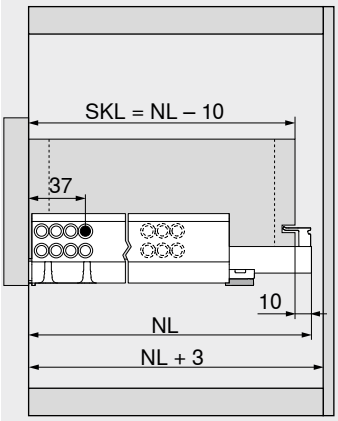

SKL	Drawer length
NL	Nominal length

Inner drawer

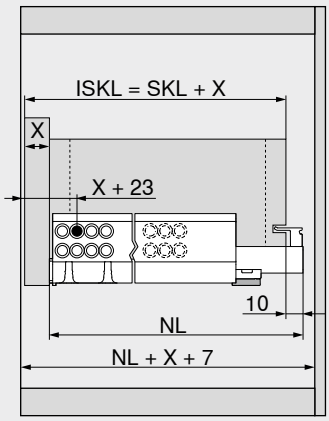

ISKL	Inner drawer length
SKL	Drawer length
NL	Nominal length
X	Front thickness

Drawer assembly

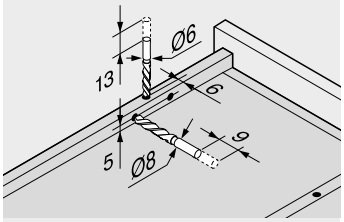

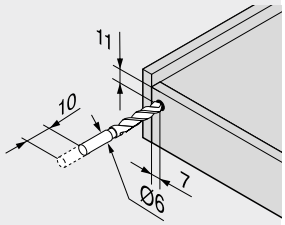

Use drilling template T65.1000.02

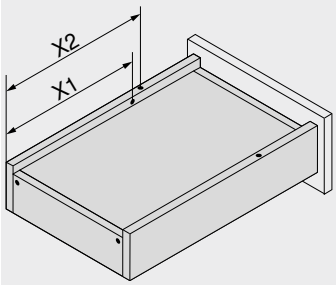

Nominal length	Pegs	Lift-off stop
NL (mm)	X2 (mm)	X1 (mm)
260	205	185
285	220	200
310	230	210
335	245	225
360	275	255
385	285	265
410	300	280
435	310	290
460	335	315
485	350	330
510	360	340
535	375	355
560	405	385

Trigger range

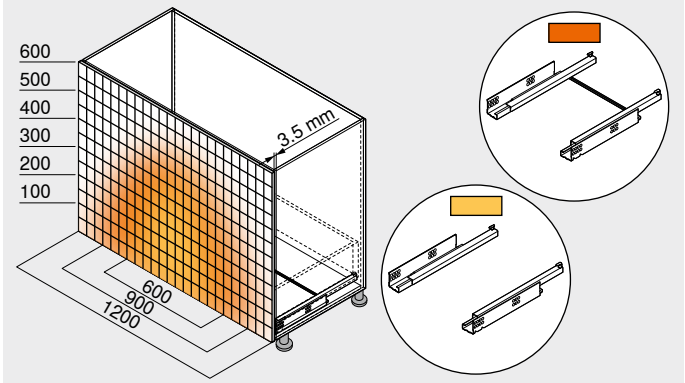

Example for 550H – 30 kg, nominal length NL 500 mm, four sided drawer, with synchronisation

Reference pages

Overview	507
TANDEM	430
CABLOXX	594
Accessories	452
Attachment of runners	528
Blum services	602
More technical details	708

Assembly, removal and adjustment

Short URL
www.blum.com/a420

TANDEM full extension with TIP-ON – 560F

Web code – click on the code or enter it in the Product Configurator: DQEF6P



- Runner for wooden drawers with a panel thickness of **17–19 mm**
- Concealed **TANDEM** full extension with soft end stop when opening and integrated **TIP-ON** mechanical opening support system
- Low-friction cylindrical rollers ensure a feather-light glide
- Tool-free height adjustment via a locking device
- Tool-free integrated front tilt adjustment
- Built-in width and depth tolerance compensation
- Recommendation: optional **TIP-ON** synchronisation for secure triggering even with wide fronts

Space requirement

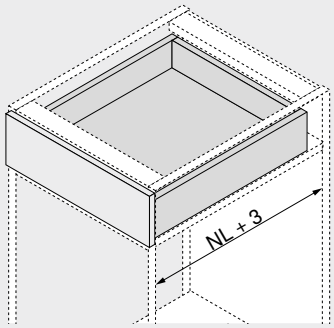

NL Nominal length

Order information

1 Runners left/right

Version	TIP-ON		
Nominal length NL (mm)	Dynamic carrying capacity (kg) 30		
250	560F2500T		
270	560F2700T		
300	560F3000T		
350	560F3500T		
400	560F4000T		
450	560F4500T		
500	560F5000T		
550	560F5500T		
600	560F6000T		

3 Locking device

Colour	Material		Part no.
Orange	Nylon/zinc	[1]	T51.1700.04

[1] Order left/right

Accessories

4 Front adjuster

Colour	Material		Part no.
Natural	Nylon	2 x	295.1000

6f TIP-ON synchronisation linkage[1]

Version	Colour	Part no.
Profile	Grey	T57.1140S

Cutting 6f Internal cabinet width LW – 39 mm

[1] For cutting to size
Suitable up to internal cabinet width LW 1179 mm
To optimise the function and increase the trigger range, we generally recommend using synchronisation

Drawer

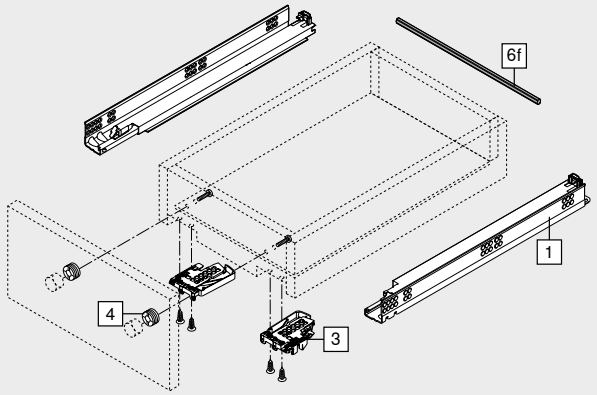

Inner drawer

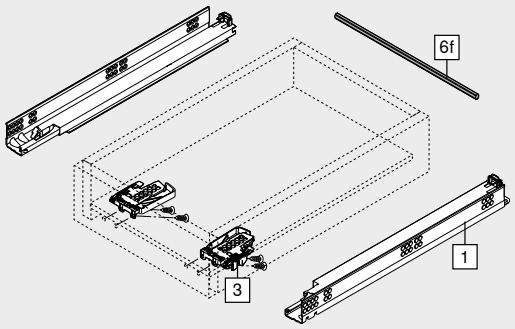

TANDEM full extension with TIP-ON – 560F

Web code – click on the code or enter it in the Product Configurator: DQEF6P

Planning

Space requirement in cabinet

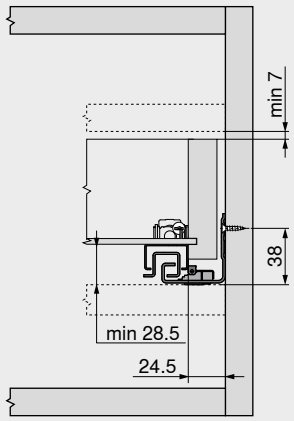

Drawer | inner drawer

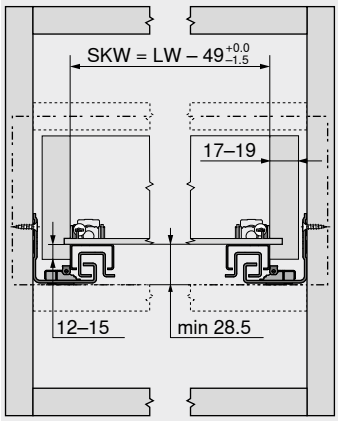

SKW	Internal drawer width
LW	Internal cabinet width

Drawer

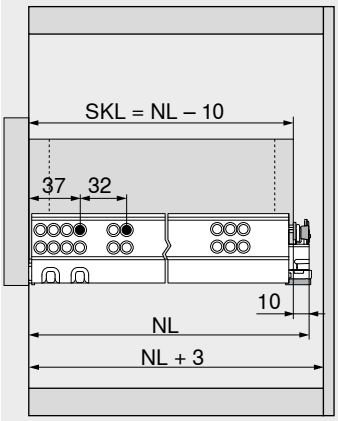

SKL	Drawer length
NL	Nominal length

Inner drawer

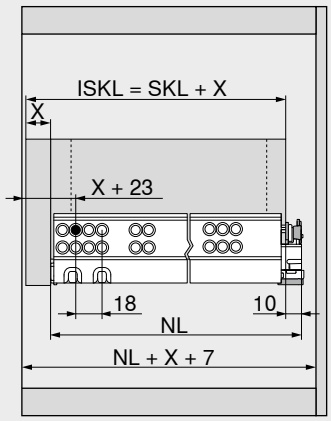

ISKL	Inner drawer length
SKL	Drawer length
NL	Nominal length
X	Front thickness

Drawer assembly

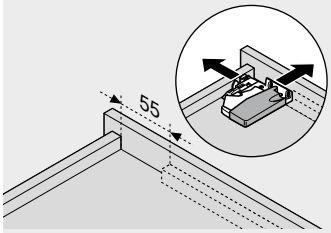

Use drilling template T65.1000.02

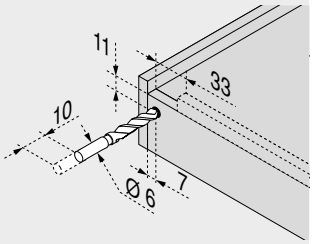

Use drilling template T65.1000.02

Trigger range

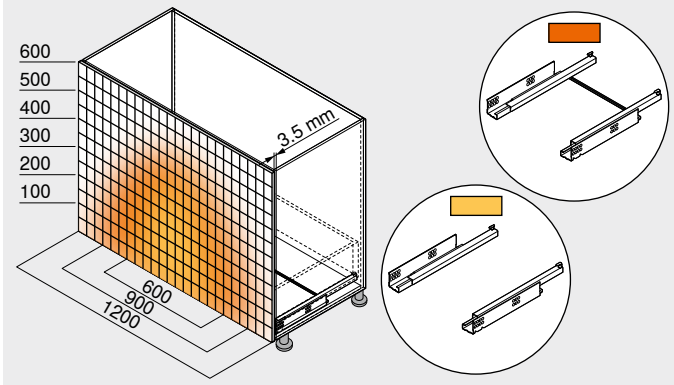

Example for 560F – 30 kg, nominal length NL 500 mm, four sided drawer, with synchronisation

Reference pages

Overview	507
TANDEM	430
CABLOXX	594
Accessories	452
Attachment of runners	530
Blum services	602
More technical details	708

TANDEM 19 mm

Short URL
www.blum.com/i011

Assembly, removal and adjustment

Short URL
www.blum.com/a420

TANDEM single extension with TIP-ON – 550F

Web code – click on the code or enter it in the Product Configurator: DQHNAP



- Runner for wooden drawers with a panel thickness of **17–19 mm**
- Concealed **TANDEM** single extension with soft end stop when opening and integrated **TIP-ON** mechanical opening support system
- Low-friction cylindrical rollers ensure a feather-light glide
- Tool-free height adjustment via a locking device
- Built-in width and depth tolerance compensation
- Recommendation: optional **TIP-ON** synchronisation linkage for secure triggering even with wide fronts

Space requirement

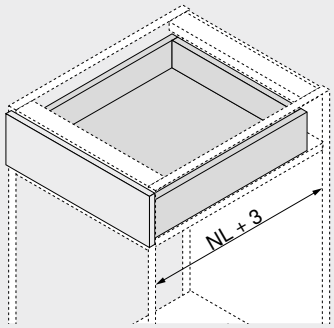

NL Nominal length

Order information

1 Runners left/right

Nominal length NL (mm)	Version: TIP-ON Dynamic carrying capacity (kg): 30
270	☎ 550F2700T
300	☎ 550F3000T
350	☎ 550F3500T
400	☎ 550F4000T
450	☎ 550F4500T
500	☎ 550F5000T
550	☎ 550F5500T
600	☎ 550F6000T
650	☎ 550F6500T

3 Locking device

Colour	Material	Part no.
Orange	Nylon/zinc [1]	T51.1700.04

[1] Order left/right

Accessories

4 Front adjuster

Colour	Material	Part no.
Natural	Nylon 2 x	295.1000

6f TIP-ON synchronisation linkage[1]

Version	Colour	Part no.
Profile	Grey	T57.1140S

Cutting 6f Internal cabinet width LW – 39 mm

[1] For cutting to size
Suitable up to internal cabinet width LW 1179 mm
To optimise the function and increase the trigger range, we generally recommend using synchronisation

Drawer

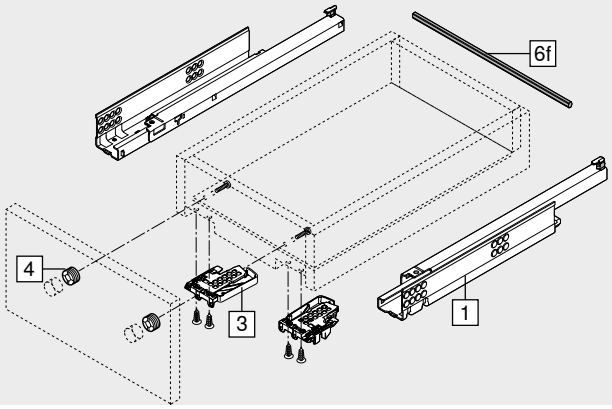

Inner drawer

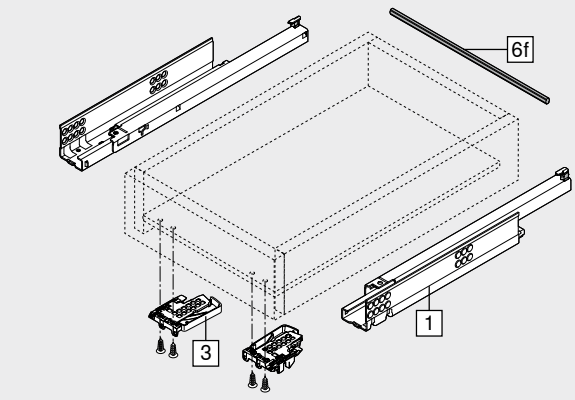

TANDEM single extension with TIP-ON – 550F

Web code – click on the code or enter it in the Product Configurator: DQHNAP

Planning

Space requirement in cabinet

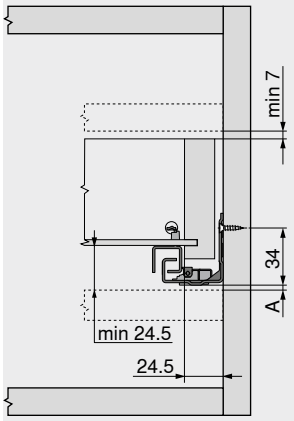

A	3 mm distance to interchange with full extension

Drawer | inner drawer

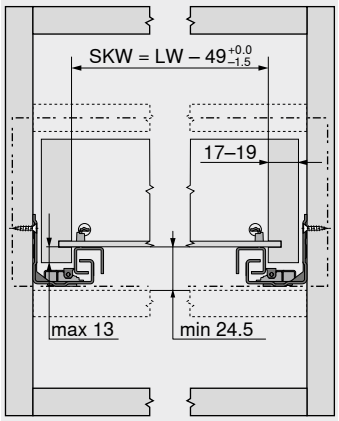

SKW	Internal drawer width
LW	Internal cabinet width

Drawer

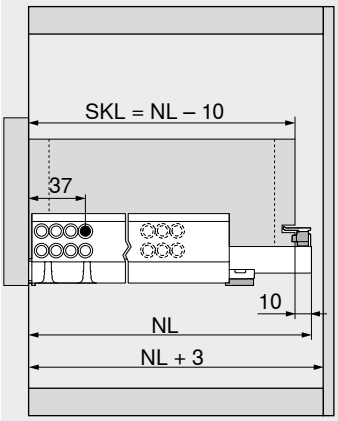

SKL	Drawer length
NL	Nominal length

Inner drawer

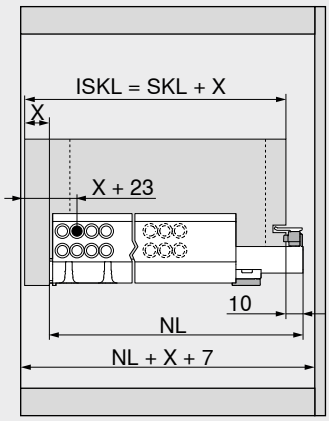

ISKL	Inner drawer length
SKL	Drawer length
NL	Nominal length
X	Front thickness

Drawer assembly

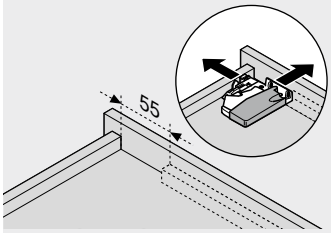

Use drilling template T65.1000.02

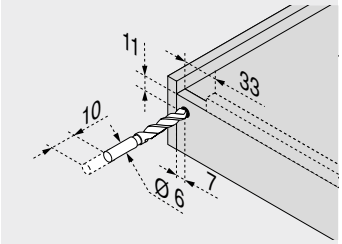

Use drilling template T65.1000.02

Trigger range

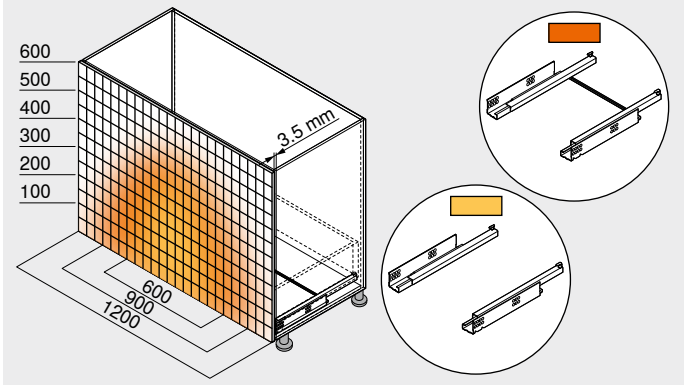

Example for 550F – 30 kg, nominal length NL 500 mm, four sided drawer, with synchronisation

Reference pages

Overview	507
TANDEM	430
Accessories	452
Attachment of runners	530
CABLOXX	594
Blum services	602
More technical details	708

TANDEM 19 mm

Short URL
www.blum.com/i011

Assembly, removal and adjustment

Short URL
www.blum.com/a420

TANDEM full extension with TIP-ON – 561F

Web code – click on the code or enter it in the Product Configurator: DQEHAP



- Runner for wooden drawers with a panel thickness of **17–19 mm**
- Concealed **TANDEM** full extension with soft end stop when opening and integrated **TIP-ON** mechanical opening support system
- Low-friction cylindrical rollers ensure a feather-light glide
- Lift-off stop and height adjustment integrated into runner system
- Tool-free integrated front tilt adjustment
- Recommendation: optional **TIP-ON** synchronisation for secure triggering even with wide fronts

Space requirement

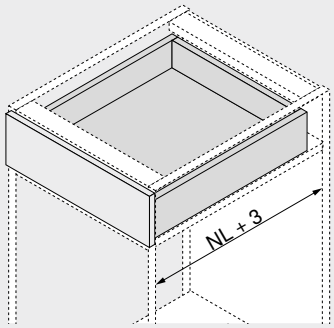

NL Nominal length

Order information

1 Runners left/right



Version	TIP-ON		
Nominal length	**Dynamic carrying capacity (kg)**		
NL (mm)	**30**		
260	☎ 561F2601T		
310	☎ 561F3101T		
360	☎ 561F3601T		
410	☎ 561F4101T		
460	☎ 561F4601T		
510	☎ 561F5101T		
560	☎ 561F5601T		

Accessories

4 Front adjuster



Colour	Material		Part no.
Natural	Nylon	2 x	295.1000

6f TIP-ON synchronisation linkage[1]

Version	Colour	Part no.
Profile	Grey	T57.1140S

Cutting **6f** Internal cabinet width LW – 39 mm

[1] For cutting to size
Suitable up to internal cabinet width LW 1179 mm
To optimise the function and increase the trigger range, we generally recommend using synchronisation

Drawer

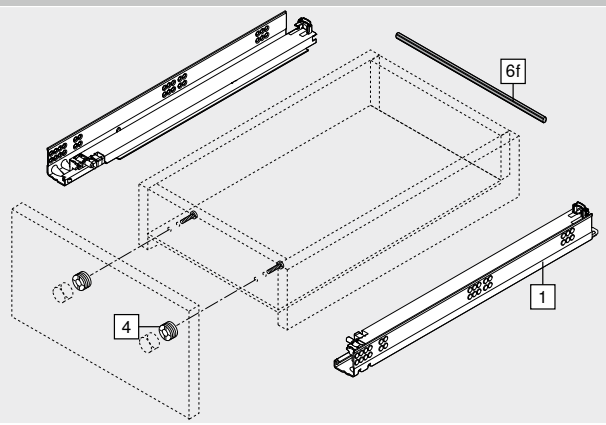

Inner drawer

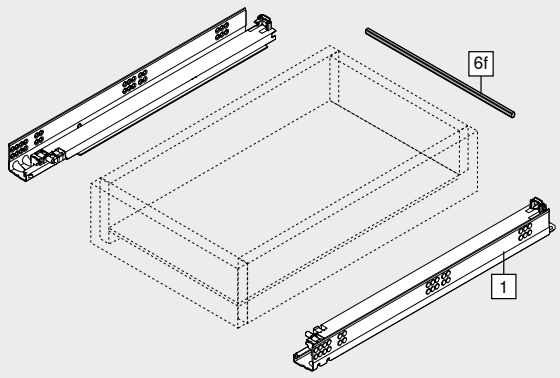

TANDEM full extension with TIP-ON – 561F

Web code – click on the code or enter it in the Product Configurator: DQEHAP

Planning

Space requirement in cabinet

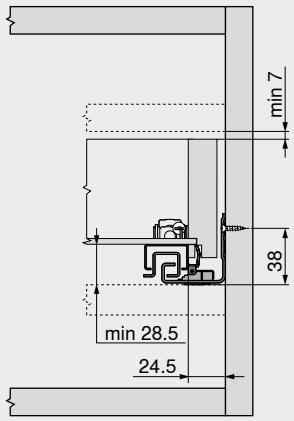

Drawer | inner drawer

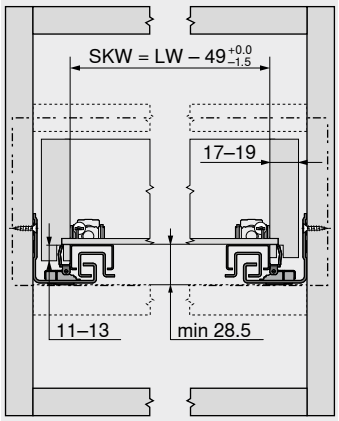

SKW	Internal drawer width
LW	Internal cabinet width

Drawer

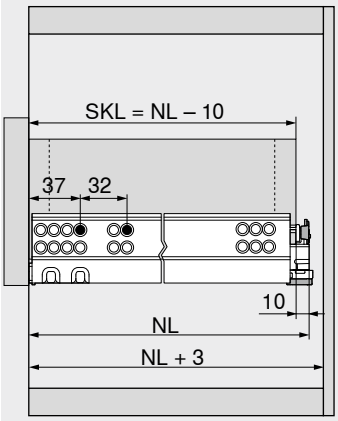

SKL	Drawer length
NL	Nominal length

Inner drawer

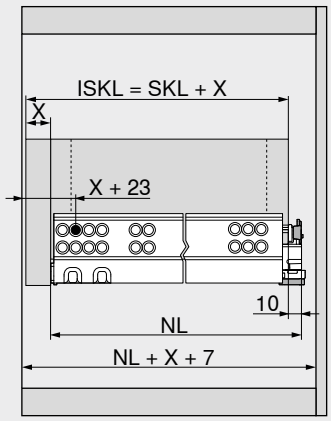

ISKL	Inner drawer length
SKL	Drawer length
NL	Nominal length
X	Front thickness

Drawer assembly

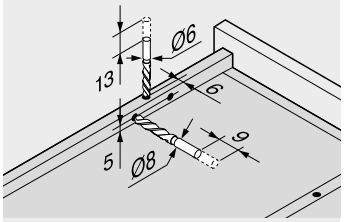

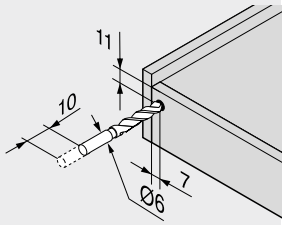

Use drilling template T65.1000.02

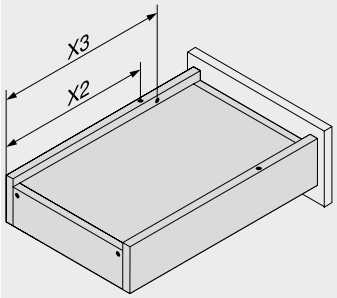

Nominal length	Pegs	Lift-off stop
NL (mm)	X2 (mm)	X3 (mm)
260	205	185
310	230	242
360	275	287
410	300	344
460	335	379
510	360	436
560	405	481

Trigger range

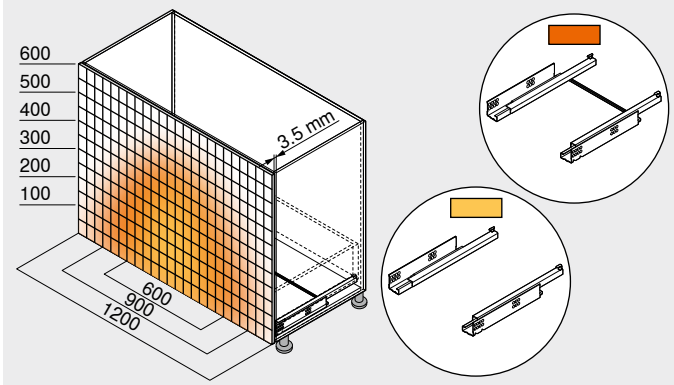

Example for 560F – 30 kg, nominal length NL 500 mm, four sided drawer, with synchronisation

Reference pages

Overview	507
TANDEM	430
CABLOXX	594
Accessories	452
Attachment of runners	530
Blum services	602
More technical details	708

TANDEM 19 mm

Short URL
www.blum.com/i011

Assembly, removal and adjustment

Short URL
www.blum.com/a420

TANDEM single extension with TIP-ON – 551F

Web code – click on the code or enter it in the Product Configurator: DQHQ4Z



- Runner for wooden drawers with a panel thickness of **17–19 mm**
- Concealed **TANDEM** single extension with soft end stop when opening and integrated **TIP-ON** mechanical opening support system
- Low-friction cylindrical rollers ensure a feather-light glide
- Lift-off stop and height adjustment integrated into runner system
- Recommendation: optional **TIP-ON** synchronisation linkage for secure triggering even with wide fronts

Space requirement

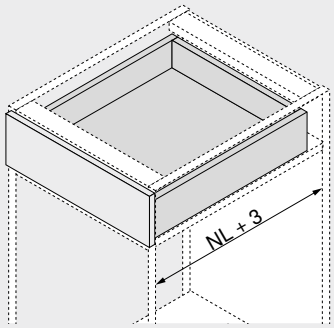

NL Nominal length

Order information

1 Runners left/right

Version	TIP-ON
Nominal length NL (mm)	Dynamic carrying capacity (kg) 30
260	551F2601T
310	551F3101T
360	551F3601T
410	551F4101T
460	551F4601T
510	551F5101T
560	551F5601T

Accessories

4 Front adjuster

Colour	Material		Part no.
Natural	Nylon	2 x	295.1000

6f TIP-ON synchronisation linkage[1]

Version	Colour	Part no.
Profile	Grey	T57.1140S

Cutting **6f** Internal cabinet width LW – 39 mm

[1] For cutting to size
Suitable up to internal cabinet width LW 1179 mm
To optimise the function and increase the trigger range, we generally recommend using synchronisation

Drawer

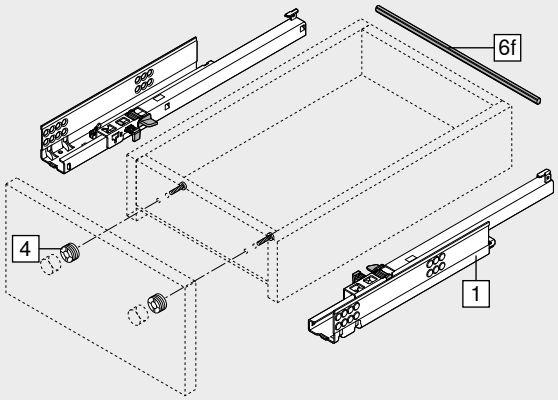

Inner drawer

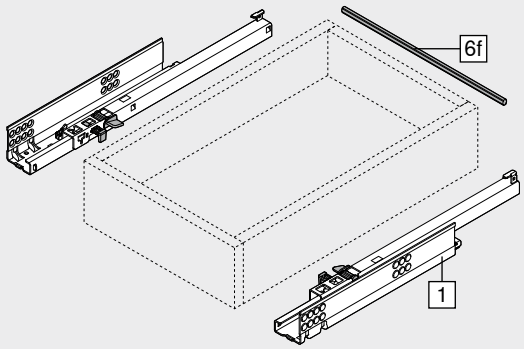

TANDEM single extension with TIP-ON – 551F

Web code – click on the code or enter it in the Product Configurator: DQHQ4Z

Planning

Space requirement in cabinet

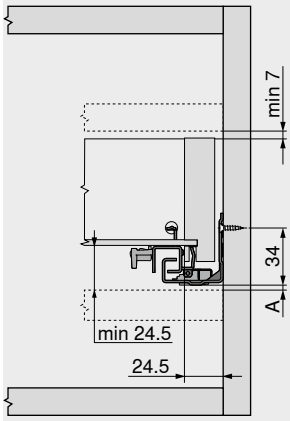

A	3 mm distance to interchange with full extension

Drawer | inner drawer

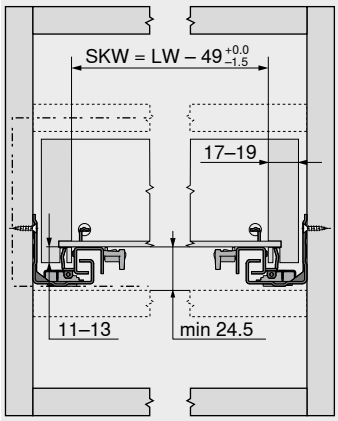

SKW	Internal drawer width
LW	Internal cabinet width

Drawer

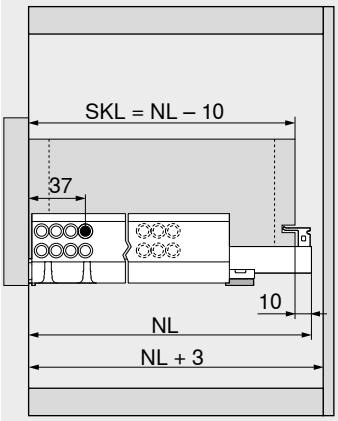

SKL	Drawer length
NL	Nominal length

Inner drawer

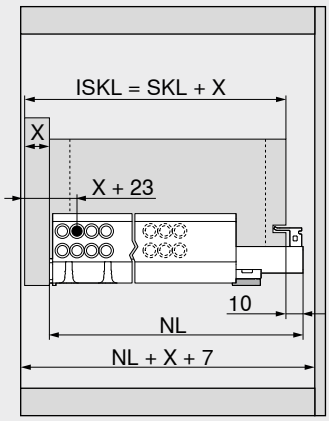

ISKL	Inner drawer length
SKL	Drawer length
NL	Nominal length
X	Front thickness

Drawer assembly

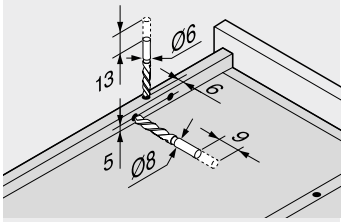

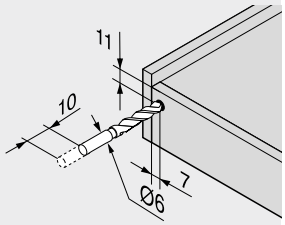

Use drilling template T65.1000.02

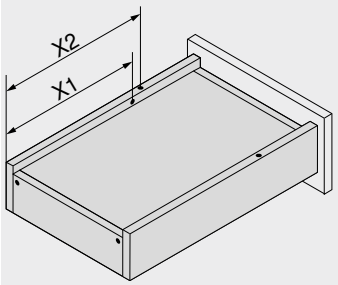

Nominal length	Pegs	Lift-off stop
NL (mm)	X2 (mm)	X1 (mm)
260	205	185
310	230	210
360	275	255
410	300	280
460	335	315
510	360	340
560	405	385

Trigger range

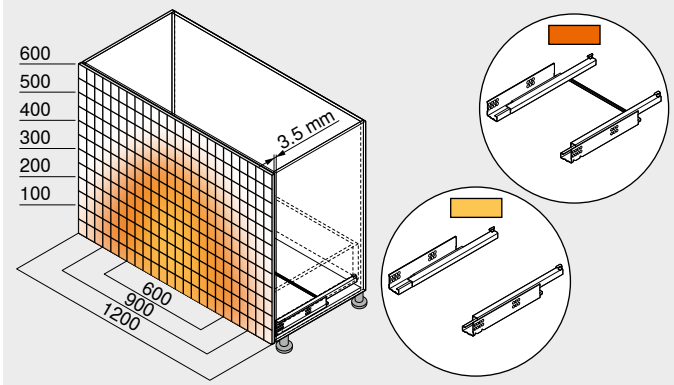

Example for 550F – 30 kg, nominal length NL 500 mm, four sided drawer, with synchronisation

Reference pages

Overview	507
TANDEM	430
CABLOXX	594
Accessories	452
Attachment of runners	530
Blum services	602
More technical details	708

TANDEM 19 mm

Short URL
www.blum.com/i011

Assembly, removal and adjustment

Short URL
www.blum.com/a420

Runner – 560H – 30 kg

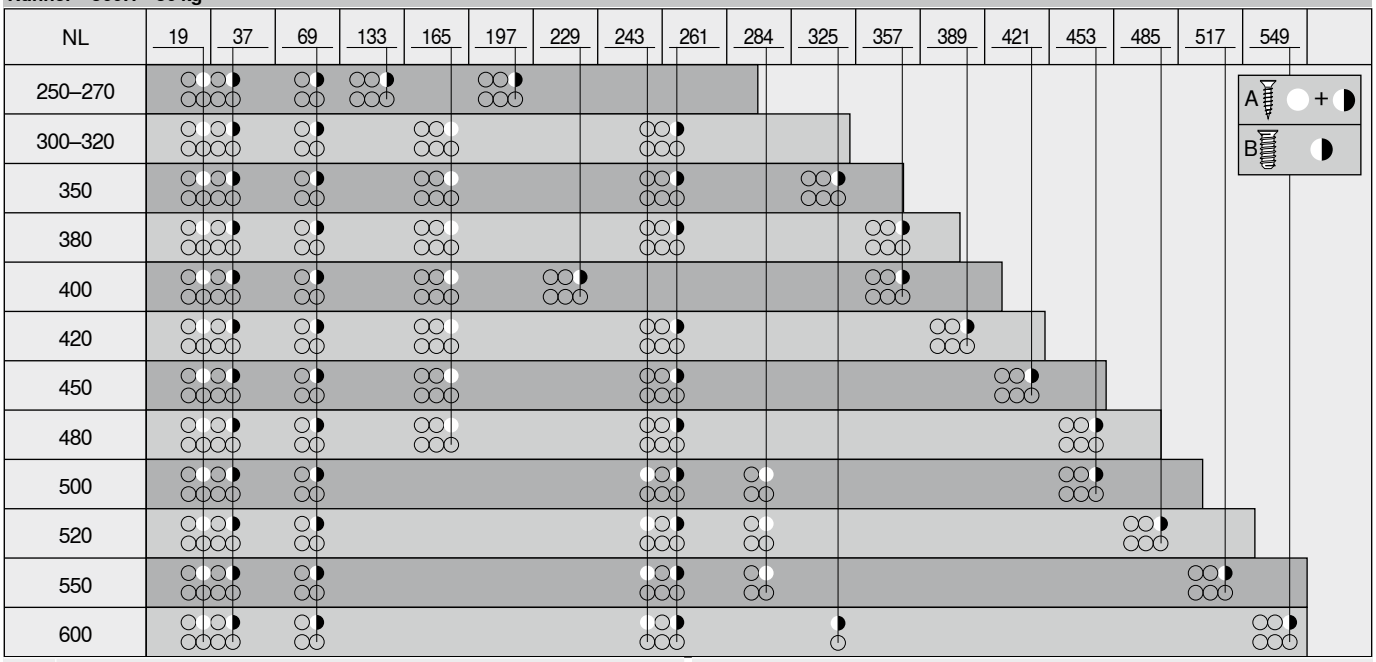

NL	Nominal length
A	Chipboard screws Ø 4 x 15 mm
B	System screws Ø 6 x 14.5 mm, part no. 661.1450.HG

Runner – 550H – 30 kg

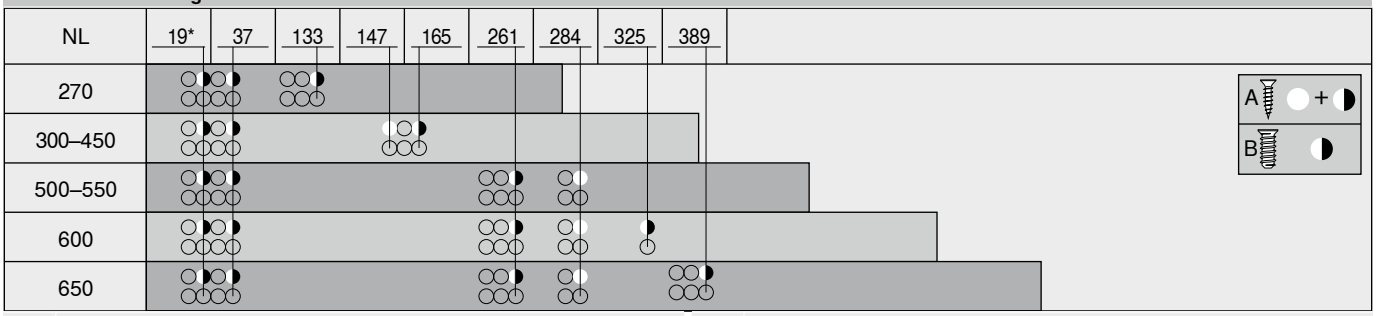

NL	Nominal length
A	Chipboard screws Ø 4 x 15 mm
B	System screws Ø 6 x 14.5 mm, part no. 661.1450.HG
*	Can be replaced with chipboard screw Ø 4 x 15 mm

Runner – 561H – 30 kg

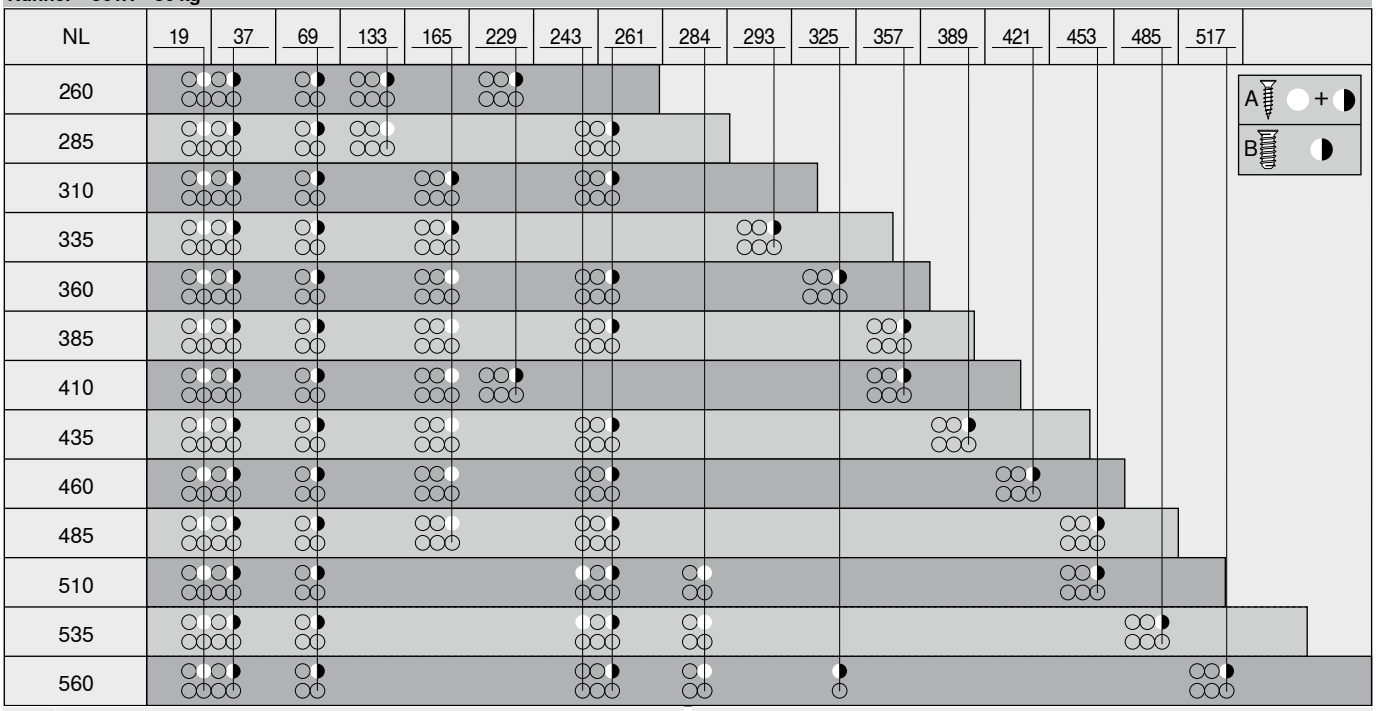

NL	Nominal length
A	Chipboard screws Ø 4 x 15 mm
B	System screws Ø 6 x 14.5 mm, part no. 661.1450.HG

Runner 551H – 30 kg

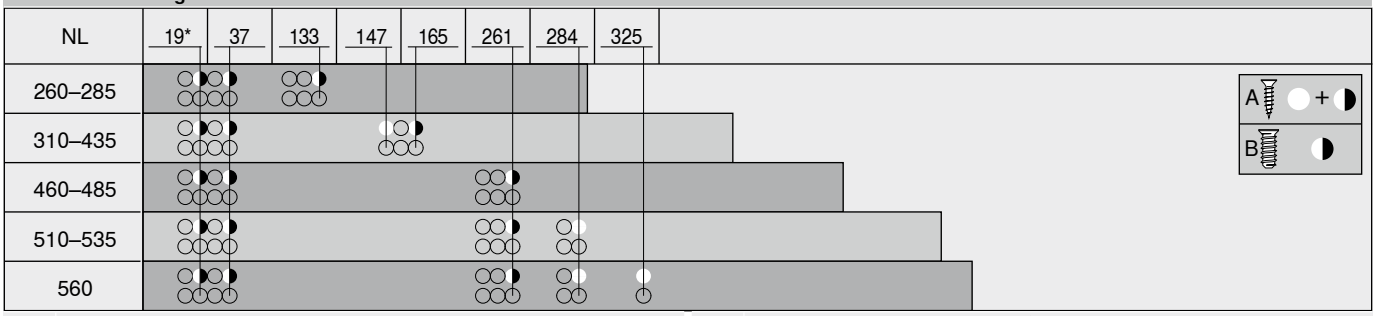

NL	Nominal length
A	Chipboard screws Ø 4 x 15 mm
B	System screws Ø 6 x 14.5 mm, part no. 661.1450.HG
*	Can be replaced with chipboard screw Ø 4 x 15 mm

Runner – 560F – 30 kg

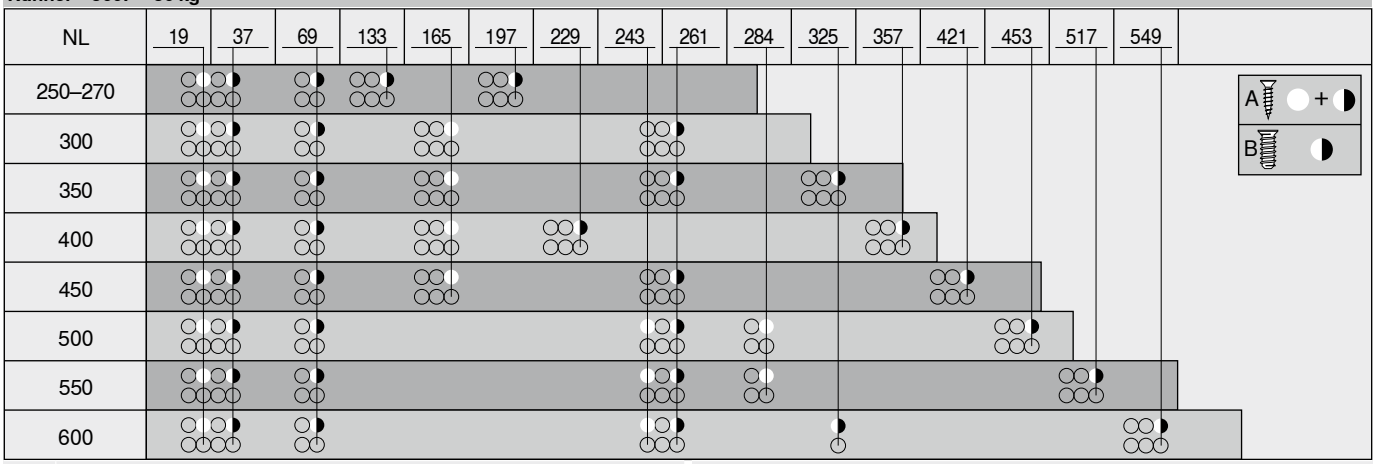

NL Nominal length
A Chipboard screws Ø 4 x 15 mm
B System screws Ø 6 x 14.5 mm, part no. 661.1450.HG

Runner – 550F – 30 kg

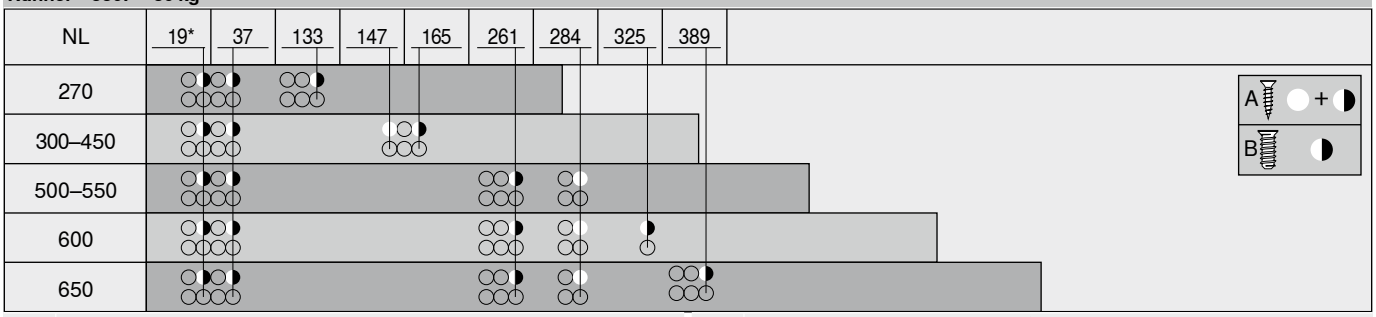

NL Nominal length
A Chipboard screws Ø 4 x 15 mm
B System screws Ø 6 x 14.5 mm, part no. 661.1450.HG
* Can be replaced with chipboard screw Ø 4 x 15 mm

Runner – 561F – 30 kg

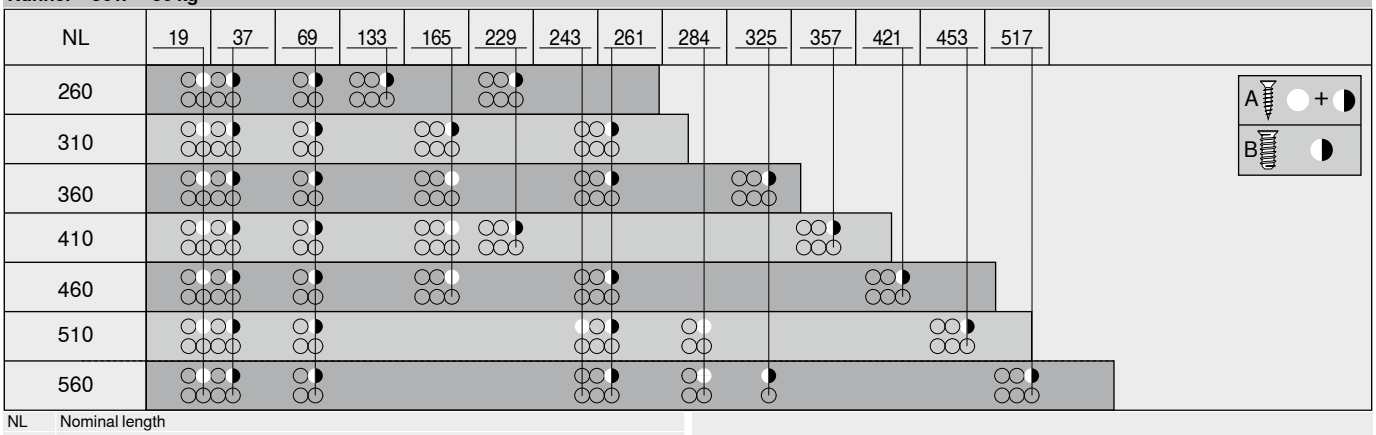

NL Nominal length
A Chipboard screws Ø 4 x 15 mm
B System screws Ø 6 x 14.5 mm, part no. 661.1450.HG

Runner 551F – 30 kg

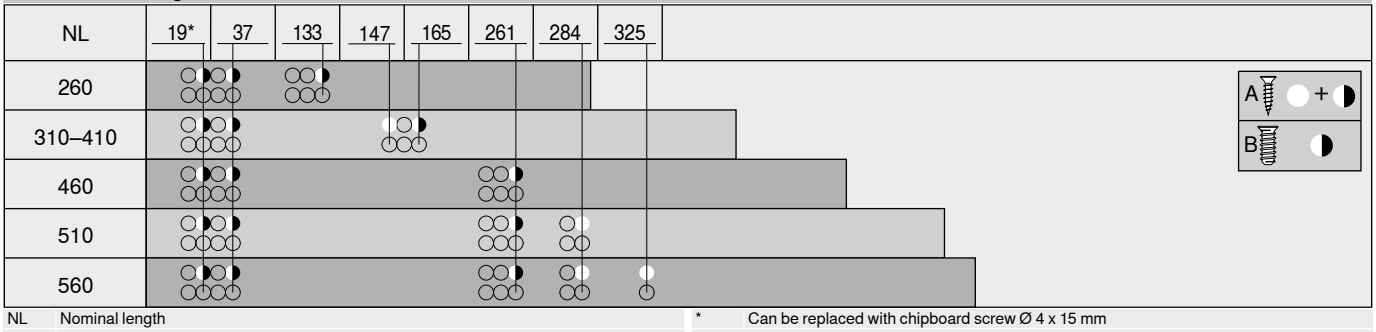

NL Nominal length
A Chipboard screws Ø 4 x 15 mm
B System screws Ø 6 x 14.5 mm, part no. 661.1450.HG
* Can be replaced with chipboard screw Ø 4 x 15 mm