

COMPACT CLIP

The Evolution of Innovation

blum.com


blum



Contents

COMPACT CLIP Hinges

4 Product Overview

6 COMPACT CLIP Testing Standards

7 General Specifications

8 Features

9 Adjustments

10 Hinge Program Overview

13 Accessories

15 Machines and Machine Accessories

16 Part Number Index

COMPACT CLIP Hinges
The Evolution of Innovation

The COMPACT CLIP hinge combines more than 50 years of innovations into a single hinge. Featuring Blum's proven CLIP technology, doors can be removed and reattached quickly and tool free. The hinge comes pre-attached to the plate. Designed with soft-close BLUMOTION and three-dimensional cam adjustments, COMPACT CLIP is user-friendly for cabinetmakers and installers alike.





CLIP Technology

The CLIP technology reduces the risk of damage to cabinet frames because doors can be removed and reattached without removing any screws.



Cam height adjustment

This new feature allows doors to be adjusted up and down, without removing screws and repositioning the door.

© 2025 Blum, Inc. Subject to technical modifications without notice

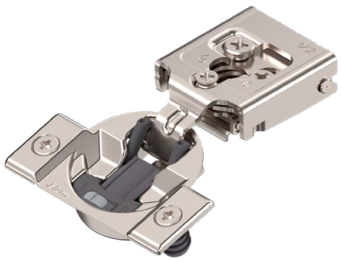

COMPACT CLIP hinges for partial overlay

30C2: Partial overlay hinges with a 105° opening angle and 7/16" cup depth



COMPACT CLIP hinges for full overlay

31C3: Full overlay hinges with a 110° opening angle and 1/2” cup depth



COMPACT CLIP hinges for full overlay

31C1: Full overlay hinges with a 107° opening angle and 7/16” cup depth



Deactivation option

The BLUMOTION function can be easily deactivated on one of the hinges, allowing small or light doors to close with the same high quality of motion.



Interchangeability

COMPACT CLIP hinges are interchangeable with all current COMPACT BLUMOTION and COMPACT hinges so there is no need to change existing setups or workflows.



Overload safety feature

This feature protects the hinge from damage if the door is slammed and maintains the BLUMOTION soft closing for the life of the hinge.

 © 2025 Blum, Inc.

Conditions for Tests

Blum, Inc. does a great deal of testing to ensure that the quality of our hardware is consistent with the usual high standards that our customers have come to expect from Blum. For this reason we have rigorous testing procedures which are carried out from the development stage through production. Blum's internal testing standards are based on practical applications of our products and are more stringent than what is required by ANSI/BHMA.

NOTE: All Blum hinges meet or exceed ANSI/BHMA A156.9 Grade 2 requirements. All concealed hinges are designed for indoor use.

ISO 9001

Blum, Inc. is ISO 9001 certified which means that you are assured of consistent quality in every Blum product.

ANSI/BHMA

All Blum hinges meet or exceed ANSI/BHMA Grade 2 requirements. Contact your local Blum representative for more details.

ISO 9001 Certified Quality System

Cycle test	
Specifications	▬ Door size – 23-5/8" height, 23-5/8" width, 3/4" thickness ▬ Door weight –14.3 lb for cycle tests ▬ Door weight – 18.5 lb for load and over push tests ▬ Boring distance – **3** mm
Distance between hinges	▬ 16-15/16"
Hinge and mounting plate attachment	▬ Hinges are mounted to test blocks and attached to test door and stand with clamps ▬ Test blocks for door: Particle board ▬ Test blocks for mounting plate: Wood

Cycle test

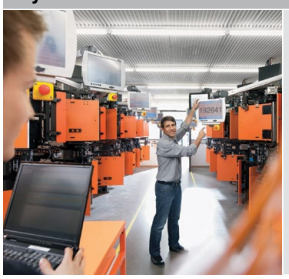

Without load

▬ 150,000 opening and closing for all COMPACT CLIP

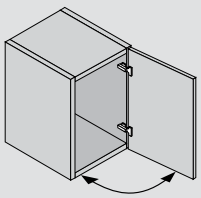

Positive test result

With load

▬ 11 lb extra weight is applied for 100,000 opening and closing cycles

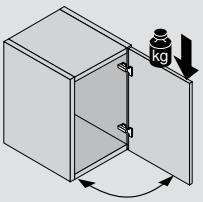

Positive test result

Load test



Static load

▬ 67 lb applied ten times for five seconds, each at 45° opening angle

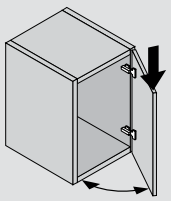

Positive test result

Dynamic load

▬ 44 lb extra weight applied for fifty opening and closing cycles

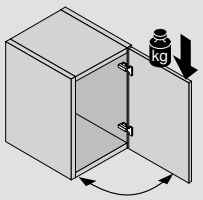

Positive test result

Over push test

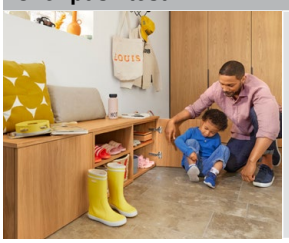

Without load

▬ COMPACT CLIP hinges – Increasing forces up to 15 lb applied for a total of 40 times for five seconds each

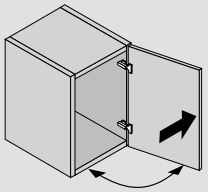

Positive test result

© 2025 Blum, Inc. Subject to technical modifications without notice

Screw-on

Use #6 wood screws.

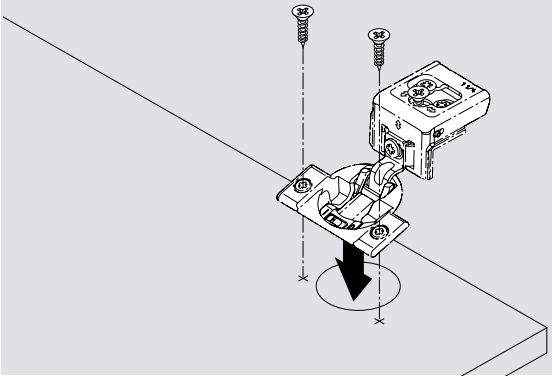

Press-in

Pre-attached Ø**8** dowels installed with Blum press-in tool or MINIPRESS with COMPACT insertion ram.

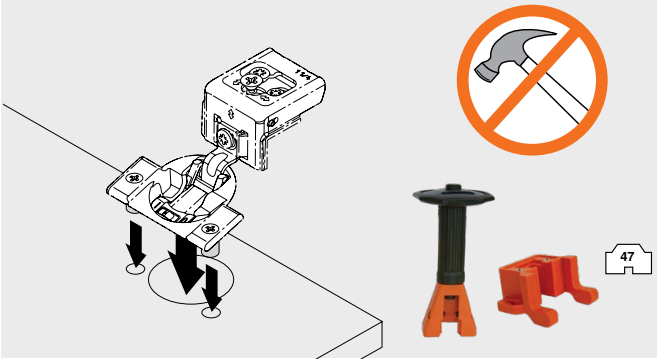

Mounting plate attachment

30C series – wraparound/edge mount

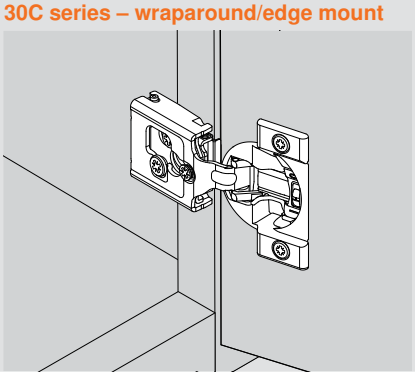

31C series – wraparound

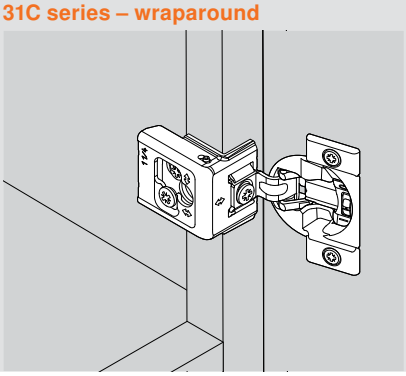

Minimum reveal

A minimum reveal per door is required to keep the door from binding and varies depending on door thickness.

See minimum reveal table for each hinge.

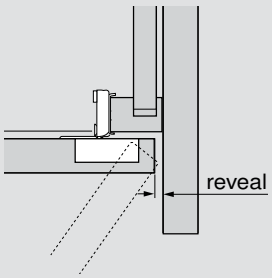

Hinge cup centerpoint

Hinge cup centerpoint and MINIPRESS setback position is **20.5** (13/16") for COMPACT CLIP hinges.

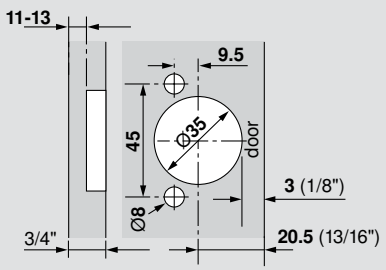

NOTE: Maximum door thickness 3/4"

Hinges per door

This chart can serve as a guide for determining the number of hinges per door. Note that door weight can also determine the number of hinges required.

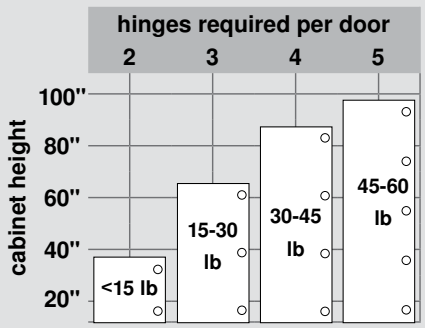

NOTE: The distance between the top and bottom hinges must be greater than the width of the door

 © 2025 Blum, Inc.

Clip features

With COMPACT CLIP, doors can be removed and reattached quickly and tool free. Not only does this save installers time on the jobsite, it also reduces the risk of damage to the cabinet frame.

Hinge attachment

Step 1: Slide hinge onto CLIP plate until hinge clips in place.

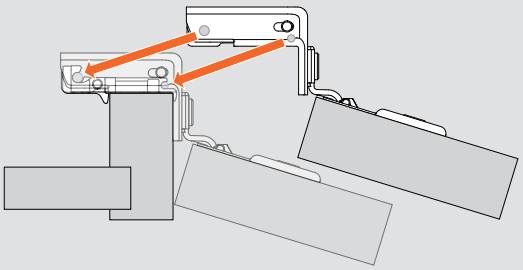

Hinge removal

Step 1: Locate CLIP release lever on back of hinge(A) and press down to release(B).

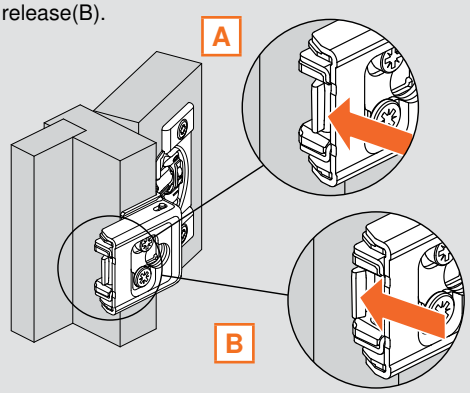

Step 2: While the CLIP lever is released, pull forward on hinge / door to remove from cabinet.

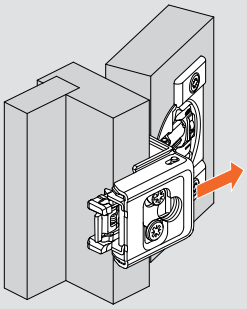

Cam height adjustment

Not only does the height setting remain unchanged as doors are attached and removed, a cam height adjustment is now available. This allows for the maximum adjustment range without needing to be centered in an elongated hole.

All adjustments now have markings stamped on the hinge near their corresponding screw head.

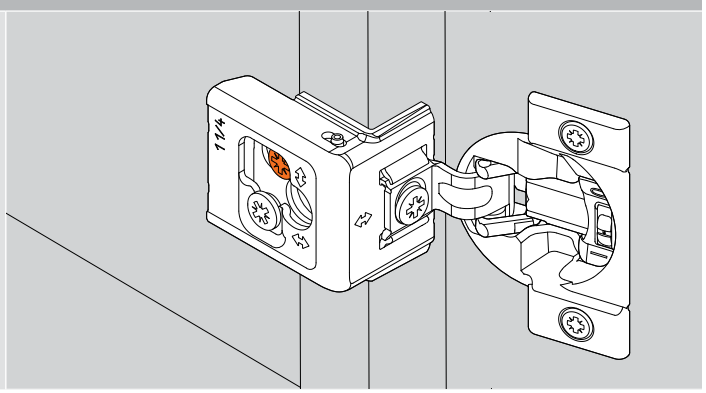

© 2025 Blum, Inc. Subject to technical modifications without notice

Three-dimensional cam adjustment

Side adjustment

Rotate the front cam screw to increase or decrease door overlay (± 1/16")

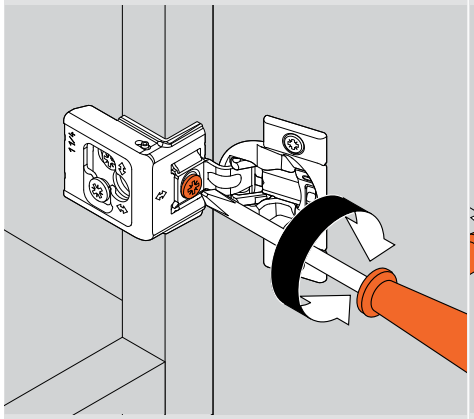

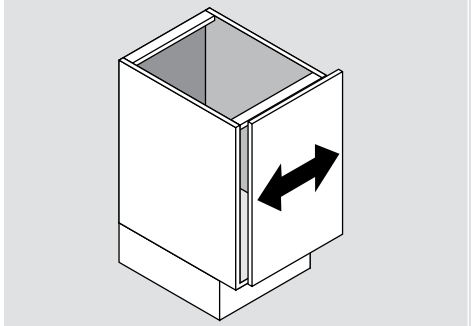

Height adjustment

Rotate this cam screw to increase or decrease the height (± 5/64")

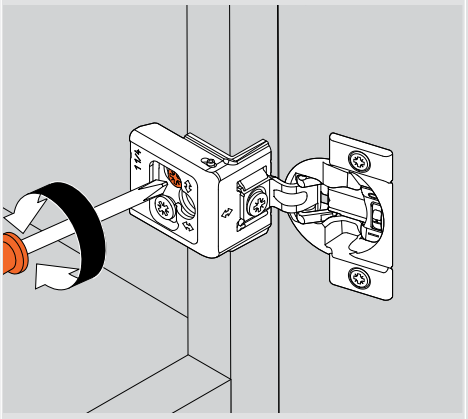

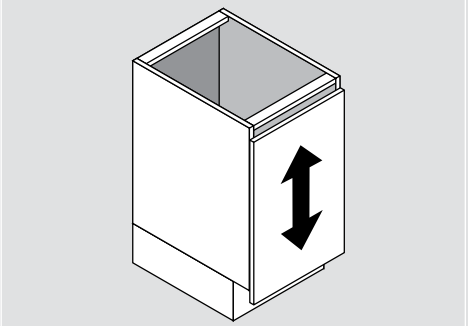

Depth adjustment

Rotate this cam screw to adjust door gap (+ 3/32", - 1/32")

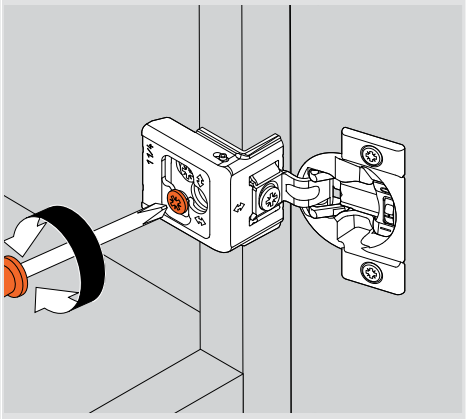

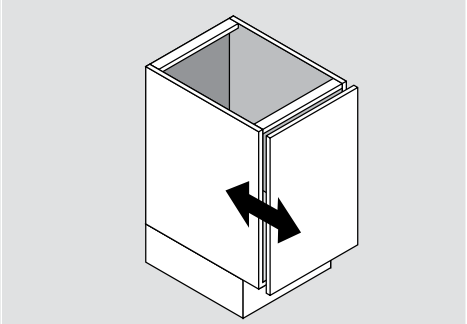

BLUMOTION Deactivation

Deactivation switch on the hinge cup

For small or light doors, the BLUMOTION can be deactivated on one of the hinges. COMPACT CLIP comes in the activated position, marked with a "I". The deactivated position is marked with a "0".

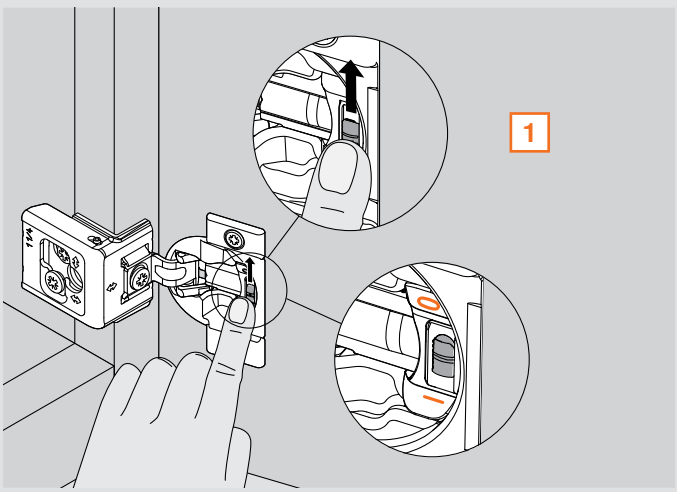

The door must be closed once for the deactivation to be complete. To reactivate, move switch back to the original position "I".

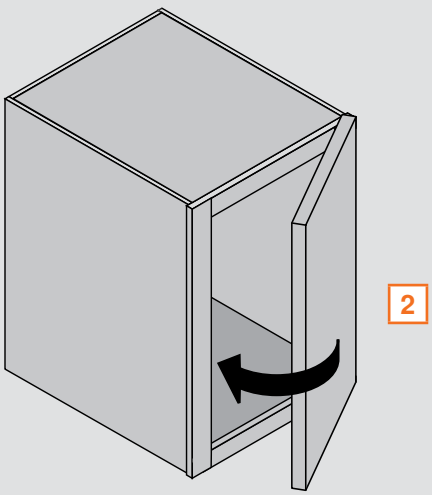

 © 2025 Blum, Inc.

COMPACT CLIP 30C2
for Partial Overlay



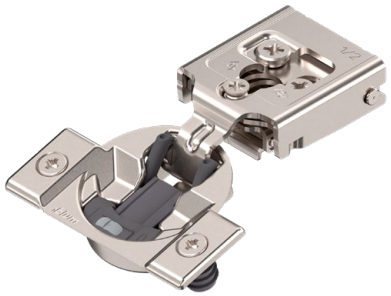

Features

- Utilizes Blum's CLIP technology
- BLUMOTION integrated into the hinge cup
- Deactivation switch for small/light doors
- Overload safety feature
- Three-dimensional cam adjustment with directional arrows for easy and precise adjustability
- 7/16" cup depth
- Edge mount available in 1/2" overlay
- Custom logo cover cap available

Minimum Reveal

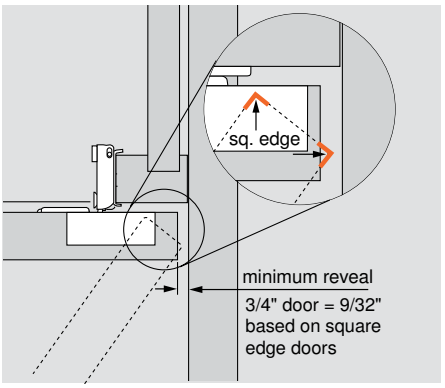

Boring pattern

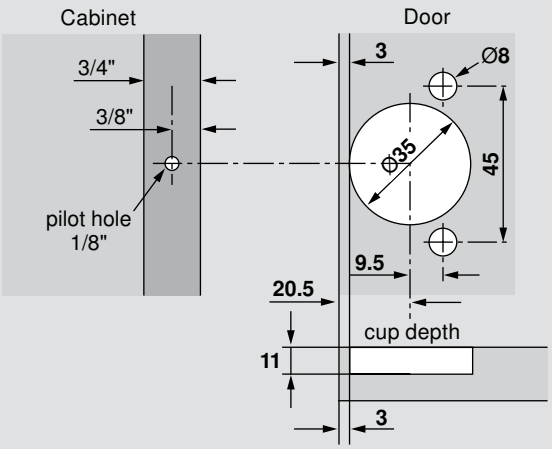

NOTE: Maximum door thickness 3/4"

Dimensions

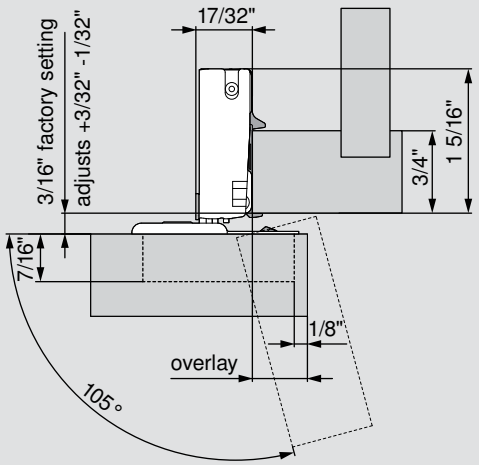

Adjustments

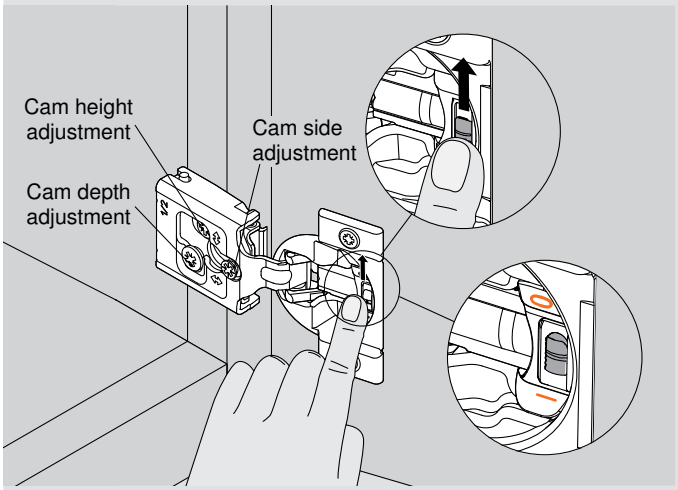

NOTE: COMPACT BLUMOTION comes in the activated position, marked with a "I" – the deactivated position is marked with a "0"

Wraparound and edge mount hinges

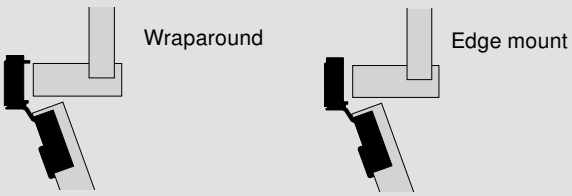

Overlay	Door protrusion	Screw-on	47 Press-in
Wraparound			
5/16"	5/16"		30C258B.05
3/8"	1/4"	30C255B.06	30C258B.06
1/2"	1/8"	30C255B.08	30C258B.08
5/8"	0	30C255B.10	30C258B.10
3/4"	0	30C255B.12	30C258B.12
Edge mount			
1/2"		30C255B.E8	30C258B.E8

Accessories

Angle restriction clip	38C315B3.1
Hinge cup spacer	38C355B9
*Blank cover cap	30C2508

*See page 13 for additional cover cap options

© 2025 Blum, Inc. Subject to technical modifications without notice



COMPACT CLIP 31C3 for Full Overlay



Features

- Utilizes Blum's CLIP technology
- BLUMOTION integrated into the hinge cup
- Deactivation switch for small/light doors
- Overload safety feature
- Three-dimensional cam adjustment with directional arrows for easy and precise adjustability
- 1/2" cup depth
- Less minimum reveal
- Custom logo cover cap available

Minimum Reveal

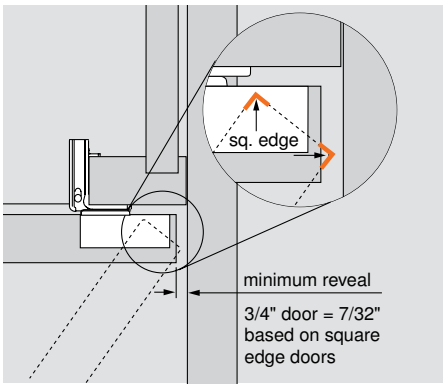

Boring pattern

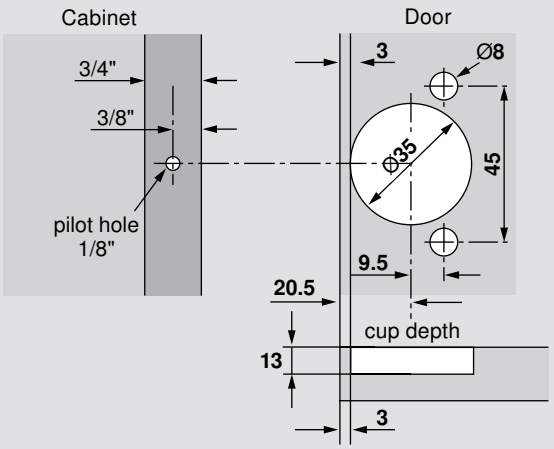

NOTE: Maximum door thickness 3/4"

Dimensions

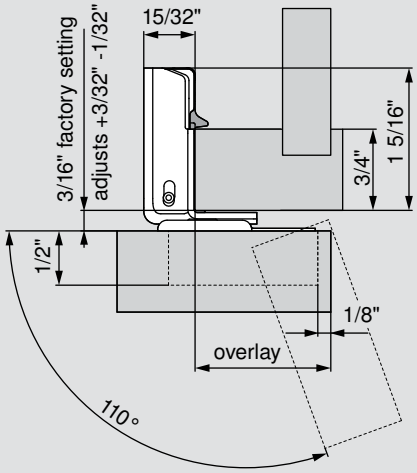

Adjustments

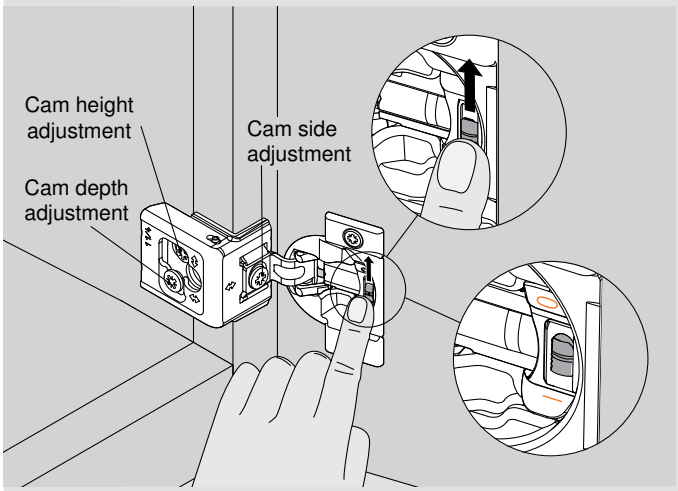

NOTE: COMPACT BLUMOTION comes in the activated position, marked with an "I" – the deactivated position is marked with a "0"

Wraparound hinges

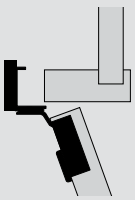

Overlay	Screw-on	47 Press-in
1"	31C355B.16	31C358B.16
1-1/4"	31C355B.20	31C358B.20
1-5/16"	31C355B.21	31C358B.21
1-3/8"	31C355B.22	31C358B.22
1-1/2"	31C355B.24	31C358B.24
1-9/16"		31C358B.25

Accessories

Angle restriction clip	38C315B3.1
Hinge cup spacer	38C355B9
*Blank cover cap	31C1508

*See page 13 for additional cover cap options

 © 2025 Blum, Inc.

COMPACT CLIP 31C1
for Full Overlay

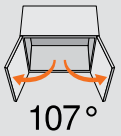



Features

- Utilizes Blum's CLIP technology
- BLUMOTION integrated into the hinge cup
- Deactivation switch for small/light doors
- Overload safety feature
- Three-dimensional cam adjustment with directional arrows for easy and precise adjustability
- 7/16" cup depth
- Ideal for profiled doors
- Custom logo cover cap available

Minimum Reveal

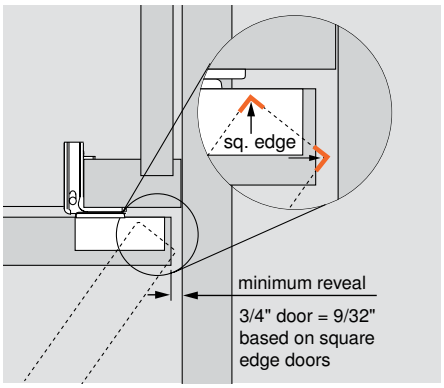

Boring pattern

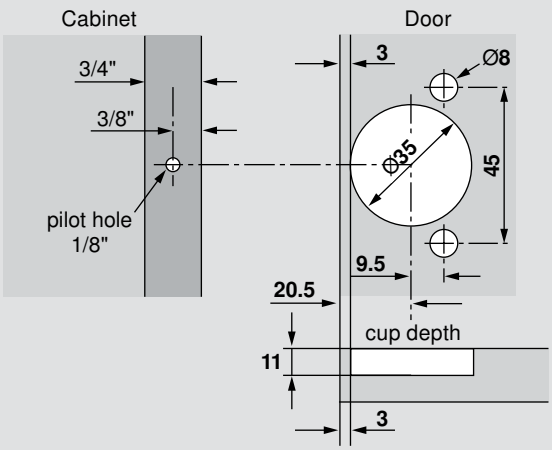

Dimensions

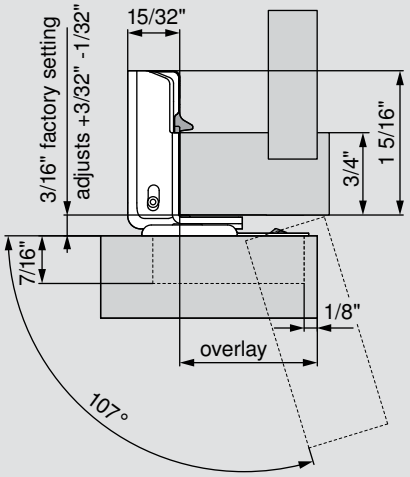

NOTE: Maximum door thickness 3/4"

Adjustments

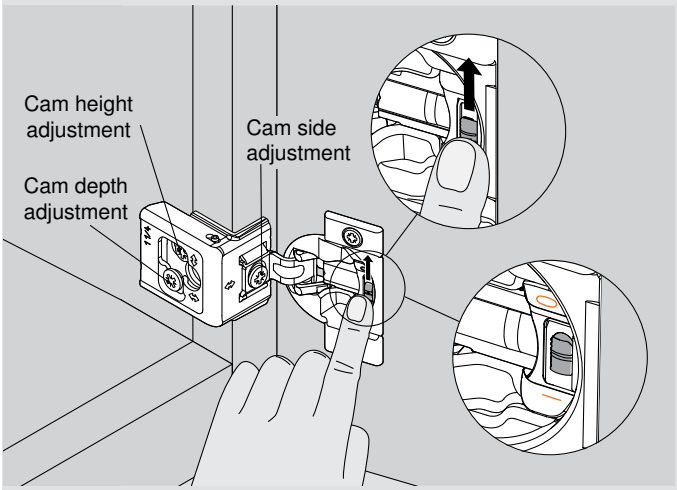

NOTE: COMPACT BLUMOTION comes in the activated position, marked with an "I" – the deactivated position is marked with a "0"

Wraparound hinges

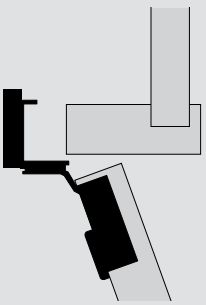

Overlay	Screw-on	47 Press-in
1-1/4"		31C158B.20

Accessories

Angle restriction clip	38C315B3.1
Hinge cup spacer	38C355B9
*Blank cover cap	31C1508

*See page 13 for additional cover cap options

© 2025 Blum, Inc. Subject to technical modifications without notice

Hinge arm cover caps



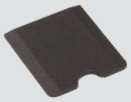

30C blank cover cap



30C Blum logo printed cover cap



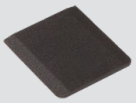

31C blank cover cap



31C Blum logo printed cover cap

- Nylon, deep gray cap
- Available blank or printed (Blum logo)
- Also available with printed custom logo (minimum order quantity applies)

	Part no.
30C blank cover cap	30C2508
30C Blum logo printed cover cap	30C2508.BL
31C blank cover cap	31C1508
31C Blum logo printed cover cap	31C1508.BL

Angle restriction clip

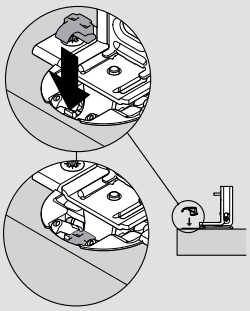



- Restricts opening angle of the COMPACT CLIP to 86°
- Angle restriction clip must be inserted before the hinge has been attached to the face frame
- Gray nylon

	Part no.
Angle restriction clip	38C315B3.1

Hinge cup spacer

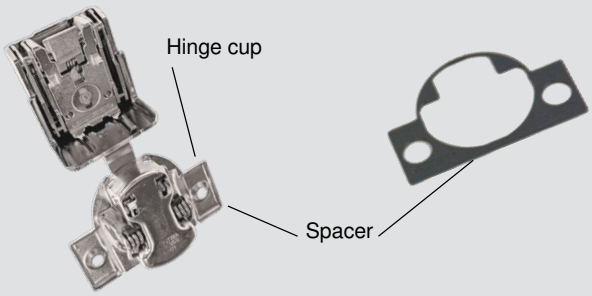

- 1/16“ spacer for use under the hinge cup for thin or profile doors
- Non-stackable
- Gray nylon

	Part no.
Hinge cup spacer	38C355B9

Distance spacer

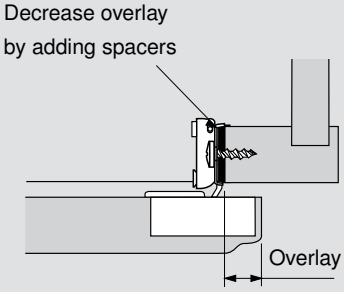



- Steel spacer decreases door overlay in 1/32“ increments
- Can be stacked to achieve desired overlay reduction
- Steel, zinc-coated

	Part no.
Distance spacer	36.3515

 © 2025 Blum, Inc.

POZI DRIVER and bits



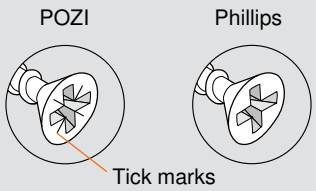

A POZI screwdriver (different from Phillips) is the most crucial tool you can use to assure that full torque is applied to all Blum adjustment screws. POZI screws can be identified by the distinctive “tick” marks located in the center of the screw head recess.

	Part no.
#2 POZI DRIVER	POZI DRIVER
1/4" Magnetic bit holder	BIT HOLDER
#2 x 1" POZI bit insert	POZI BIT #2X1
#2 x 2" POZI bit insert	POZI BIT #2X2

Ø8 mm dowels

- Square head dowel for attaching to hinges

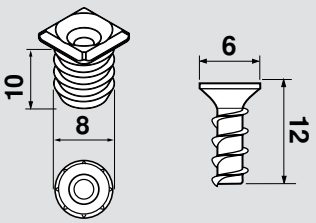

	Part no.
Ø8 mm dowel	30C2582
Installation screw	60A.122

Deep thread wood screws

- For attaching the hinge cup



	Part no.
#6 x 5/8", #2 Phillips	606N
#6 x 5/8", #2 POZI	606P

© 2025 Blum, Inc. Subject to technical modifications without notice

MINIPRESS P – Deluxe boring and insertion machine

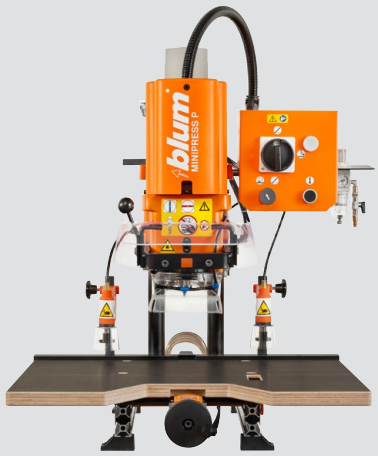

- Front adjustable boring distance with digital counter
- Pneumatic hold-down clamps
- Boring depth adjustment
- Ruler stops (qty 4)
- Tool kit included
- Dust collection attachment
- Optional laser center line set
- Accepts new 8 or 9 spindle heads

	Part no.
Single phase – 220V power	**M53.2053*US**
Three-phase – 220V power	**M53.2004*US**

MINIPRESS M – 110V manual boring and insertion machine



- 110V power with molding plug (portable)
- Does not require pressurized air
- Ruler stops (qty 4)
- Tool kit included
- Dust collection attachment
- Accepts new 8 or 9 spindle heads

	Part no.
Single phase – 110V power	**M52.1056*US**

Machine drill bits

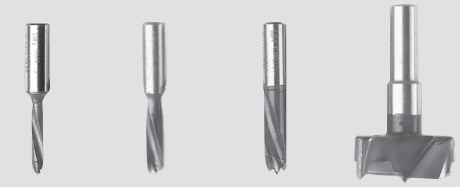

Ø**5** mm Ø**8** mm Ø**10** mm Ø**35** mm

NOTE: Machine drill bits need to be set to **57** mm in length to achieve proper bore depth.

	Part no.
Ø**5** mm drill bit (right handed)	**M01.ZB05.D2 R**
Ø**5** mm drill bit (left handed)	**M01.ZB05.D3 L**
Ø**8** mm drill bit (left handed)	**M01.ZB08.03 L**
Ø**10** mm drill bit (right handed)	**M01.ZB10.02 R**
Ø**10** mm drill bit (left handed)	**M01.ZB10.03 L**
Ø**10** mm drill bit for mineral composites/HPL (right handed)	**M01.ZB10.T2 R**
Ø**10** mm drill bit for mineral composites/HPL (left handed)	**M01.ZB10.T3 L**
Ø**20** mm drill bit (right handed)	**M01.ZB20.02 R**
Ø**35** mm drill bit (right handed)	**M01.ZB35.02 R**

COMPACT hinge insertion ram



- Can be used for inserting all Blum COMPACT press-in hinges

#47 insertion ram	**MZM.0047**

 © 2025 Blum, Inc.

Part Number Index

Part no.	Page no.
30C255B.06	10
30C255B.08	10
30C255B.10	10
30C255B.12	10
30C255B.E8	10
30C258B.05	10
30C258B.06	10
30C258B.08	10
30C258B.10	10
30C258B.12	10
30C258B.E8	10
30C2508	10, 13
30C2508.BL	13
30C2582	14
31C158B.20	12
31C355B.16	11
31C355B.20	11
31C355B.21	11
31C355B.22	11
31C355B.24	11
31C358B.16	11
31C358B.20	11
31C358B.21	11
31C358B.22	11
31C358B.24	11
31C358B.25	11
31C1508	11, 12, 13
31C1508.BL	13
36.3515	13
38C315B3.1	10, 11, 12, 13
38C355B9	10, 11, 12, 13
60A.122	14
606N	14
606P	14
BIT HOLDER	14
M01.ZB05.D2 R	15
M01.ZB05.D3 L	15
M01.ZB08.03 L	15
M01.ZB10.02 R	15
M01.ZB10.03 L	15
M01.ZB10.T2 R	15
M01.ZB10.T3 L	15
M01.ZB20.02 R	15
M01.ZB35.02 R	15
M52.1056*US	15
M53.2004*US	15
M53.2053*US	15
MZM.0047	15
POZI BIT #2X1	14
POZI BIT #2X2	14
POZI DRIVER	14

© 2025 Blum, Inc. Subject to technical modifications without notice

> Connect With Us on Social Media

Be sure to connect with us on social media for additional resources for information regarding tips on installation, maximizing storage space, new products and other news and events going on inside Blum.

Find us by searching **"Blum USA"** in the search bar.



 © 2025 Blum, Inc.


blum



Why Choose Blum

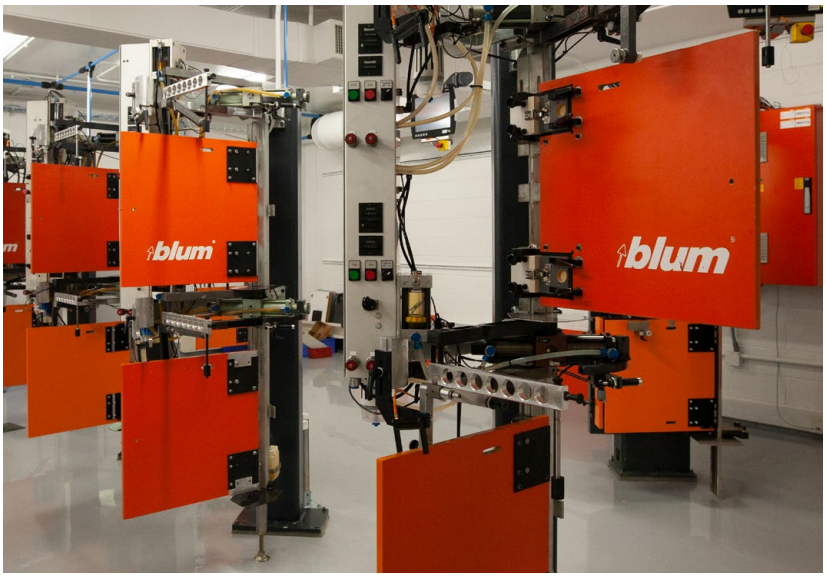

The Blum name stands for quality, innovation and great customer service. We manufacture hardware that makes working in the kitchen easier, no matter the age of the user, and we do this globally. We've been in the United States for more than 40 years, and we are committed to manufacturing for the American market. Blum supports the United States market with a network of distributors, knowledgeable Blum sales representatives and an experienced customer service department. Each of our products has been designed carefully, with the customer experience in mind. We have a deep commitment to research and believe anyone who manufactures, sells, installs or uses our products should benefit from our knowledge and experience. We specialize in engineering and manufacturing concealed hinges, drawer systems and systems for lift-up doors. From our touch-to-open technology, to the soft-closing door or drawer, our hardware helps modernize the kitchen experience.

To learn more about Blum, visit blum.com/tour

ISO 9001
Certified Quality System

Blum, Inc. is ISO 9001 certified which means that you are assured of consistent quality in every Blum product. They exceed the requirements of ANSI/BHMA standards for cycle life, static load and self-closing performance.

Please visit blum.com for information on other Blum products
LIT.HNG1800.05.2025 Ident. 01051005 © 2025 Blum, Inc.

Blum, Inc.
7733 Old Plank Rd.
Stanley, NC 28164
800-438-6788
blum.com

ISO 9001
Certified Quality System

blum®