KIT INSTRUCTIONS - R001 & R002
TANDEM plus BLUMOTION (soft close) 18” & 21”
Concealed undermount runners

Scan the QR code for instruction sheets, videos and other helpful resources.

Kit contains

1pair

TANDEM plus BLUMOTION (soft close) concealed undermount runners, 1 pair includes L & R

1ct

Locking device (L)

1ct

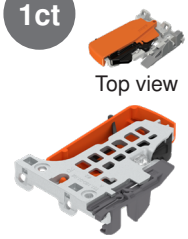

Locking device (R)

2ct

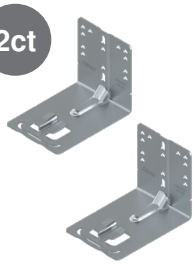

Rear mounting brackets

24ct*

#6 x 5/8” Phillips wood screws

WARNING: CHOKING HAZARD — Small parts. Not for children under 3 years.

Tools (not included)

Cordless drill (Required)

#2 Phillips head bit (Required with drill)

6 mm drill bit (For pre-drilling)

2.5 mm drill bit (For pre-drilling)

#2 Phillips Screwdriver (Required)

Extension chuck (Recommended for accuracy)

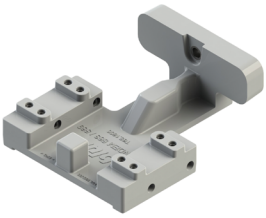

Concealed runner template (optional)

Note: This template is an assembly aid for the pre-drilling of TANDEM locking device screw holes and rear hook holes.

*Includes extra screws. Refer to instructions for exact quantity.

Includes AI-generated tool image(s). © 2025 Blum, Inc.

1. Calculate dimensions for your drawer box

1a. Measure the opening width (OW) of your cabinet.

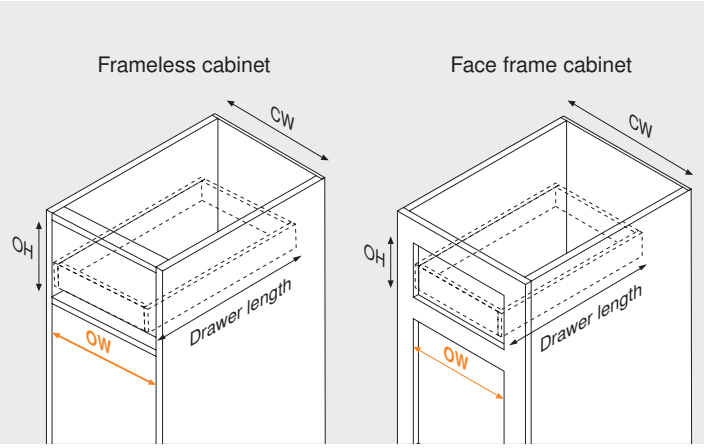

1b. Measure drawer space opening height (OH).

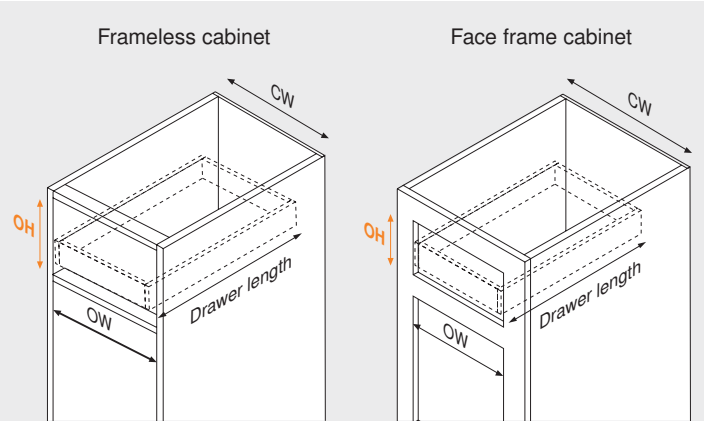

1c. Your drawer box length is determined by the length of the runner.

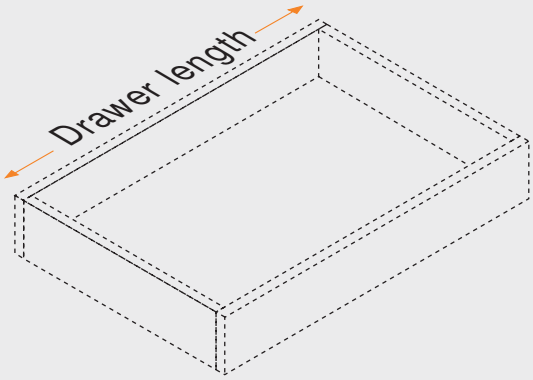

R001
457 mm (18”)

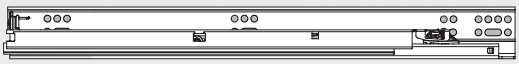

R002
533 mm (21”)

© 2025 Blum, Inc.

1d. Take the opening width (OW) and subtract 42 mm (1-21/32”) to get the inside drawer width.This method is recommended for accuracy.

NOTE: Illustration to the right shows a drawer front view.

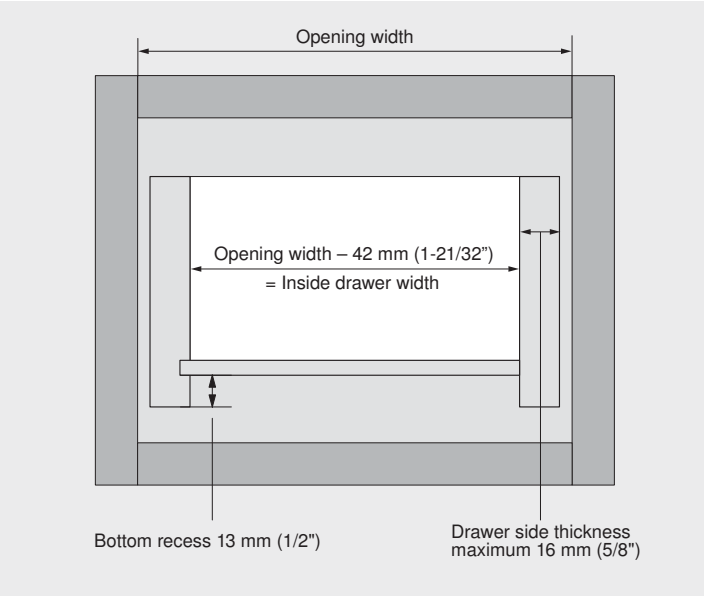

1e. Take the opening height (OH) and subtract 21 mm (13/16”) to get the maximum drawer height. The minimum top clearance for your drawer is 7 mm (9/32”) and the bottom clearance is 14 mm (9/16”).

NOTE: Illustration to the right shows a drawer front view.

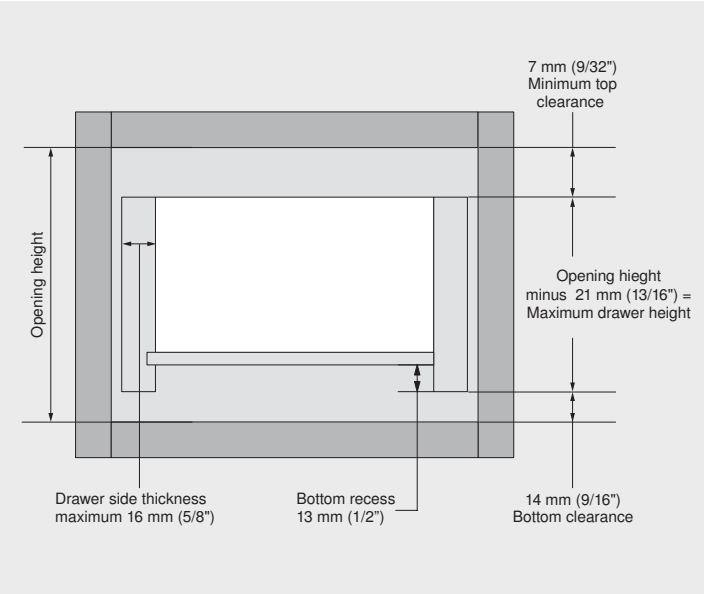

1f. Build your drawer box based on the dimensions you calculated.

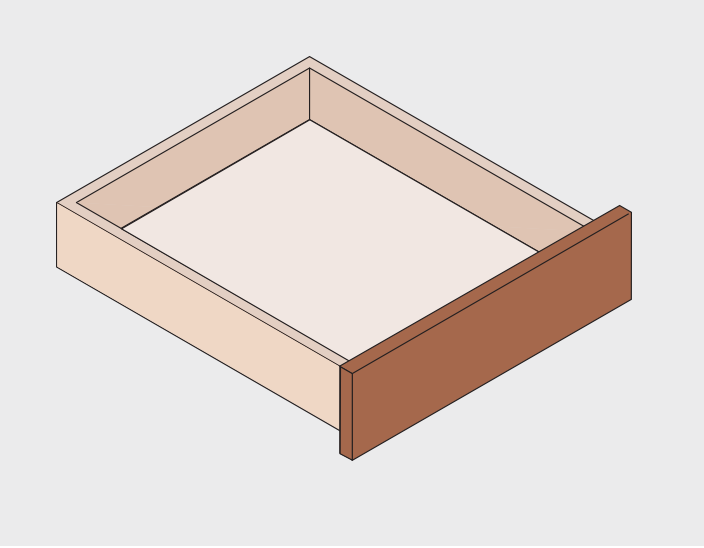

© 2025 Blum, Inc.

2. Prepare your drawer box

2a.

Cut out notches from the bottom rear of your drawer box, on both the left and right.

Tool: Your preferred cutting tool

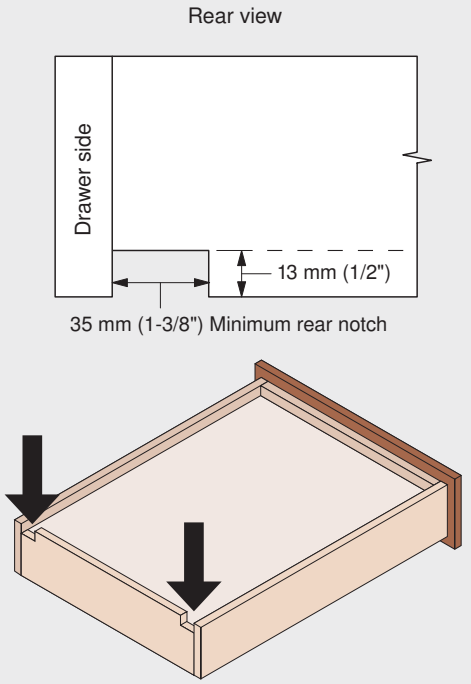

2b.

Drill for rear hook holes.

Use 6 mm drill bit to drill holes on the back left of your drawer box at the specified location shown in the drawing. Repeat for the back right.

Tool: Use 6 mm drill bit

NOTE: It is recommend that you use a stop collar for accuracy and to avoid drilling through the back of your drawer box.

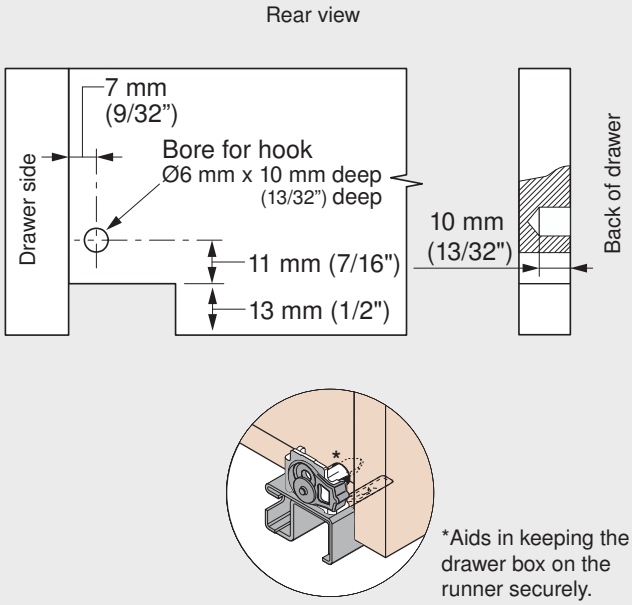

Alt. 2b.

For accurate locating and drilling, you can use the concealed runner template (Kit A001) and 6 mm drill bit.

Ensure the middle of the template is flush against the drawer side (A), and the rear drilling hole guide is pushed up against the back of your drawer box (B).

Tool: Use 6 mm drill bit

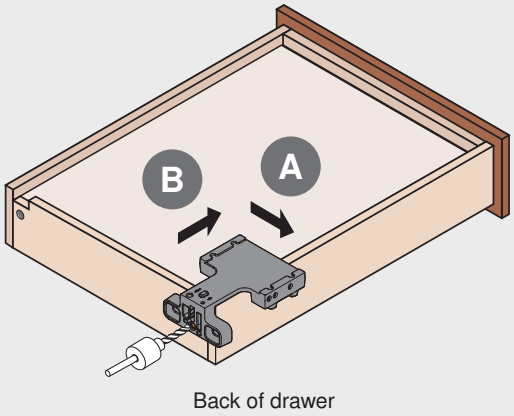

© 2025 Blum, Inc.

3. Install locking devices

3a. Place locking device (L) into the front left corner of your drawer box.

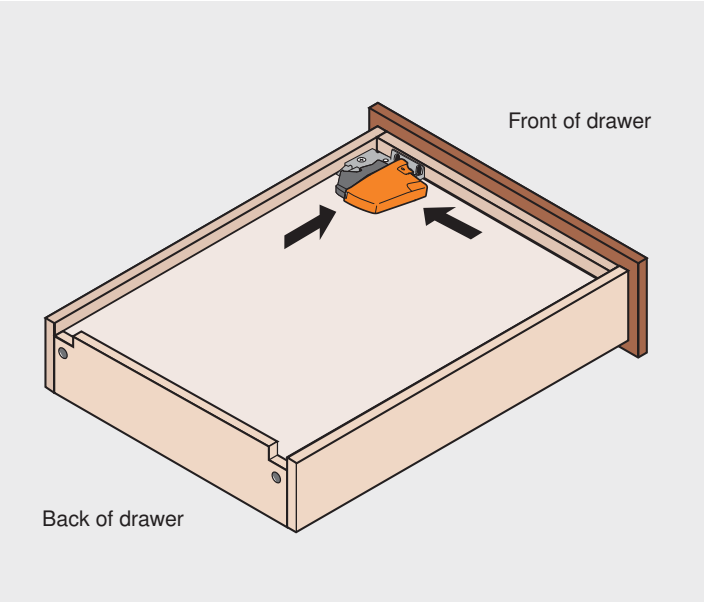

3b. Pre-drill with 2.5 mm drill bit at a 75° angle.

Tool: Use 2.5 mm drill bit

NOTE: For accuracy, it is recommended that you use an extension chuck and stop collar to drill only 10 mm (13/32”) deep.

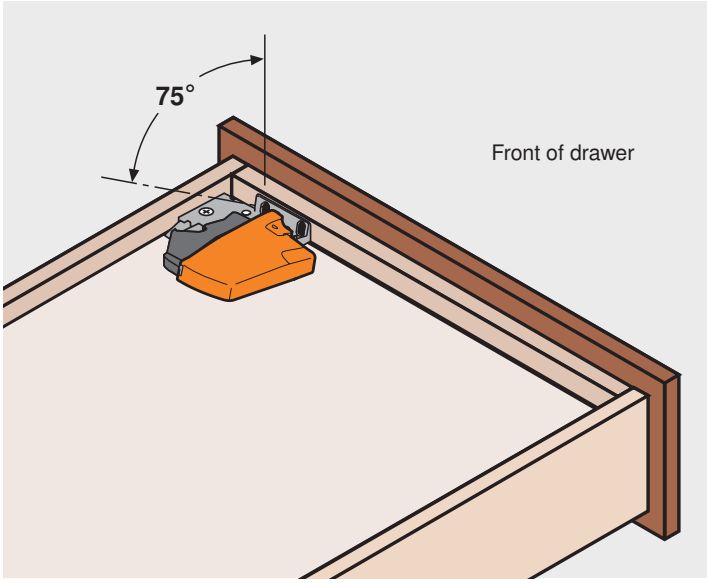

Alt. 3b. For accurate location of locking devices and drilling, you can use the concealed runner template. (Kit A001)

Place template into one of the front corners underneath your drawer box. Pre-drill with 2.5 mm drill bit and recommended extension chuck, if available.

Tool: Use 2.5 mm drill bit

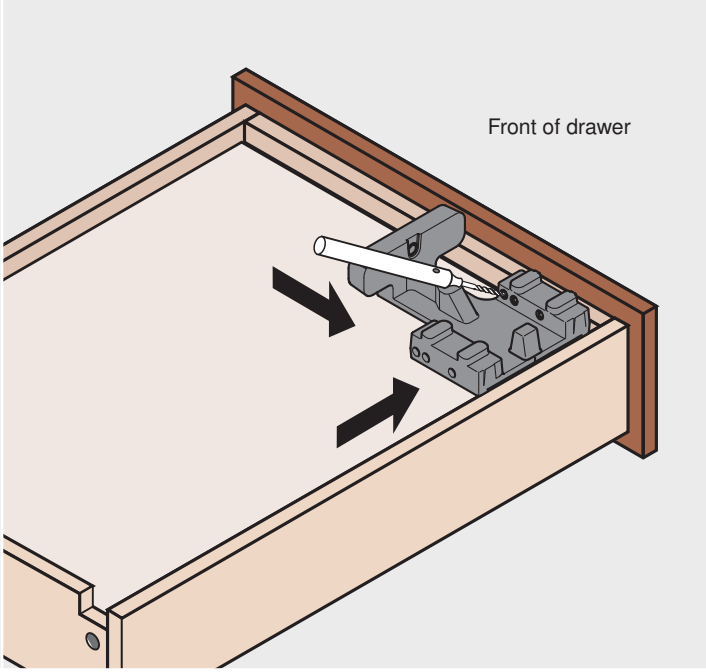

© 2025 Blum, Inc.

3c. Install locking device with included #6 x 5/8” wood screws (2ct).

Tool: Use #2 Phillips head bit

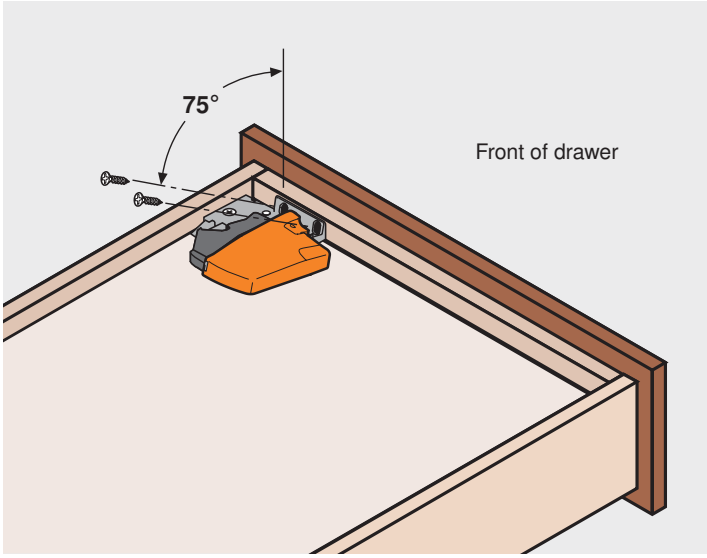

3d. Repeat steps 3a to 3c for locking device (R) into the front right corner of your drawer box.

3e. Set drawer box aside and proceed to the next step.

4. Install rear mounting brackets

NOTE: Rear mounting brackets are for face frame cabinets only. For frameless cabinets, skip to step 5c for runner installation.

4a. Confirm minimum clearance for rear mounting brackets: 12 mm (15/32”) behind the face frame stile and 3 mm (1/8”) below the face frame rail.

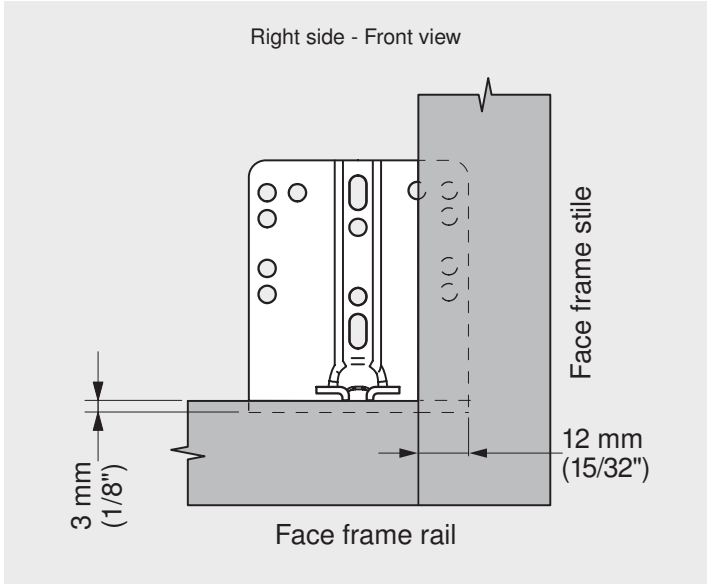

© 2025 Blum, Inc.

4b. Pre-drill two holes with 2.5 mm drill bit at mounting locations (highlighted in orange) to a depth less than 5/8” into the back panel of your cabinet.

Attach rear mounting brackets using included #6 x 5/8” wood screws (2ct).

Repeat for the other side of the back panel.

Tools: Use 2.5 mm drill bit (pre-drill)
#2 Phillips head bit

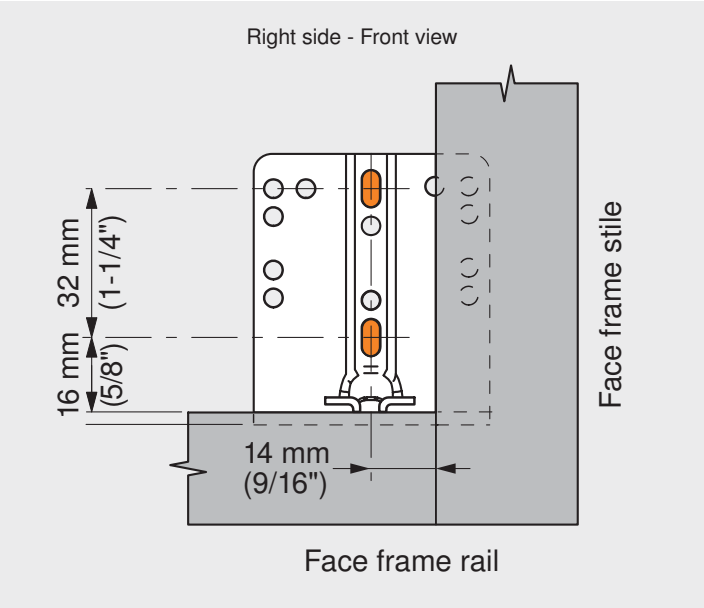

5. Install your runners

NOTE: Each steel runner is stamped with “L” for left or “R” for right in three locations on the runner profile for easy identification and correct installation.

5a. For face frame cabinets: Slide the runner onto the rear mounting bracket (highlighted in orange).

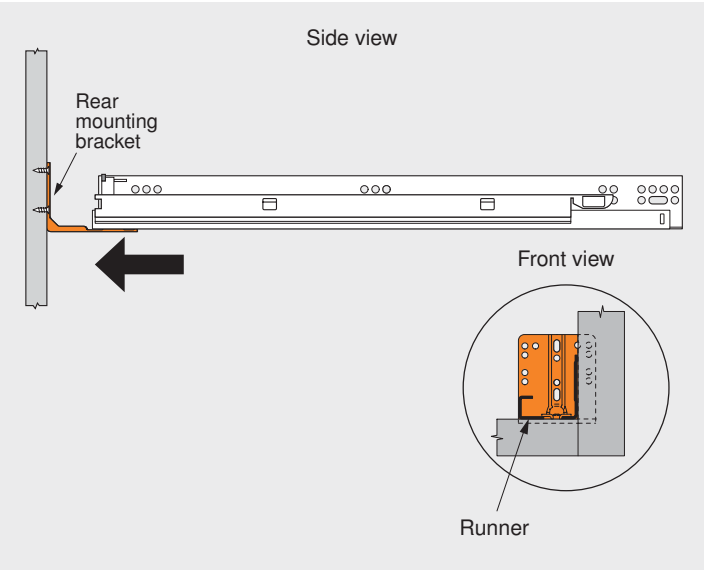

5b. Pre-drill holes at mounting locations (highlighted in orange) into the face frame, and attach the runner using included #6 x 5/8” wood screws (2ct).

Insert your first mounting screw 37 mm (1-15/32”) from the runner bottom and 10 mm (13/32”) from the cabinet face. Tighten the screw **after leveling** the runner. Then, insert the second screw and tighten.

Tools: Use 2.5 mm drill bit (pre-drill)
#2 Phillips head bit

NOTE: Orange dots indicate mounting screw locations required to meet specified load capacity.

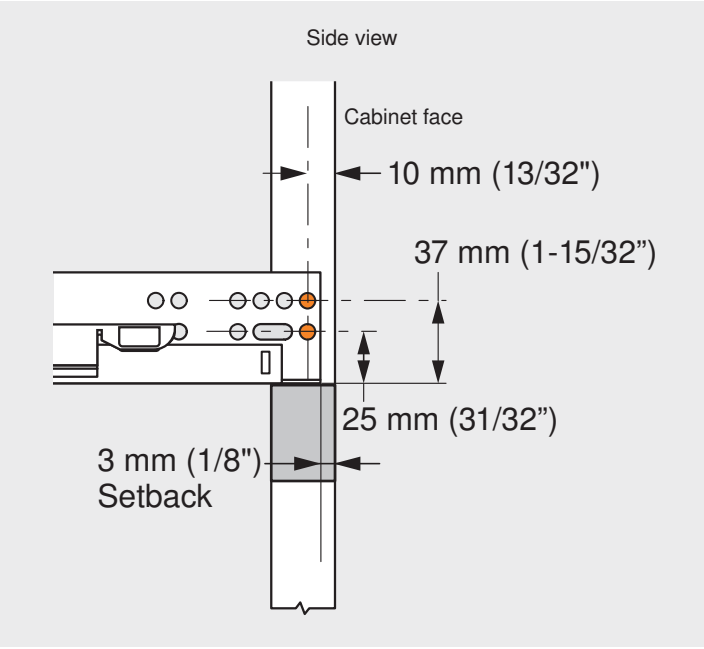

© 2025 Blum, Inc.

Add security screw to rear mounting bracket

Once your runner is installed and leveled, add a security screw (1ct) in the upper corner hole (highlighted in orange), located 21 mm (13/16”) from the center mounting screw.

Right side - Front view

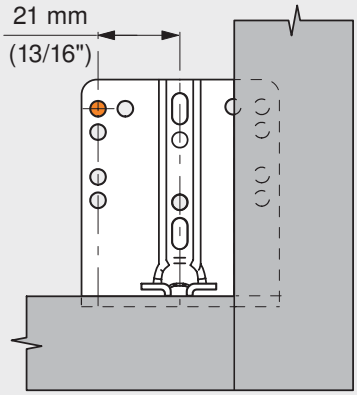

5c.

For frameless cabinets: Pre-drill holes at mounting locations shown below (highlighted in orange) and attach the runner using included #6 x 5/8” wood screws (5ct).

Insert the front mounting screw first to position the runner (A). **Level** the runner, then insert and tighten the back mounting screw. Continue by inserting and tightening the remaining screws.

Tools: Use 2.5 mm drill bit (pre-drill)
#2 Phillips head bit

NOTE: Orange dots indicate mounting screw locations required to meet specified load capacity.

Side view

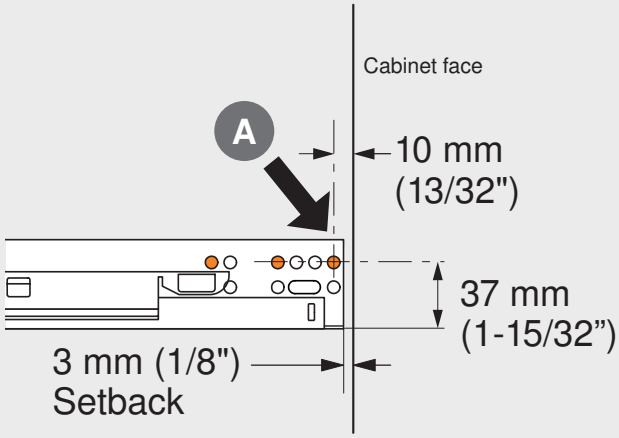

Enlarged side view of full runner profile (step 5c)

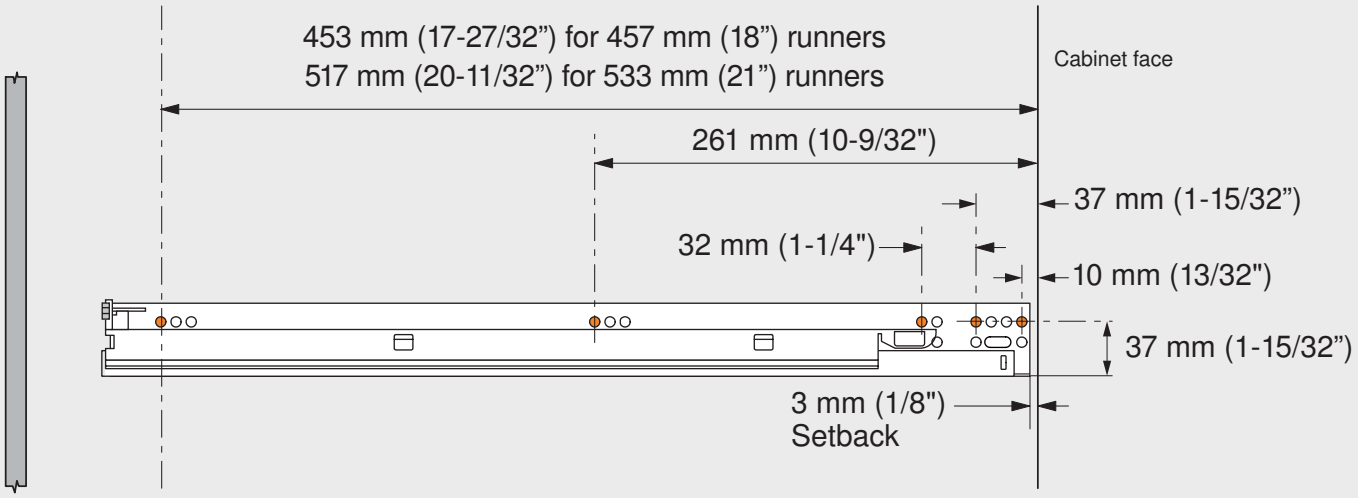

© 2025 Blum, Inc.

5d. After mounting runners to one side of the cabinet, install the runners on the other side.

NOTE: Images are for illustration purposes; actual dimensions may vary.

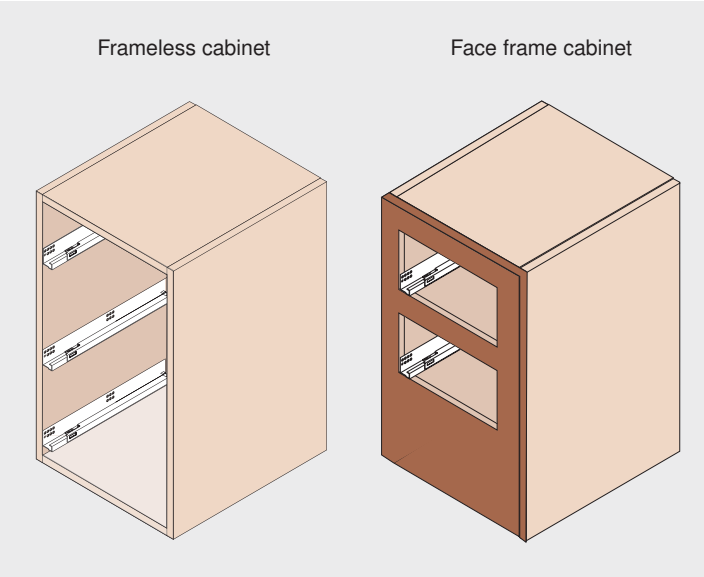

6. Insert drawer box

Fully extend both runners. Then, place your drawer onto the runners and push until the drawer is completely closed.

NOTE: Locking devices automatically engage with the runners.

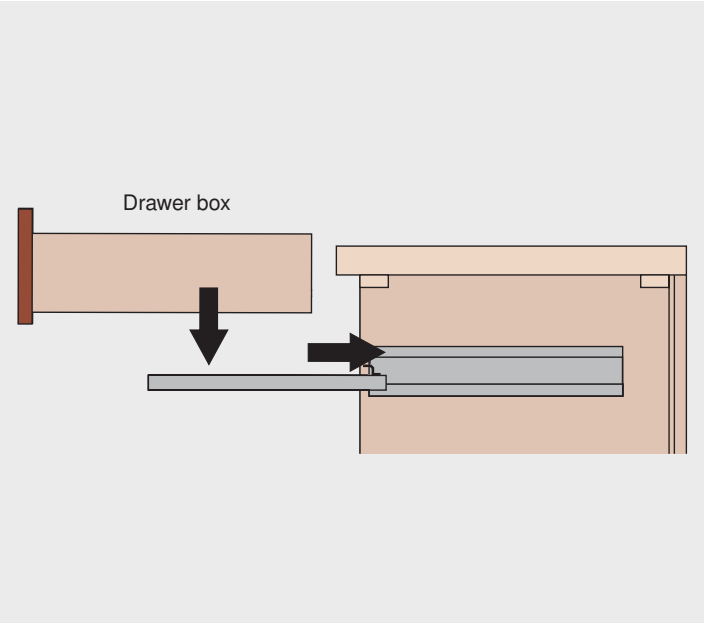

If needed: Drawer release

Squeeze orange handles on both locking devices (A). Then pull the drawer straight out and up off the runners (B).

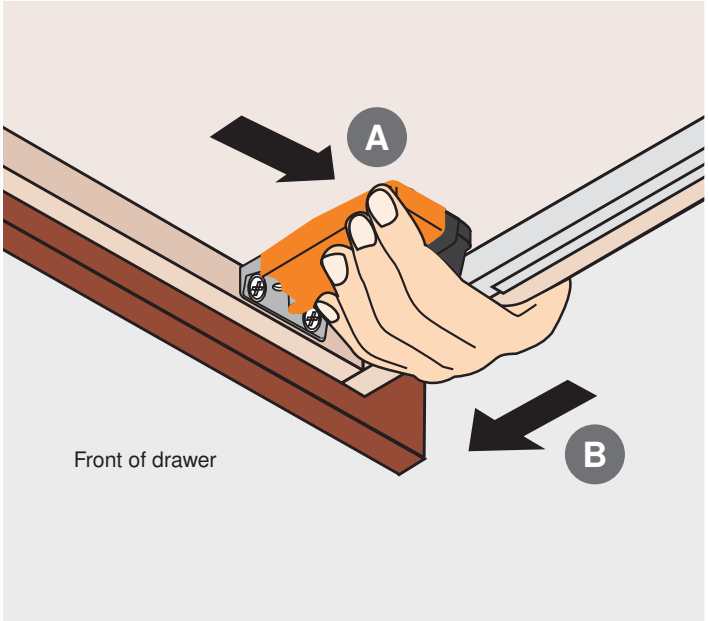

© 2025 Blum, Inc.

7. Make adjustments

7a.

Height adjustment: Reach under the drawer where the locking devices are located. Press up on the adjustment tab (A) and push toward the back of your drawer (B) until the desired height is reached.

Tool: No tool needed

NOTE: Range = +3 mm (1/8”) rise of drawer front

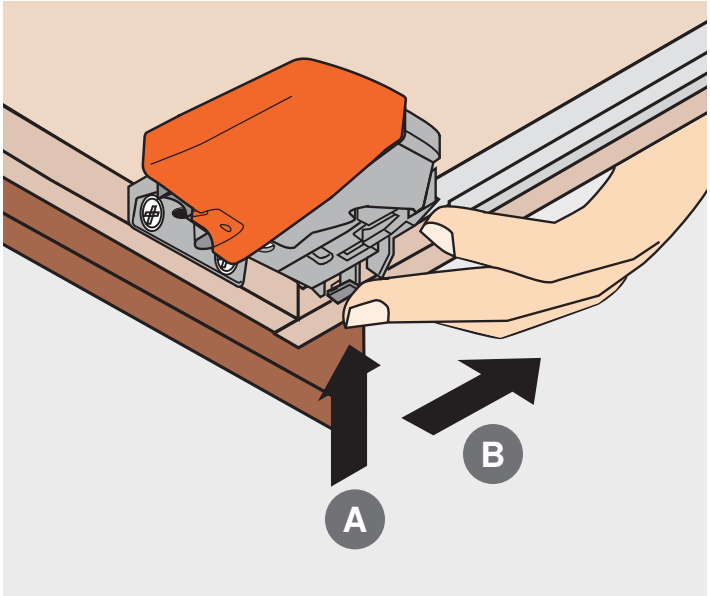

7b.

Tilt adjustment: First, remove your drawer by following the instructions for “Drawer release” on the previous page.

Then, locate and rotate the tilt adjustment lever (highlighted in orange) on the rear of each runner. This will lift the back of the drawer and tilt the top of the drawer front forward. Rotate the adjustment lever until the desired tilt is reached.

Tool: No tool needed

NOTE: Range = +5 mm (3/16”) rise of drawer back

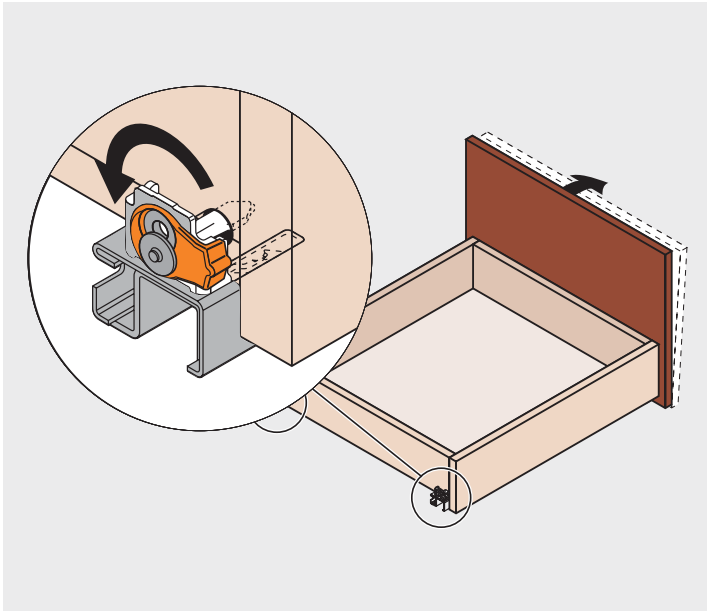

© 2025 Blum, Inc.