SPACE TWIN

Blum's ideas for narrow cabinets

www.blum.com

A practical solution for small storage spaces

Turn tiny spaces into valuable storage with SPACE TWIN. Blum's concept for narrow cabinets with diagonally offset runners creates additional storage space without compromising stability or quality of motion.

Blum's proven quality of motion

Blum's proven quality of motion is prominent in the SPACE TWIN narrow cabinet. Minimal opening force, a feather-light glide and adaptive BLUMOTION for soft and effortless closing guarantee top quality motion and enhanced ease of use. What's more, the cabinet can be fully extended, providing easy access to all contents.

High stability and load bearing capacity

Diagonally offset runners provide improved lateral stability and enable a high load bearing capacity of up to 20 kg per base cabinet.

Harmonious look

SPACE TWIN can be implemented with LEGRABOX, MERIVOBOX and TANDEMBOX box systems and with MOVENTO runner system. for a harmonious look.

Familiar adjustment and assembly ease

The use of standard fittings makes assembly and adjustment as straightforward as usual.

Diverse implementation options

SPACE TWIN can easily be implemented with Blum fittings from the existing range. The solution can be combined with LEGRABOX, MERIVOBOX and TANDEMBOX box systems and with MOVENTO runner system.

MERIVOBOX with BOXCOVER
Glass design elements capture the light and create a classy impression.

LEGRABOX

The linear and slim design of LEGRABOX can be used to its full advantage in narrow cabinet solutions. For cabinet widths from 185 mm to 250 mm.

TANDEMBOX antaro

The solution for narrow cabinets is also compatible with efficient TANDEMBOX antaro. For cabinet widths from 165 mm to 250 mm.

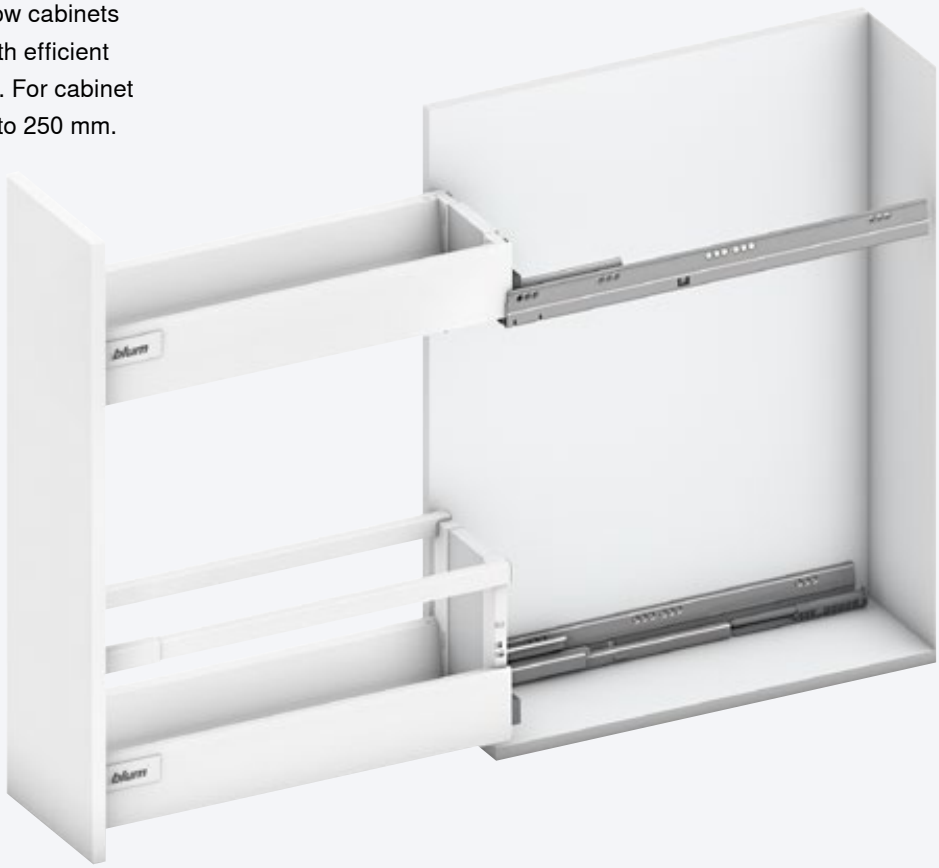

MERIVOBOX

MERIVOBOX also gives you a choice of different drawer side accessories for narrow cabinets. For cabinet widths from 130 mm to 250 mm.

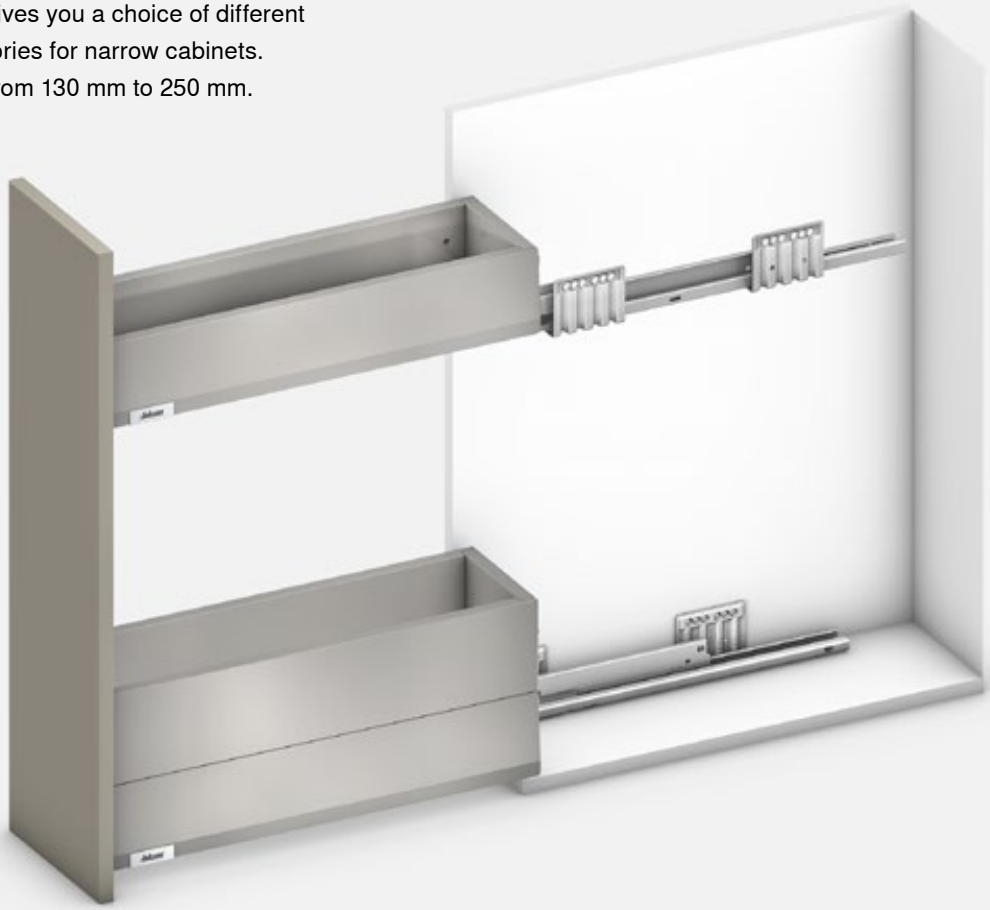

MOVENTO

MOVENTO's quality of motion is also prominent in SPACE TWIN. For cabinet widths from 180 mm to 250 mm.

Planning

Space requirements in the cabinet

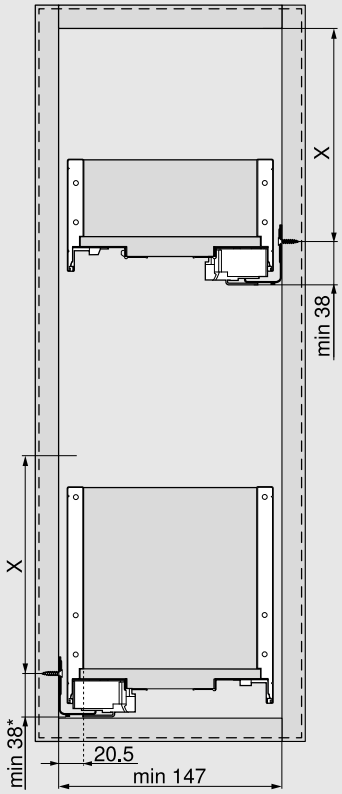

Height	X (mm)
M	68
K	106
C	155

* + 1 mm if cabinet profile is installed before cabinet assembly

Front dimensions

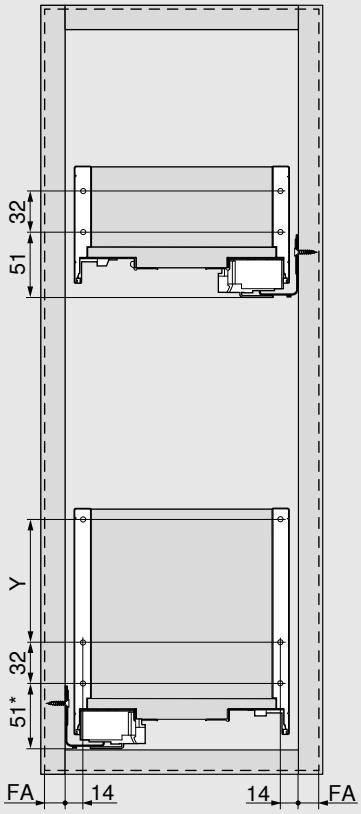

Height	Y (mm)
M	-
K	-
C	96

FA Front overlay

* + 1 mm if cabinet profile is installed before cabinet assembly

Planning

Back installation dimensions

Height M

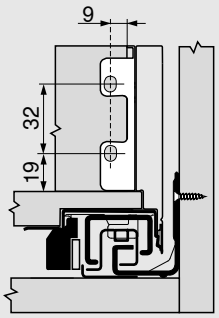

Height K

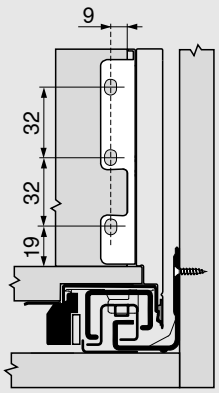

Height C

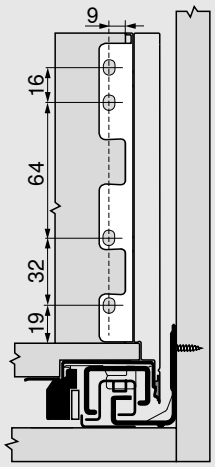

Cutting dimensions for 16 mm chipboard

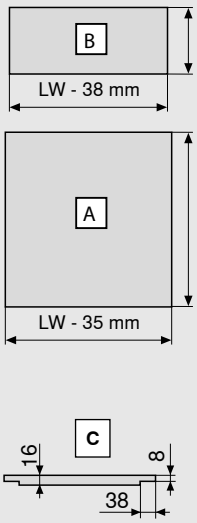

Chipboard back	B (mm)
Height M	63
Height K	101
Height C	148
Base length	**A (mm)**
Chipboard back	NL - 10
Rebate dimension	**C (mm)**

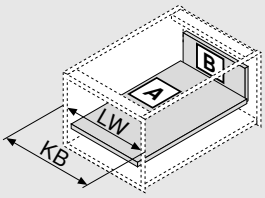

KB Cabinet width

LW Internal cabinet width

NL Nominal length

Note

For ordering information for standard LEGRABOX components, please see the respective product brochures or the catalogue.

More information on LEGRABOX

www.blum.com/legrabox

Planning

Space requirements in the cabinet

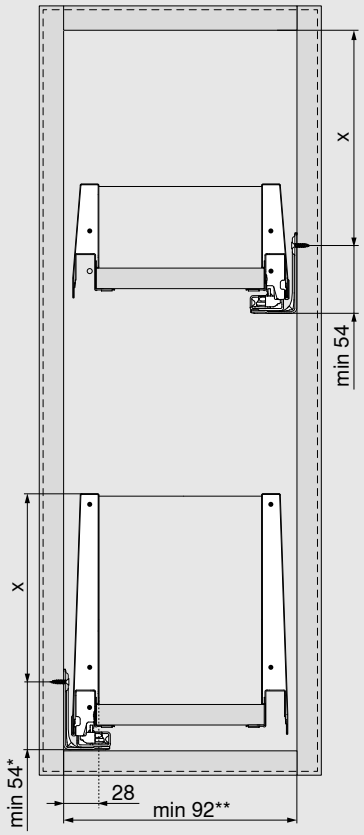

Height	X (mm)
M	54
K	92
E	155

* + 1 mm if cabinet profile is installed before cabinet assembly
** 112 mm with SERVO-DRIVE
142 mm with TIP-ON BLUMOTION

Front dimensions

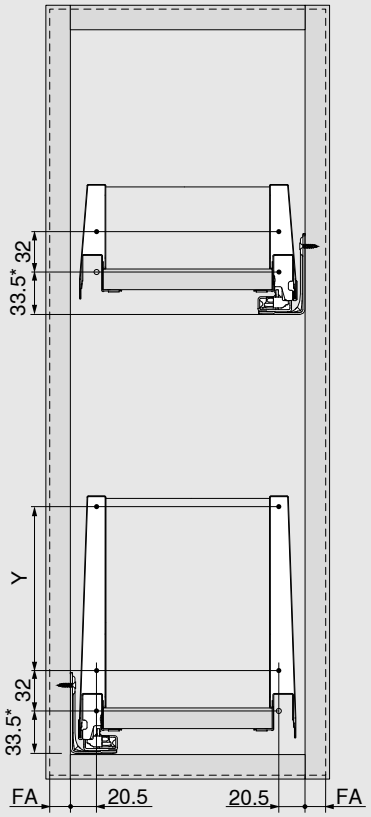

Height	Y (mm)
M	-
K	-
E	128

FA Front overlay

* + 1 mm if cabinet profile is installed before cabinet assembly

Planning

Back installation dimensions

Height M

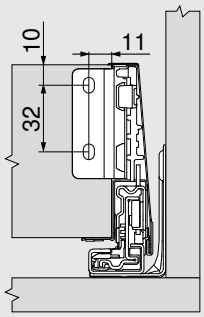

Height K

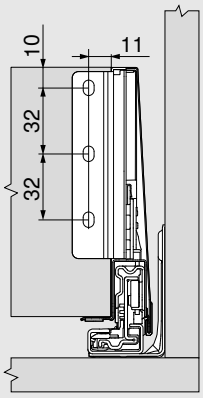

Height E

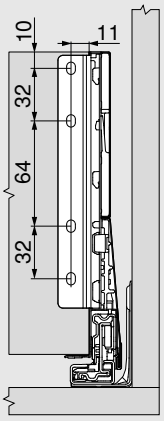

Cutting dimensions for 16 mm chipboard

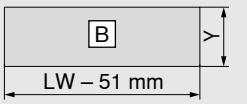

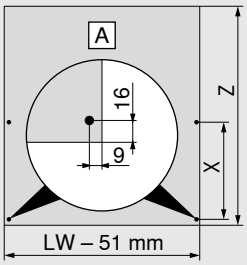

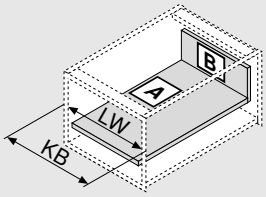

Chipboard back		Y (mm)
Height M		83
Height K		121
Height E		184
Base length		**Z (mm)**
Chipboard back		NL - 26
Position of drawer base drill hole		
Pre-drilling possible when using a flat headed screw	**NL (mm)**	**X (mm)**
	270	128
	300	128
	> 350	256
KB Cabinet width		
LW Internal cabinet width		
NL Nominal length		

Note

For ordering information for standard MERIVOBOX components, please see the respective product brochures or the catalogue.

More information on MERIVOBOX

www.blum.com/merivobox

Planning

Space requirements in the cabinet

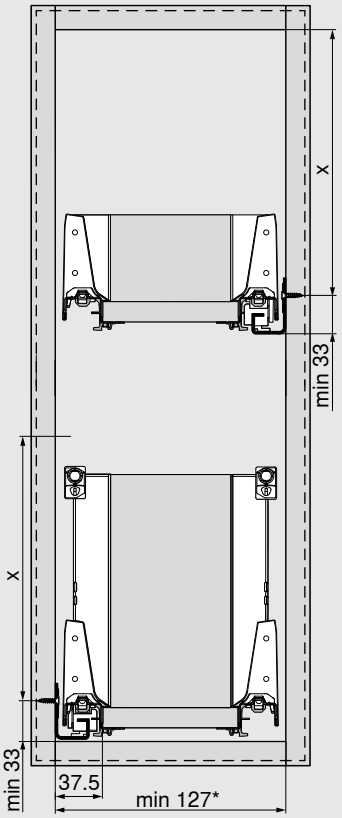

Height	X (mm)
M	65.5
K	97.5
C	159
D	191

* 147 mm with SERVO-DRIVE

Front dimensions

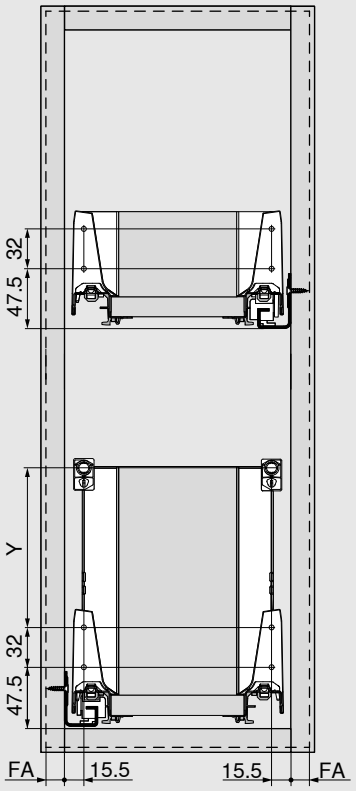

Height	Y (mm)
M	-
K	32
C	96
D	128
D on K drawer side	32/96

FA Front overlay

Planning

Back installation dimensions

Height M

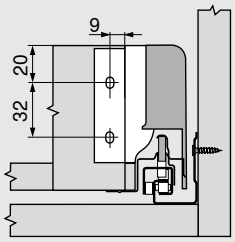

Height K

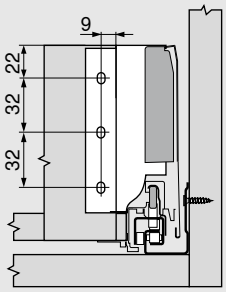

Height C

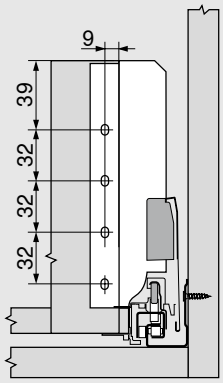

Height D

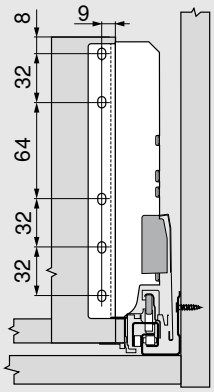

Cutting dimensions for 16 mm chipboard

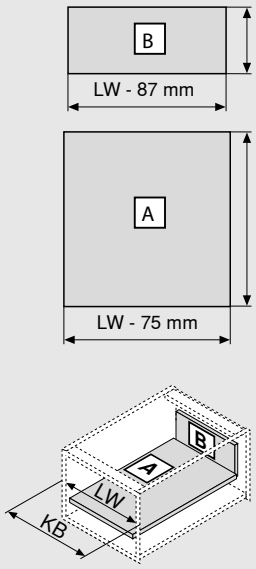

Chipboard back	B (mm)
Height M	84
Height K	116
Height C	167
Height D	199
Base length	**A (mm)**
Chipboard back	NL - 24

KB Cabinet width
LW Internal cabinet width
NL Nominal length

Note

For ordering information for standard TANDEMBOX components, please see the respective product brochures or the catalogue.

More information on TANDEMBOX antaro

www.blum.com/tandemboxantaro

Planning

Drawer

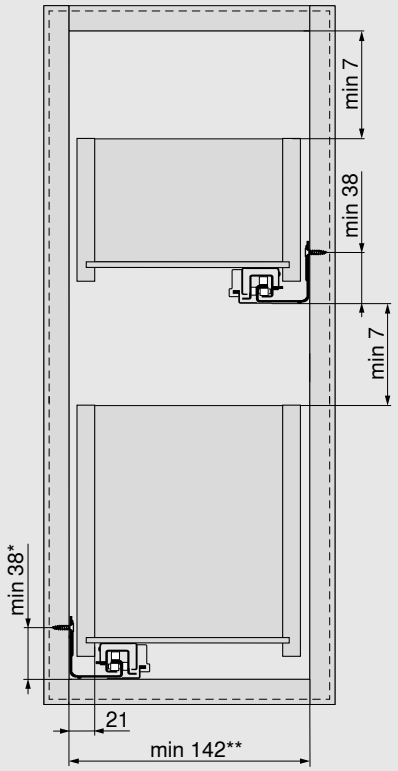

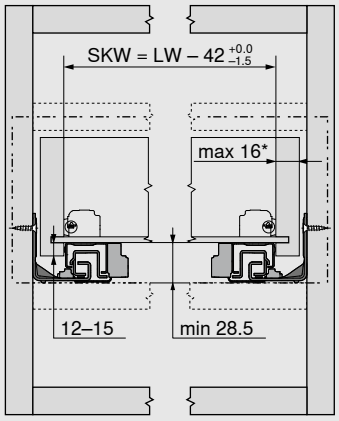

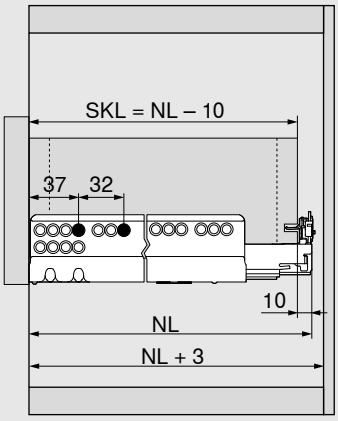

* + 1 mm if cabinet profile is installed before cabinet assembly

** 212 mm with TIP-ON BLUMOTION

* Limited side adjustment for a drawer side panel thickness of 16 mm, but with full tolerance utilisation of the internal drawer width

LW	Internal cabinet width
NL	Nominal length
SKL	Drawer depth
SKW	Internal drawer width

Planning

Drawer assembly

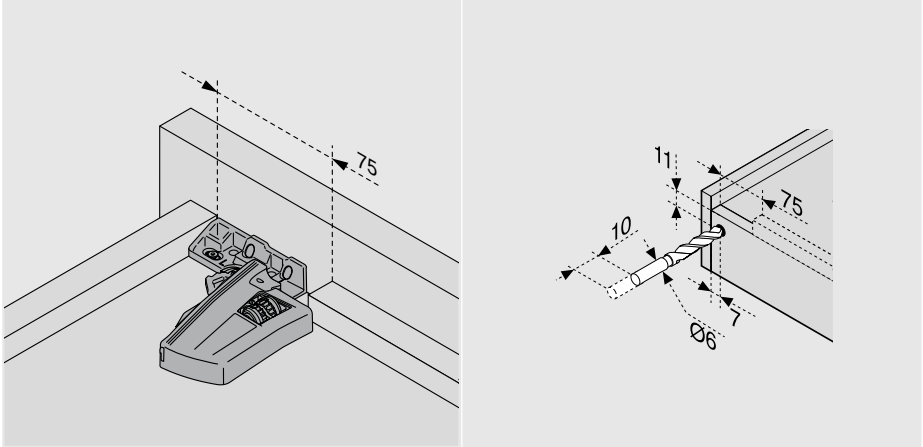

Note

For ordering information for standard MOVENTO components, please see the respective product brochures or the catalogue.

More information on MOVENTO

www.blum.com/movento

moving ideas

We believe that ideas can move the world. We offer innovative fittings, inspiring furniture concepts and appropriate services so that you can turn your creative ideas into reality. We are driven by your needs, international trends and our shared vision of a better quality of living. Let us work together to create moving ideas.

Quality of living

We would like you to enjoy greater convenience and functionality when using furniture.

Product range

Everything from a single source: our wide range of products allows you to keep up with today's and tomorrow's trends.

Inspiration

We monitor global trends and strive to create the solutions of tomorrow. We like to share our insights with you.

Innovation

We stay in motion. Curiosity and pioneering spirit drive us to develop new products and services for you.

Services

We support your daily operations with customised services tailored to your processes.

Quality

We continuously strive to improve our products, services and ourselves.

Trust

We take responsibility for partnerships, our employees, society and the environment.

Julius Blum started our journey in 1952 with horseshoe studs. Today we supply innovative fittings to customers in over 120 countries.

Look for our FSC™-certified products

FSC
www.fsc.org
FSC™ C115115

All content is copyrighted by Blum.
Subject to technical modifications and changes to the range without notice.
IDNR: 000.000.0 · EP-231/5 EN-MY/06.26

Blum Malaysia
A-2-3 & A-2-3A
Aurora Place Mall @ Bukit Jalil
Jalan Persiaran Jalil 1
Bandar Bukit Jalil
57000 KUALA LUMPUR
MALAYSIA
E-Mail: info.my@blum.com
www.blum.com

Julius Blum GmbH
6973 Höchst, Austria
Tel.: +43 5578 705-0
Fax: +43 5578 705-44
E-mail: info@blum.com
www.blum.com

Our sites in Austria, Poland and China are certified to the international standards mentioned below.
Our site in the USA is certified to ISO 9001.
Our site in Brazil is certified to ISO 9001, ISO 14001 and ISO 45001.

ISO 9001 Certified Quality System
ISO 14001 Certified Environmental System
ISO 50001 Certified Energy System

blum®