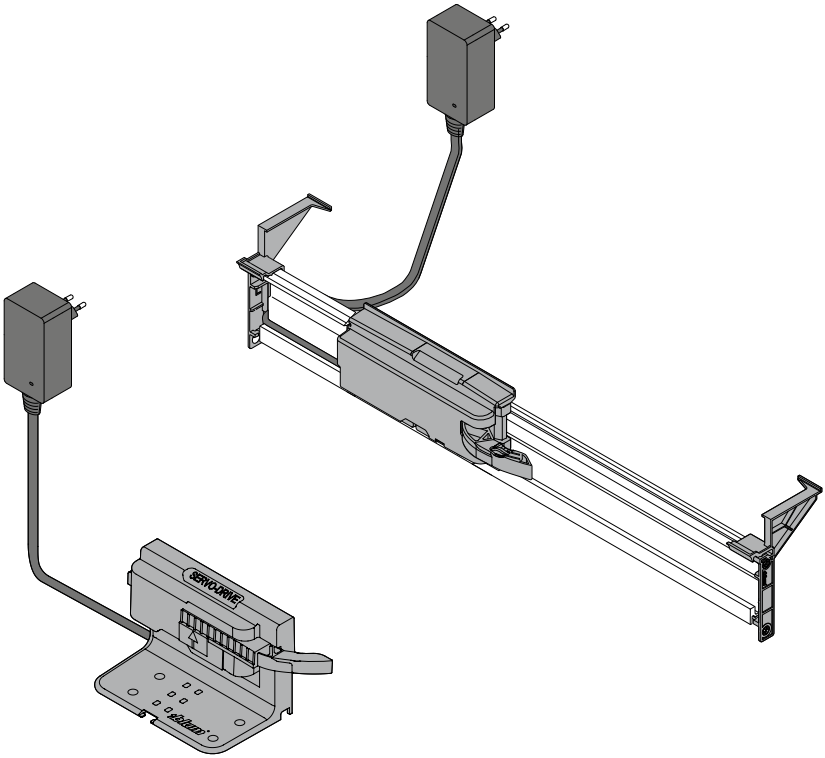

SERVO-DRIVE uno

EN

www.blum.com

Table of Contents

Warning signs and danger symbols 3
Safety 4
SERVO-DRIVE uno 10
Orientation diagram: bottom mount waste bin solutions 10
Orientation diagram: top mount waste bin solutions 10
Simplified EU Declaration of Conformity 12
Problems 12
Detailed information on the Machine Directive 12
Disposing of electrical and electronic appliances 13
Disposing of batteries 13
Technical data 14

About these instructions

Thank you for your purchase. SERVO-DRIVE, the electrical motion support system by Julius Blum GmbH, is a high-quality product that simplifies everyday kitchen tasks.

To safely enjoy the comfort of SERVO-DRIVE, please note the following:

- ➢ Carefully read the instruction leaflet before use.
- ➢ Please retain the instruction leaflet for the service life of SERVO-DRIVE.
- ➢ Please pass on this instruction leaflet to each subsequent owner or user of SERVO-DRIVE.
- ➢ Instructions are also available on our website. Please search on www.blum.com for "SERVO-DRIVE instruction leaflet" and download it as a PDF file.

Validity and target group

This instruction leaflet is intended for all users of SERVO-DRIVE. Assembly, adjustment, initial operation, maintenance and removal may only be carried out by qualified personnel according to the separate installation instructions.

Warning signs and danger symbols

WARNING indicates a danger that could lead to death or serious injury if not heeded.

NOTE



To identify an appliance intended only for indoor use.



To identify terminals that must not be connected to the mains voltage.

Intended use

SERVO-DRIVE uno supports the opening of drawers and may only be used under the following conditions:
• In dry, enclosed rooms.
• In conjunction with a SERVO-DRIVE plug-in power supply unit.

Technical data specifications can be found in the Blum sales documentation. For detailed information, please contact your distributor. Julius Blum GmbH accepts no liability for any other use.

Safety

Principle

SERVO-DRIVE complies with current safety standards. Nevertheless, there will still be certain residual risks if the information contained in this instruction leaflet is not observed. Please be aware that Julius Blum GmbH is not responsible for incidental or consequential damages that may arise due to non-compliance with this instruction leaflet.

Safety information

- The mains plug and the SERVO-DRIVE transformer must be easily accessible.
- Neither the SERVO-DRIVE transformer nor any cabling should come into contact with moving parts.
- This appliance can be used by children aged from 8 years and above and persons with reduced physical, sensory or mental capabilities or lack of experience and knowledge if they have been given supervision or instruction concerning use of the appliance in a safe way and understand the hazards involved. Children must not play with the appliance. Cleaning and user maintenance must not be carried out by children without supervision.
- The overall length of the cable for SERVO-DRIVE plug-in transformers Z10NA40x* must not exceed two metres.
- The SERVO-DRIVE transformer with functional earthing must be connected to an outlet with an earth connection.

* x = B, E, H, K, N, R, S, U, Z

Structural changes and spare parts

Structural changes and spare parts not approved by the manufacturer have an adverse effect on the safety and functionality of SERVO-DRIVE and are therefore not allowed.

- Use only original spare parts from Julius Blum GmbH.
- Do not connect any devices to the SERVO-DRIVE power supply unit other than the corresponding SERVO-DRIVE components.
- Only qualified technicians are permitted to modify SERVO-DRIVE components, in particular the cabling.
- Make sure that the Blum distance bumpers are fitted to the front.

NOTE

To ensure that drawers cannot be activated unintentionally, we recommended connecting the SERVO-DRIVE transformer to a switched outlet.
For more information, please consult an electrician.

SERVO-DRIVE transformer safety distance

NOTE

A safety distance of 30 mm must be maintained for air circulation; otherwise, there is a risk that the SERVO-DRIVE transformer could overheat.

Children

⚠ WARNING

Opening drawers may pose a risk of injury to children!

- ➢ Children should be properly supervised when in the room so that they do not play with the lift system.
- ➢ To ensure that SERVO-DRIVE is not triggered unintentionally, the switched outlet should be turned off.

Cabinet care and cleaning

⚠ WARNING

Danger of death from electric shock!

There is a danger of electric shock if fluids penetrate the SERVO-DRIVE transformer.

- ➢ Before cleaning the front, turn off the switched outlet to which the SERVO-DRIVE transformer is connected.
- ➢ Before cleaning the SERVO-DRIVE components, unplug the SERVO-DRIVE transformer.
- ➢ Make sure that no water or aggressive cleaning materials come into contact with the drive unit, the SERVO-DRIVE transformer or the SERVO-DRIVE switch while cleaning the cabinet – use a moist cloth.
- ➢ Never open a SERVO-DRIVE transformer, drive unit or SERVO-DRIVE switch.
- ➢ Any cabling damage should be immediately corrected by a qualified specialist.
- ➢ Do not cover the SERVO-DRIVE transformer with cloths or other items – danger of overheating.
- ➢ Examine the appliance frequently for signs of wear or damage. If there are such signs or if the appliance has been misused or does not work, contact the supplier for further information

SERVO-DRIVE transformers

SERVO-DRIVE transformers provide power to the drive unit. SERVO-DRIVE transformer function can be checked via the operating mode indicator (LED).

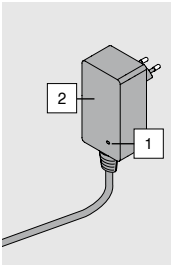

1 Operating mode display (LED)
2 Serial tag

NOTE

- ➢ Improper use may cause SERVO-DRIVE for pull-out systems to wear prematurely!
- ➢ Do not press or pull with force against the movement direction when opening or closing the drawer.

限用物質含有情況標示聲明書 Declaration of the Presence Condition of Restricted Substances			限用物質及其化學符號 Restricted substances and its chemical symbols					
設備名稱. Equipment name:	型號(型式). Type designation (Type):	單元. Unit:	鉛 Lead (Pb)	汞 Mercury (Hg)	鎘 Cadmium (Cd)	六價鉻 Hexavalent chromium (Cr^{+6})	多溴聯苯 Polybrominated biphenyls (PBB)	多溴二苯醚 Polybrominated diphenyl ethers (PBDE)
電源適配器	Z10Uyyyx "x" ϵ {B,E,H, K,N,R,S,U,Z}	電子元件 + 印刷電路板 Electronic components+PCB	○	○	○	○	○	○
		外殼 Housing	○	○	○	○	○	○
		輸出線材 Output cable	○	○	○	○	○	○
		交流電輸入端子 AC Input Pin	—	○	○	○	○	○

備考1. "超出0.1 wt %"及"超出0.01 wt %"係指限用物質之百分比含量超出百分比含量基準值.
Note 1: "Exceeding 0.1 wt. %" and "exceeding 0.01 wt %" indicate that the percentage content of the restricted substance is exceeding the reference percentage value of presence condition.

備考2. "○" 係指該項限用物質之百分比含量未超出百分比含量基準值.
Note 2: "○" indicates that the percentage content of the restricted substance does not exceed the percentage of reference value of presence.

備考3. "—" 係指該項限用物質為排除項目.
Note 3: "—" indicates that the restricted substance corresponds to the exemption.

SERVO-DRIVE uno

SERVO-DRIVE uno supports the opening of drawers.

Orientation diagram: bottom mount waste bin solutions

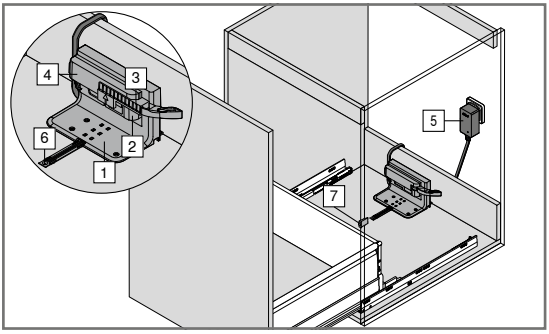

SERVO-DRIVE unit pre-mounted:

1. Attachment bracket
2. Drive unit
3. Transport protection
4. Protection against dripping water
5. Blum transformer including cable
6. Assembly device
7. Blum-Distance bumper

SERVO-DRIVE uno for TANDEMBOX

Orientation diagram: top mount waste bin solutions

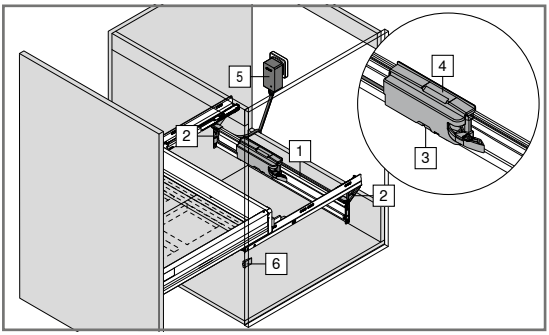

SERVO-DRIVE unit pre-mounted:

1. Bracket profile horizontal
2. Bracket profile adapter
3. Drive unit
4. Protection against dripping water
5. Blum transformer including cable
6. Blum-Distance bumper

Electrical motion support system

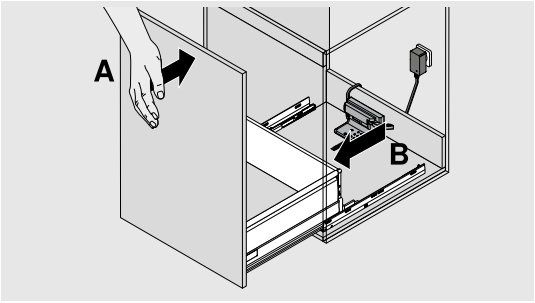

When the front and/or handle of the drawer (A) is pulled or pressed, the eject lever of the drive unit (B) swivels forward and opens the drawer a short distance.

Leaning protection

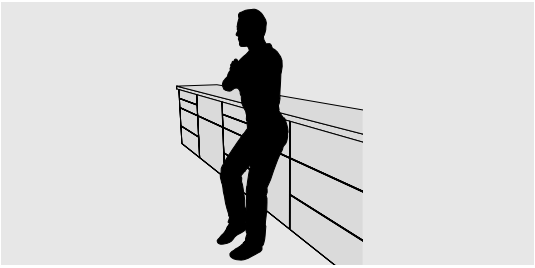

The electrical opening support function is only triggered by a brief touch or pull. Leaning on the drawer, for example, will not open it.

The following parameters must be observed to ensure the error-free functioning of SERVO-DRIVE:

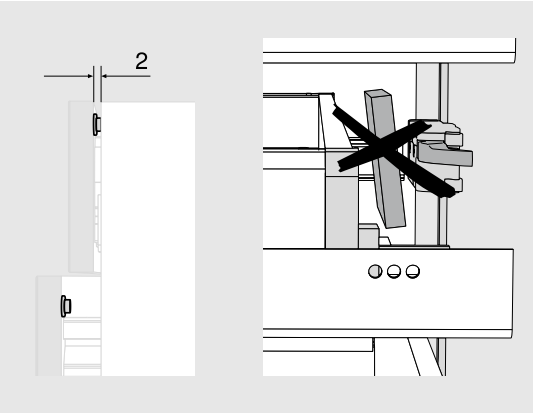

- Blum distance bumpers must be attached to the front to ensure the required triggering signal (2 mm) between the pull-out unit and the cabinet.
- No items can be clamped between the pull-out unit and the cabinet back and/or SERVO-DRIVE.

Simplified EU Declaration of Conformity

Julius Blum GmbH hereby declares that all types of electrical and electronic components of Julius Blum GmbH conform to the Directive 2011/65/EU.
Julius Blum GmbH hereby declares that the Blum transformer types Z10NA40x* and Z10NE040 conform to the Directive 2014/35/EC and Directive 2014/30/EU.

The complete text of the EU declaration of conformity is available at the following Internet address:
www.blum.com/compliance

Problems

www.blum.com/sd/troubleshooting

Detailed information on the Machine Directive

www.blum.com/sd/guideline

* x = B, E, H, K, N, R, S, U, Z

Disposing of electrical and electronic appliances

Electrical and electronic appliances must not be disposed of with household waste at the end of their service life. Ask your local authority for information on how to proceed. Blum electrical and electronic appliances meet the requirements of the WEEE Directive 2012/19/EU. Electrical and electronic appliances are collected separately, which enables old appliances to be reused or recycled, and their materials to be reused. This is intended to prevent any hazardous materials that may be contained in the appliances from damaging the environment and health during disposal. In most cases, the entire appliance does not need to be disposed of according to the WEEE guidelines, but only the part that is equipped with electrical components. Please refer to the disassembly instructions for information on this. There are free collection points for returning electrical and electronic appliances in your area. You will find further information on this under the following link: **www.blum.com/recycling**

Disposing of batteries

Batteries must not be disposed of with household waste at the end of their service life. Ask your local authority for information on how to proceed. Batteries used at Blum meet the requirements of the Battery Directive 2006/66/EC. Batteries are collected separately, which enables the batteries or their materials to be recycled. This is intended to prevent any hazardous materials that may be contained in the appliances from damaging the environment and health during disposal. Please refer to the disassembly instructions for information on removing batteries. There are free collection points for returning batteries in your area. Please avoid shorting the contact surfaces when disposing of batteries.
You will find further information on this under the following link: **www.blum.com/recycling**

Supplier's Declaration of Conformity
47 CFR § 2.1077 Compliance Information

Unique Identifier

Product-Family: SERVO-DRIVE
Product-Types: Z10Uyyyx | x ϵ {B, E, H, K, N, R, S, U, Z}

Responsible Party-U.S. Contact Information

Blum Inc.
7733 Old Plank Rd.
Stanley, North Carolina
28164

Mr. Christopher Muck
Email: chris.muck@blum.com

FCC Compliance Statement

This device complies with Part 15 of the FCC Rules. Operation is subject to the following two conditions: (1) This device may not cause harmful interference, and (2) this device must accept any interference received, including interference that may cause undesired operation.

Technical data

The appliances must only be used in dry, closed rooms. All SERVO-DRIVE appliances are of protection class III and must only be supplied with safety extra-low voltage (SELV). They are only to be used with the transformers provided by Blum.

SERVO-DRIVE plug-in power supply unit Z10NA40x*

Input voltage:	100–240 V AC / 50–60 Hz
Input current:	2.0 A
Output voltage:	24.0 V DC
Output current:	1.0 A
Output power:	24.0 W
Average active efficiency:	≥ 86.4 %
Efficiency at low load (10%):	≥ 77.0 %
No-load power consumption:	≤ 0.10 W
Ambient conditions:	
Transport / Storage:	-30 to +70 °C / 0 to 90 % r.H.
Operation:	0 to +40 °C / 5 to 80 % r.H. non condensing
Maximum altitude:	4000 m (at an ambient temperature of 25 °C)
Protection category:	IP40 (if cable end protector is inserted)

* x = B, E, H, K, N, R, S, U, Z

SERVO-DRIVE drive unit for LEGRABOX / MERIVOBOX /TANDEMBOX / MOVENTO / TANDEM Z10A3000.04, Z10A3000.50

Supply voltage: ..... 24.0 V DC
Rated current: ..... 2.0 A
Power consumption in standby mode: ..... ≤ 0.15 W (front closed)
Operating mode: ..... S3 5 % (max. 10 motions/10 min.)
Emission sound pressure level: ..... < 70 dB(A)
Ambient conditions:
- Transport / Storage: ..... -30 to +70 °C / 0 to 90 % r.H.
- Operation: ..... 0 to +40 °C / 5 to 80 % r.H. non condensing
- Maximum altitude: ..... 4000 m (at an ambient temperature of 25 °C)

Protection category: IP20

Blum partners worldwide can be found at:
www.blum.com/addresses

Look for our FSC™-certified products

FSC™ C115115 www.fsc.org

BA-140/5 · 06.25 · © Copyright by Blum

Julius Blum GmbH
6973 Höchst, Austria
Tel.: +43 5578 705-0
Fax: +43 5578 705-44
E-mail: info@blum.com
www.blum.com

Our sites in Austria, Poland and China are certified
to the international standards mentioned below.
Our site in the USA is certified to ISO 9001.
Our site in Brazil is certified to ISO 9001, ISO 14001 and ISO 45001.

ISO 9001 Certified Quality System
ISO 14001 Certified Environmental System
ISO 50001 Certified Energy System

blum®